TECHNICAL CATALOGUE TK 502/22 EN

ZX2

Gas-insulated medium voltage switchgear

Table of contents

1. Introduction **6**

2. Applications **7**

3. Characteristics **8**

4. Your benefit **9**

5. Technical data **10**–14
5.1. Technical data of the panel 10
5.2. Technical data of the circuit-breaker 13
5.3. Technical data of the disconnector and three position disconnector 14

6. Fundamental structure of the panels **15**–21

7. Components **22**–54
7.1. Vacuum circuit-breaker 24
7.2. Three position disconnector 28
7.3. Disconnector 31
7.4. Optional view ports 33
7.5. Busbar 34
7.6. Inner cone termination system 36
7.6.1. Connection of cables 36
7.6.2. Connection of fully insulated bars 37
7.6.3. Connection of surge arresters 37
7.7. Outer cone termination system 38
7.8. Main earthing bar 39
7.9. Test sockets 39
7.10. Capacitive voltage indicator systems 40
7.11. Current and voltage transformers and sensors 41
7.11.1. Ring core current transformers 42
7.11.2. Block-type transformers and block-type sensors 43
7.11.3. Current transformers 44
7.11.4. Earth fault transformers 44
7.11.5. Dimensioning of current transformers 45
7.11.6. Current sensors 46
7.11.7. Voltage transformers 47
7.11.8. Voltage sensors 48
7.12. Protection and control units 49
7.13. Insulating gas 50
7.14. Gas system in the panels 51
7.15. Gas density sensor 52
7.16. Pressure relief systems 53
7.17. Surface treatment 54

8. Supply range **55**–85
8.1. Panels in single busbar design 55
8.1.1. Feeder panels 55
8.1.1.1. Incoming and outgoing feeder panels with inner cone cable connection system 55
8.1.1.2. Incoming and outgoing feeder panels with outer cone cable connection system 57
8.1.1.3. Panels with operating currents over 3150 A and up to 5000 A 61
8.1.1.4. Cable termination panels 63
8.1.1.4.1. Cable termination panels with innercone cable plug system 63
8.1.1.4.2. Cable termination panels with outer cone cable connection system 64
8.1.2. Busbar sectionaliser panels 65
8.1.2.1. Sectionaliser within a switchgear block 65
8.1.2.1.1. Version 1 65
8.1.2.1.2. Version 2 67
8.1.2.2. Sectionaliser using cables (connection of two system blocks) 68
8.1.3. Metering panels 68
8.2. Panels in double busbar design 70
8.2.1. Feeder panels 70
8.2.1.1. Incoming and outgoing feeder panels with inner cone cable connection system 70

8.2.1.2. Incoming and outgoing feeder panels with outer cone cable connection system 72
8.2.1.3. Cable termination panels 76
8.2.2. Coupling panels 77
8.2.2.1. Sectionaliser within a switchgear block 77
8.2.2.2. Sectionaliser using cables (connection of two system blocks) 78
8.2.2.3. Bus coupler 78
8.2.3. Bus sectionaliser 79
8.2.4. Metering panels 80
8.3. Design to order panels 82
8.4. Panels with rated currents > 2000 A 83
8.4.1. Incoming feeders with rated currents > 2000 A 83
8.4.2. Busbar current > 2500 A 84
8.4.3. Sectionalizers and bus couplers with rated currents > 2000 A 85

—

9. Arrangement of panels with an operating current greater than 2000 A and panels with integrated busbar measurement 86

—

10. Busbar earthing 87
10.1. Earthing the busbar by means of an earthing set 87
10.2. Earthing the busbar by means of a sectionaliser and riser or bus coupler 87

—

11. Building planning 88–100
11.1. Site requirements 88
11.2. Space required 89
11.3. Minimum aisle widths and emergency exits 90
11.4. Minimum room heights 91
11.5. Hazardous area for pressure relief to the outside 92
11.6. Floor opening and cable axes 93
11.7. Foundation frames 96
11.8. False floor 97
11.9. Earthing of the switchgear 98
11.9.1. Design of earthing systems with regard to touch voltage and thermal stress 98
11.9.2. EMC-compliant earthing of the switchgear 98
11.9.3. Recommendations on configuration of the switchgear earthing 98
11.10. Panel weights 100

12. Non-standard operating conditions 101

1. Introduction

Switchgear systems and their components rank among the most important facilities for electrical power transmission and distribution. Their versatile functions and the opportunities they provide contribute on the one hand to safety in general, and on the other hand they secure the availability of electrical energy.

Our ZX product family consists of the following switchgear types.

Product types	U_r	I_r	I_k
ZX0:	...24 kV	...1250 A	...25 kA
ZX0.2:	...36 kV	...2500 A	...31.5 kA
ZX1.2:	...40.5 kV	...2500 A	...31.5 kA
ZX2:	...40.5 kV	...3150 A	...40 kA

The product family covers the entire spectrum of primary distribution applications.

Flexible combination, reliability, availability and economy are the attributes that make it easy for our clients in industry and utilities to decide in favor of products from the ZX series. Together with complete conventional solutions, the use of digital protection and control technology, sensor systems and plug-in connections makes ZX systems unrestrictedly fit for the future, and the primary function of reliable power distribution is fulfilled with no ifs and buts. This is ensured by ABB's uncompromising approach to quality, which leaves no customer's wishes unfulfilled. Aligned to each need, the product types of the ZX family offer a solution for each requirement. In over 70 countries the customers rely on gas-insulated switchgears from ABB.

ABB is engaged in the development of environmentally friendly products which consume fewer resources throughout their life cycle and protect the climate. The contribution to the greenhouse effect of SF_6 emissions from gas-insulated medium voltage switchgear is relatively small. Nevertheless, the impact on the climate is reduced by using an alternative insulating gas.

—

ABB is the first manufacturer worldwide to supply gas-insulated medium voltage switchgear with the new, ecologically efficient insulating gas AirPlus™.

AirPlus has a global warming potential of less than 1. In order to give users the choice of insulating technology to meet their own requirements, ABB supplies switchgear of type ZX2 with three options.

ZX2
For users with an economic focus, the tried and tested ZX2 continues to be available. With its low leakage rate and SF_6 handling in a closed circuit, the effects on global warming are kept on a low level.

ZX2 Ready for AirPlus
Users who want to be prepared for the future can order their new ZX2 "ready for AirPlus". The panels are then filled with SF_6 at the works and tested for full compatibility with AirPlus. Whenever you want to change over, remove the SF_6 and fill the panels with the insulating gas AirPlus.

ZX2 AirPlus
For users with a green focus, ZX2 AirPlus is the product of choice. The new insulating gas AirPlus with a global warming potential of less than 1 makes no contribution to the greenhouse effect. At the same time, the use of AirPlus permits the same compact dimensions and advantages.

2. Applications

Utilities
- Coal, gas and oil power plants
- Onshore and offshore wind farms
- Solar farms
- Transmission substations
- Distribution substations

Industry
- Steel works
- Paper manufacturing
- Cement industry
- Chemicals industry
- Automobile industry
- Petrochemicals
- Pipeline systems
- Electronics and semiconductor manufacturing
- Mining

Transport
- Airports
- Harbors
- Railways
- Underground railways

Building and infrastructure
- Data centers
- Supermarkets
- Shopping centers
- Hospitals

3. Characteristics

Basic characteristics
- SF_6 (Sulphur hexafluoride) or AirPlus as insulating gas
- Hermetically sealed pressure systems
- Switchgear with a leakage rate of less than 0.1% per annum
- Integral leak testing of the panels at the facory
- Single and double busbar design
- Stainless steel encapsulation, manufactured from laser cut sheet material
- Modular structure
- Indoor installation

Characteristics of SF_6-insulated panels
- Rated voltages up to 36 kV (40.5 kV)
- Up to 3150 A and 40 kA
- Up to 5000 A in single busbar design
- Also suitable for site altitudes over 1000 m above sea level

Characteristics of AirPlus-insulated panels
- Rated voltages up to 36 kV
- Up to 2000 A and 31.5 kA

Panel variants
- Incoming and outgoing feeder panels
- Cable termination panels
- Termination panels for fully insulated bars
- Sectionaliser panels
- Riser panels
- Metering panels
- Double feeder panels
- Customised panel versions

Circuit-breaker, disconnector and three position disconnector
- Vacuum circuit-breaker
- Disconnector with functions for:
  - Busbar connection
  - Disconnection
- Disconnector / earthing switch (three position disconnector) with functions for:
  - Busbar connection
  - Disconnection
  - Earthing

Connections
- Inner cone cable plug system in sizes 2 and 3 to EN 50180 and EN 50181
- Outer cone cable connection system to EN 50181, type C
- Connection facility for surge arresters

Current and voltage metering
- Instrument transformers and sensors

Protection and control
- Combined protection and control devices
- Discrete protection devices with conventional control

Protection against maloperation
- Electrical switch interlocks
- Optional: additional mechanical interlocks

Pressure relief
- Via pressure relief ducts into the switchgear room
- Via pressure relief ducts to the outside

Installation
- Panels joined together by plug-in connectors

4. Your benefit

Maximum operator safety

- All live components are enclosed to prevent accidental contact.
- As the high voltage compartments are independent of external influences (degree of protection IP65), the probability of a fault during operation is extremely low.
- As evidenced by arc fault testing, our switchgear systems are notable for maximum operator safety.
- A further increase in operator safety can be achieved by providing pressure relief to the outside the switchgear room.

Minimum overall costs

- The compact design of the panels reduces the space required and therefore the size of the station. The result is a lower investment requirement.
- Freedom from maintenance is achieved by constant conditions in the high voltage compartments in conjunction with the selection of suitable materials. The injurious influences of dust, vermin, moisture, oxidation and contaminated air in the high voltage compartments are precluded, as the gastight compartments are filled with SF_6 or AirPlus. As a rule, therefore, isolation of the switchgear to perform maintenance work is not required.
- The panels are designed for an expected service life of over 40 years.
- The systematic selection during the development process of the materials used provides for complete recycling or reuse of those materials at the end of the service life.
- The panels only leave our production facilities after documented routine testing. Thanks to the plug-in technology applied in the areas of the busbars, cables and secondary systems, extremely short installation times are possible.
- No gas work is required as a rule at site. There is thus no need to evacuate and fill the high voltage compartments, test them for leakage and measure the dew point of theinsulating gas at site.

Maximum availability

- The plug-in busbar technology without screw couplings permits simple and therefore safe assembly.
- In spite of the extremely low failure probability of the ZX switchgear systems, replacement of components in the gas compartments and therefore a rapid return to service after repairs is possible.
- In gas-insulated switchgear, earthing of switchgear sections is performed by a high quality vacuum circuit-breaker.
- The circuit-breaker can close onto a short-circuit significantly more frequently and reliably than a positively making earthing switch.

5. Technical data

5.1. Technical data of the panel

—

Table 5.1.1.: Technical data of the panel

				IEC-ratings			Special ratings(1)
Panels with inner cone cable connection system and all other panel variants without cable connection	Rated voltage	U_r	kV	12	24	36	40.5
	Maximum operating voltage		kV	12	24	36	40.5
	Rated power frequency withstand voltage	U_d	kV	28	50	70	85
	Rated lightning impulse withstand voltage	U_p	kV	75	125	170	200
	Rated normal current	I_r	A			...3150(2)	
	Rated short-time withstand current	I_k	kA			...40(3)	
	Rated peak withstand current	I_p	kA			...100(4)	
	Rated duration of short-circuit	t_k	s			...3	
Panels with outer cone cable connection system	Rated voltage	U_r	kV	12	24	36	
	Maximum operating voltage		kV	12	24	36	
	Rated power frequency withstand voltage	U_d	kV	28	50	70	
	Rated lightning impulse withstand voltage	U_p	kV	75	125	170	
	Rated normal current	I_r	A		...2500		
	Rated short-time withstand current	I_k	kA		...40(3)		
	Rated peak withstand current	I_p	kA		...100(4)		
	Rated duration of short-circuit	t_k	s		...3		
Double feeder panel with outer cone cable connection system, panel width 2 x 400 mm	Rated voltage	U_r	kV	12	24		
	Maximum operating voltage		kV	12	24		
	Rated power frequency withstand voltage	U_d	kV	28	50		
	Rated lightning impulse withstand voltage	U_p	kV	75	125		
	Rated normal current	I_r	A		...630		
	Rated short-time withstand current	I_k	kA		...25		
	Rated peak withstand current	I_p	kA		...62.5		
	Rated duration of short-circuit	t_k	s		...3		
	Rated frequency	f_r	Hz			50(5)	
Single busbar system	Rated normal current of busbars	I_r	A			...5000(2)	
Double busbar system						...3150(2)	

1. SF_6 - insulated
2. AirPlus-insulated: 2000 A
3. AirPlus-insulated: 31.5 kA
4. AirPlus-insulated: 80 kA
5. 60 Hz see section “Non standard operating conditions”

Insulating gas system([1,2])			
Alarm level for insulation	p_{ae}	kPa([3])	120
Rated filling level for insulation	p_{re}	kPa	130
Degree of protection for gas filled compartments			IP65
Degree of protection of low voltage compartment			IP4X([4])
Ambient air temperature, maximum		°C	+40([5])
Ambient air temperature, maximum 24 hour averages		°C	+35([5])
Ambient air temperature, minimum		°C	-5
Site altitude		m	...1000([6])

1.Insulating gas: SF_6 or AirPlus
2. All pressures stated are absolute pressures at 20 °C
3. 100 kPa = 1 bar
4. Higher degrees of protection on request
5. Higher ambient air temperature on request
6. Higher site altitude see section “Non standard operating conditions”

Internal arc classification
The panels are arc fault tested in accordance with IEC 62271-200.

—
Table 5.1.2: Internal arc classification of the switchgear in accordance with IEC 62271-200

Panels with panel width 600 mm, 800 mm and 840 mm	Classification IAC	AFLR
	Internal arc	40 kA 1 s
Double feeder panel with outer cone cable connection system, panel width 2 x 400 mm	Classification IAC	AFLR
	Internal arc	25 kA 1 s

Key to table 5.1.2.:

IAC — Internal arc classification
AFLR
- Accessibility from the rear (R - rear)
- Accessibility from the sides (L - lateral)
- Accessibility from the front (F - front)
- Switchgear installed in closed rooms with access restricted to authorized personnel only

With pressure relief into the switchgear room, the IAC qualification requires a switchgear installation consisting of at least four panels. If a pressure relief duct leading to the outside is used, at least two panels are required for the IAC qualification.

Loss of service continuity to IEC 62271-200
The various LSC categories of the standard define the possibility to keep other compartments and / or panels energized when opening a main circuit compartment.

Gas-filled compartments cannot be opened, as they would then lose their functionality. This means that there is no criterion for loss of service continuity of inaccessible compartments.

—
Table 5.1.3.:
Loss of service continuity of the switchgear

Loss of service continuity of the switchgear	LSC2A

Key to table 5.1.3.:
LSC2A: On access to the cable terminations of a panel, the busbar and all other panels can remain energized.

Note from VDE 0671-200:2012-08 / IEC 62271-200 Edition 2.0:
The LSC category does not describe ranks of reliability of switchgear and control gear.

Partition class to IEC 62271-200
The partition class to IEC 62271-200 defines the nature of the partition between live parts and an opened, accessible compartment.

—
Table 5.1.4.:
Partition class in accordance with IEC 62271-200

Partition class	PM

Key to table 5.1.4:
PM: partition of metal

Panels of partition class PM provide continuous metallic and earthed partitions between opened accessible compartments and live parts of the main circuit.

5.2. Technical data of the circuit-breaker

—

Table 5.2.1: Technical data of the circuit-breaker

				IEC ratings		Special ratings
Rated voltage	U_r	kV	12	24	36	40.5
Maximum operating voltage		kV	12	24	36	40.5
Rated power frequency withstand voltage(1)	U_d	kV	28	50	70	85
Rated lightning impulse withstand voltage(1)	U_p	kV	75	125	170	200
Rated frequency(2)	f_r	Hz			50	
Rated normal current(3)	I_r	A			...3150	
Rated short-circuit breaking current	I_{SC}	kA			...40	
Rated short-circuit making current	I_{ma}	kA			...100	
Rated short-time withstand current	I_k	kA			...40	
Rated duration of short-circuit	t_k	s			...3	
Operating sequence			O - 0.3 s - CO - 3 min - CO(4)			
Closing time	t_{cl}	ms			ca. 60	(5)
Rated opening time	t_3	ms			≤ 45	(5)
Rated break time	t_b	ms			≤ 60	(5)
Rated auxiliary voltage		V DC			60, 110, 220 (6)	
Power consumption of charging motor		W			max. 260	
Power consumption of closing coil		W			250 - 310	
Power consumption of opening coil		W			250 - 310	
Power consumption of blocking magnet		W			10	
Power consumption of undervoltage release		W			11	
Power consumption of indirect overcurrent release		W			15	

Permissible numbers of operating cycles of the vacuum interrupters	
20000 - 30000(7) × I_r	(I_r = Rated normal current)
50 × I_{SC}	(I_{SC} = Rated short-circuit breaking current)

Classification according IEC 62271-100	
All circuit-breakers for panels with a width of 600 mm and above, Cable and line charging	C2(8), E2, M2

1. Higher levels to international standards on request
2. Rated current for 60 Hz on request
3. Higher operating currents on request
4. Different operating sequences on request
5. Times for > 36 kV, 40 kA circuit-breakers on request
6. Different auxiliary voltages on request
7. Dependent on the vacuum circuit-breaker
8. Back-to-back capacitor switching on request

5.3. Technical data of the disconnector and three position disconnector

—

Table 5.3.1: Technical data of the disconnector and the three position disconnector

				IEC ratings		Special ratings
Rated voltage	U_r	kV	12	24	36	40.5
Maximum rated voltage		kV	12	24	36	40.5
Rated power frequency withstand voltage across the isolating distance		kV	32	60	80	(1)
Rated lightning impulse withstand voltage across the isolating distance		kV	85	145	195	(1)
Rated normal current(2)	I_r	A			...3150	
Rated short-time withstand current	I_k	kA			...40	
Rated peak withstand current	I_p	kA			...100	
Rated duration of short-circuit	t_k	s			...3	
Rated auxiliary voltage	U_a	V DC		60, 110, 220(3)		

Rated normal current(2)	A	...1250	...3150
Power consumption of operating mechanism motor	W	approx. 180	
Motor running time on opening or closing the disconnector(4)	s	approx. 18	approx. 20
Motor running time on opening or closing the earthing switch(4)	s	approx. 18	approx. 20

Classification according IEC 62271-102
E0, M1 (2000 operating cycles)

1. On request
2. Higher operating currents on request
3. Different auxiliary voltages on request
4. At rated auxiliary voltage

6. Fundamental structure of the panels

—
Fig. 6.1:
Outgoing cable panel 1250 A, single busbar at front

—
Fig. 6.2:
Outgoing cable panel 2000 A, single busbar at rear

—
Fig. 6.3:
Outgoing cable panel 2000 A, double busbar

Modular structure
Each feeder panel consists of the circuit-breaker compartment A, one or two busbar compartments B, the cable termination compartment C, the pressure relief duct for the circuit breaker compartment and for the cable termination compartment D, one or two pressure relief ducts for the busbar compartments E and the low voltage compartment F. The circuit-breaker compartment and the busbar compartments are filled with gas. There are no gas connections between the two or three compartments or to gas compartments in adjacent panels.

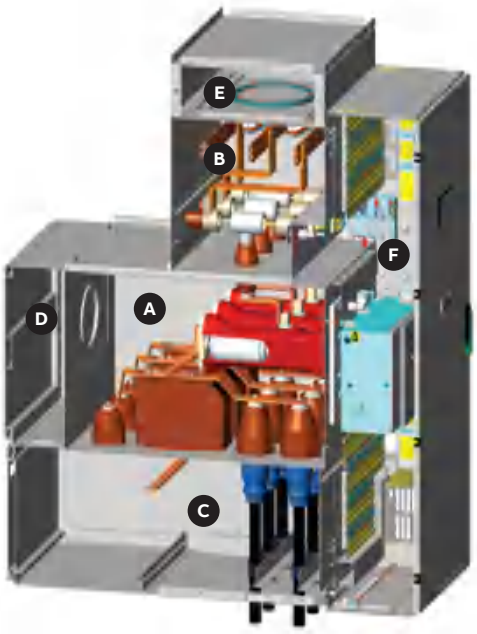

—
Fig. 6.1

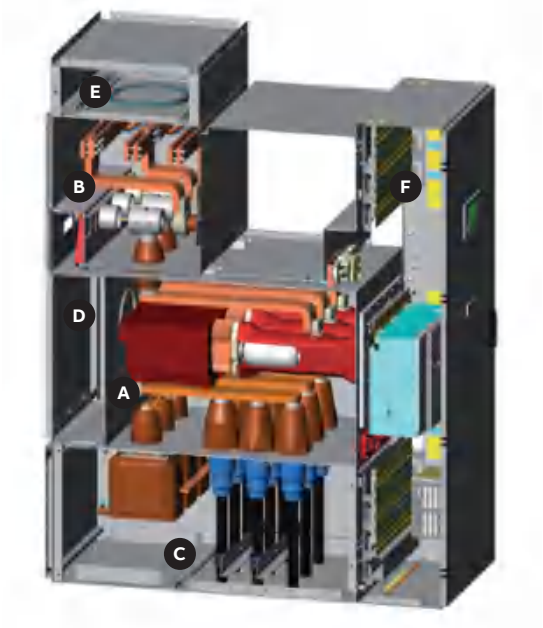

—
Fig. 6.2

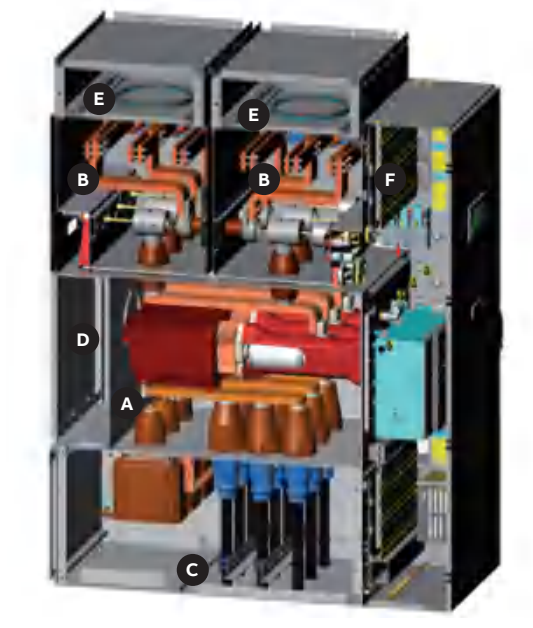

—
Fig. 6.3

—
Fig. 6.4:
Circuit-breaker compartment with block type transformer, 1250 A

The circuit-breaker compartment A
The cable (1.3) and test plug sockets (1.4) and the circuit-breaker poles (1.1) are located in the circuit-breaker compartment.

The current-carrying connection between the circuit-breaker and the three position disconnector respectively the disconnector in the busbar compartment is effected via single pole cast resin bushings (1.12).

There are two basic versions of circuit-breaker compartments available:
- Current detection by blocktype transformers or sensors (fig. 6.4) with max. two cable sockets per phase
- Current detection by current transformer (fig. 6.5)

Sockets (1.4) for plug-in voltage transformers or sensors are located underneath the circuit-breaker compartment. When voltage transformers / sensors are removed the sockets can be used as test sockets. If no voltage transformers or sensors are used the sockets are sealed and insulated with blanking plugs.

The pressure relief disk (1.13) of the circuit-breaker compartment is located in the rear wall of the enclosure. The circuit-breaker operating mechanism (1.2), the gas density sensor (1.10) and the filling valve (1.11) are located on the circuit-breaker mounting (1.14) which is bolted to the front wall of the enclosure.

The seals of the components are o-ring seals which are not exposed to any UV radiation.

The circuit-breaker compartments in systems consisting of several panels have no gas connections to the neighbouring panels, nor is there any gas connection to the busbar compartments located above the circuit-breaker compartments.

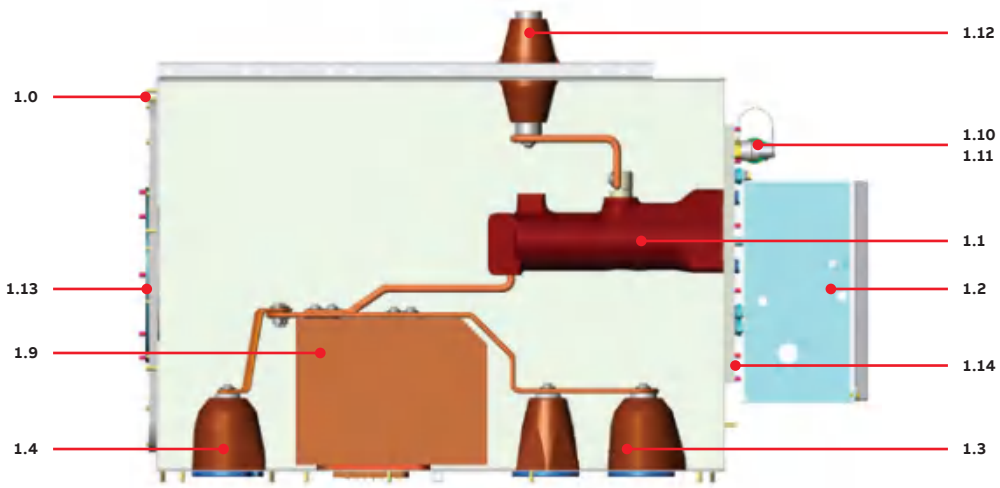

1.0 Circuit-breaker compartment (enclosure)
1.1 Circuit-breaker pole
1.2 Circuit-breaker operating mechanism
1.3 Cable socket
1.4 Test socket (also for use with other plug-in devices)
1.9 Block-type transformer
1.10 Gas density sensor for circuit-breaker compartment
1.11 Filling valve for circuit-breaker compartment
1.13 Cast resin bushing to busbar
1.13 Pressure relief disk
1.14 Mounting plate
Insulating gas SF_6 or AirPlus

—
Fig. 6.5:
Circuit-breaker compartment with current transformer, 2000 A

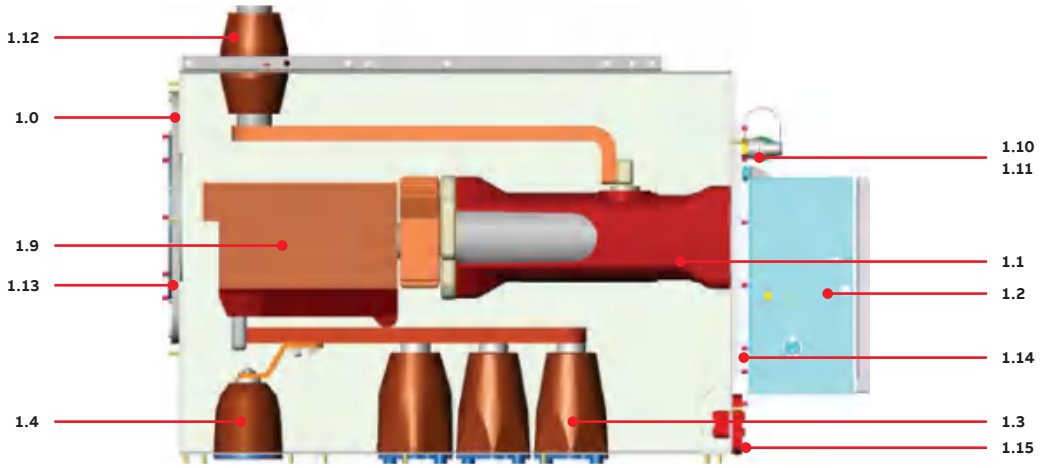

1.0 Circuit-breaker compartment (enclosure)
1.1 Circuit-breaker pole
1.2 Circuit-breaker operating mechanism
1.3 Cable socket
1.4 Test socket (also for use with other plug-in devices)
1.9 Current transformer
1.10 Gas density sensor for circuit-breaker compartment
1.11 Filling valve for circuit-breaker compartment
1.12 Cast resin bushing to busbar
1.13 Pressure relief disk
1.14 Mounting plate
1.15 Bushing for current transformer secondary wiring
Insulating gas SF_6 or AirPlus

The busbar compartment B

The busbar compartment (figs. 6.6 and 6.7) consists of the busbar system (2.1), which is connected to the single-pole cast resin bushings (1.12) below via flat conductors (2.10) and the three position disconnector (2.3) or disconnector (2.4).

The pressure relief disk (1.13) of the busbar compartment is located in the roof of the enclosure.

Front busbar compartment

The operating mechanism (2.5) of the three position disconnector (2.3), the gas density sensor (2.7) and the filling valve (2.8) are located on the front wall of the enclosure.

Rear busbar compartment

The operating mechanism (2.5) of the disconnector (2.4), the gas density sensor (2.7) and the filling valve (2.8) are located on the rear wall of the enclosure. Emergency manual operation of the disconnector is effected from the low voltage compartment.

As a rule, the front busbar compartment contains a three position disconnector (with earthing function). The rear busbar compartment of the single busbar version also contains a three position disconnector. In the double busbar version the rear busbar compartment of cable termination panels contains a disconnector with no earthing function.

As with the circuit-breaker compartment, the seals on the components are o-ring seals which are not exposed to any UV radiation.

The busbar connection to the adjacent panels is effected by plug-in connectors (2.2) located at either side of the enclosure. The busbar compartments in switchgears consisting of several panels have no gas connections with the neighbouring panels, nor is there any gas connection to the circuit-breaker compartment located below the busbar compartments.

—
Fig. 6.6:
Front busbar compartment B, 1250 A

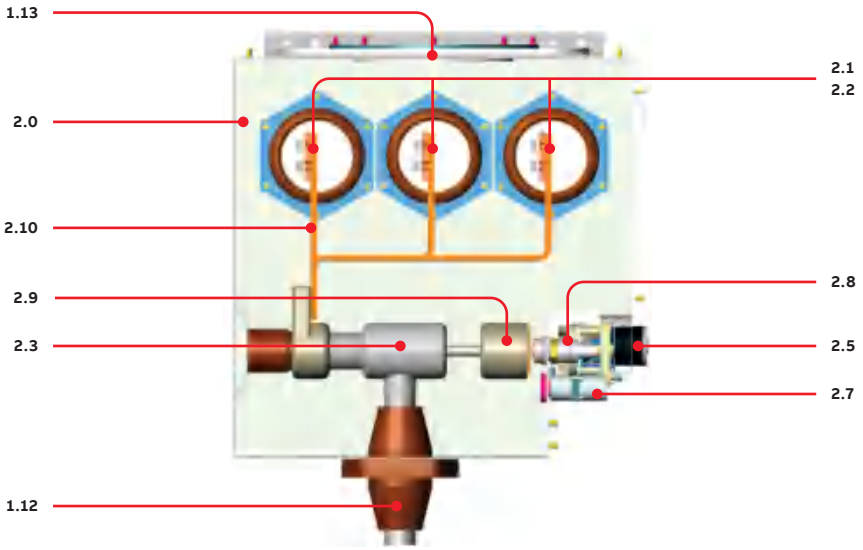

1.12 Cast resin bushing
1.13 Pressure relief disk
2.0 Busbar compartment (enclosure)
2.1 Busbar system
2.2 Plug-in busbar connector
2.3 Three position disconnector
2.5 Three position disconnector operating mechanism
2.7 Gas density sensor for busbar compartment
2.8 Filling valve for busbar compartment
2.9 Earthing contact
2.10 Flat conductor
Insulating gas SF_6 or AirPlus

—
Fig. 6.7: Rear busbar compartment B, Double busbar, 2000 A

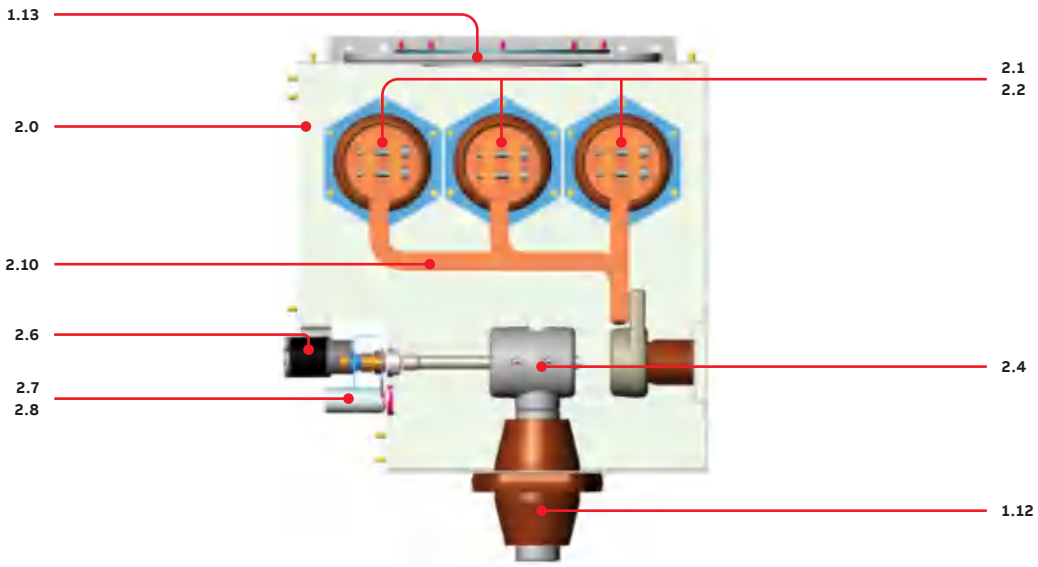

1.12 Cast resin bushing
1.13 Pressure relief disk
2.0 Busbar compartment (enclosure)
2.1 Busbar system
2.2 Plug-in busbar connector
2.4 Disconnector
2.6 Disconnector operating mechanism
2.7 Gas density sensor for busbar compartment
2.8 Filling valve for busbar compartment
2.10 Flat conductor
Insulating gas SF_6 or AirPlus

The cable termination compartment C and rear pressure relief duct D

The cable termination compartment (fig. 6.8) constitutes a support frame for the panel manufactured from bended zinc-plated sheet metal.

The cable termination compartment contains the main earthing bar (3.5), the high voltage cables (3.2) with fitted cable plugs (3.1), and cable fasteners (3.3) and, where appropriate, surge arresters or voltage transformers.

An nonmagnetic floor plate (3.6), split for cable installation, serves to partition the cable termination compartment off from the cable basement. The cable termination compartment is metal-enclosed on all sides and protected against accidental contact. The installation access at the rear of the cable termination compartment is closed off by a detachable plate.

In the unlikely event of an arc fault in the cable termination or circuit-breaker compartments, pressure is relieved through the rear pressure relief duct (4.0).

—
Fig. 6.8: Cable termination compartment C and rear pressure relief duct D

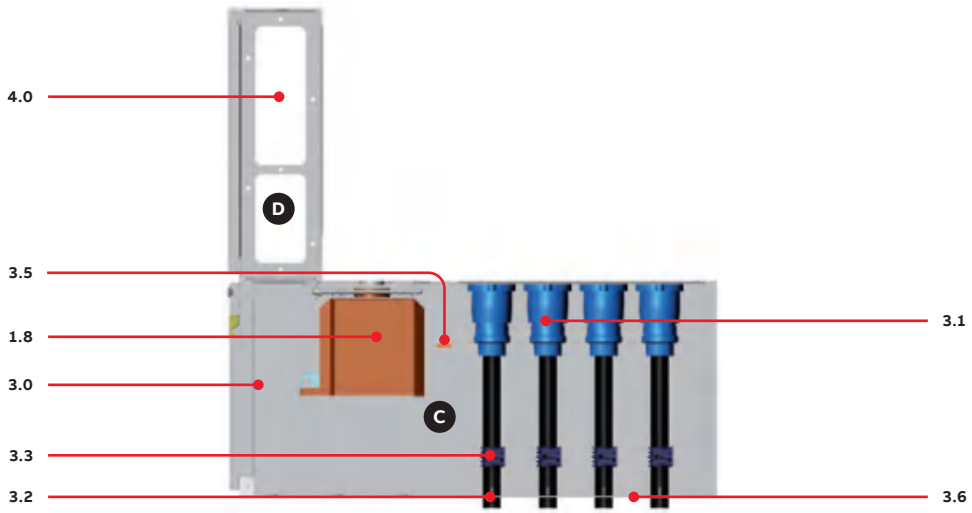

1.8 Voltage transformer
3.0 Cable termination compartment C
3.1 Cable plug
3.2 High voltage cable
3.3 Cable fastener
3.5 Main earthing bar (mounted on the circuit-breaker enclosure)
3.6 Floor plate
4.0 Rear pressure relief duct D

—
Fig. 6.9:
Low voltage compartment F

The pressure relief system for the busbar - compartment E

The upper pressure relief system serves to discharge the pressure in the unlikely event of an internal arc fault in the busbar compartment.

The low voltage compartment F

The circuit-breaker operating mechanism (1.2), the operating mechanism for the three position disconnector (2.5), sensors for gas density monitoring in the gas compartments (1.10 and 2.7), protection devices and further secondary devices and their wiring are located in the low voltage compartment (fig. 6.9).

The entry for external secondary cables (6.5) is located in the base plate of the low voltage compartment. As a rule the low voltage compartment depth amounts to 500 mm.

1.2 Circuit-breaker operating mechanism
1.10 Gas density sensor for circuit-breaker compartment
1.11 Filling valve for circuit-breaker compartment
1.14 Circuit-breaker mounting plate
2.5 Three position disconnector operating mechanism
2.7 Gas density sensor for front busbar compartment
2.8 Filling valve for front busbar compartment
6.0 Low voltage compartment
6.1 Central unit of a combined protection and control device
6.2 Human-machine interface of a combined protection and control device
6.3 Opening for loop lines
6.4 Wiring section
6.5 Secondary cable entry
6.6 Low voltage compartment door

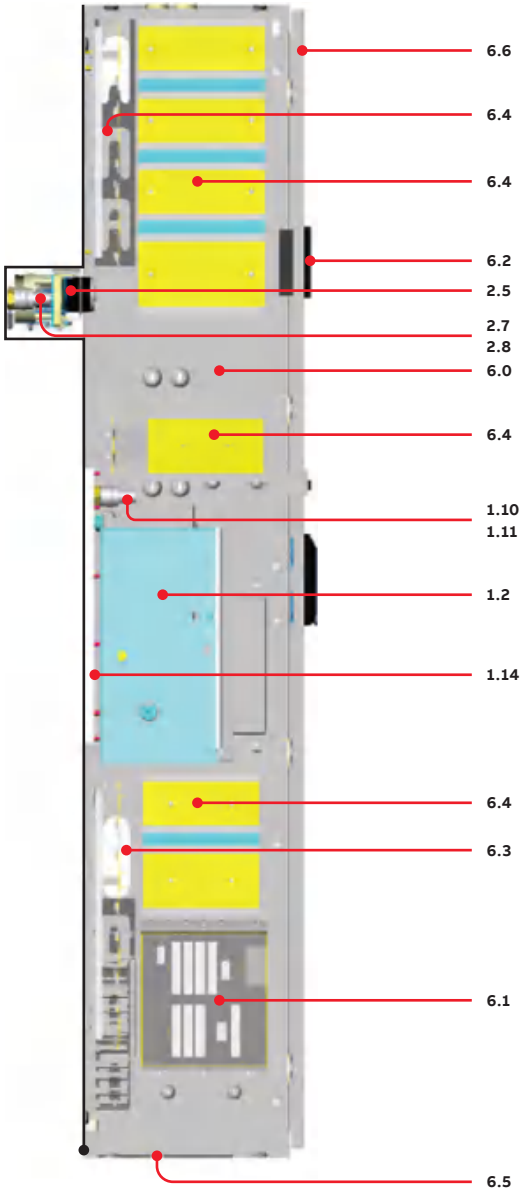

7. Components

—
Fig. 7.1:
Feeder panel 2000 A with inner cone cable connection system and current and voltage transformers

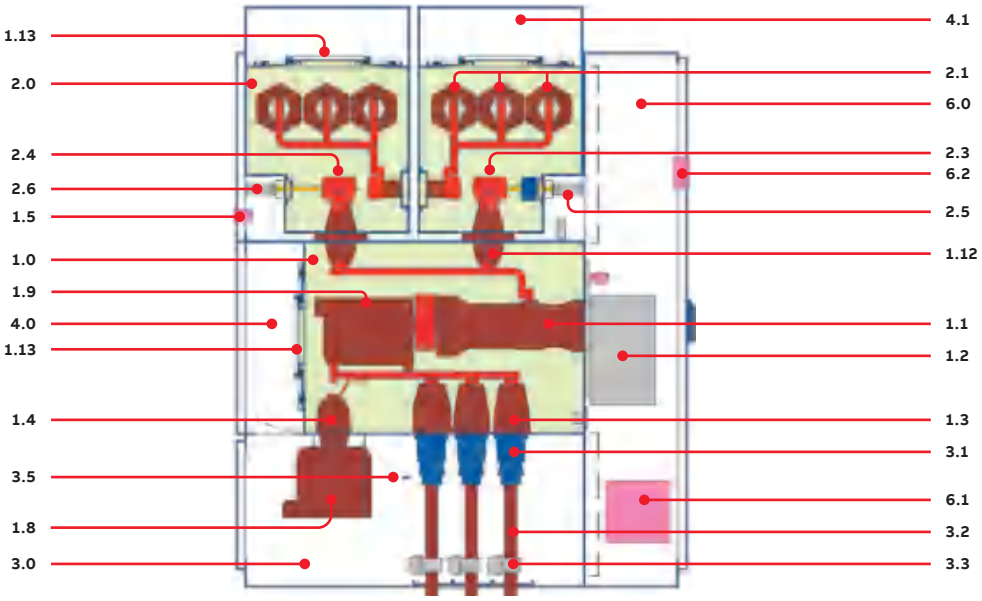

—
Fig. 7.2:
Feeder Panel with outer cone cable connection system and current and voltage sensors, 1250 A

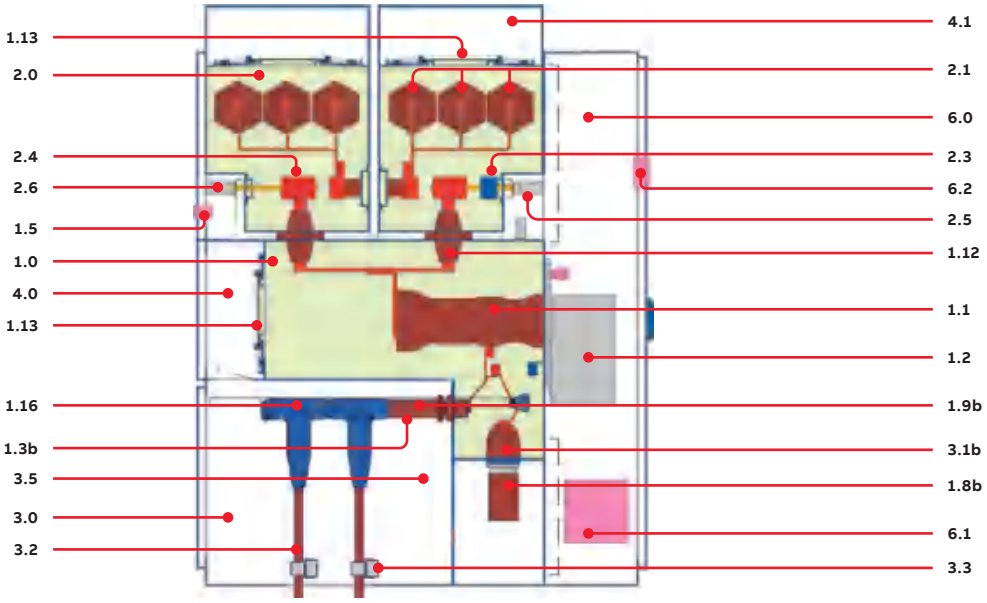

1.0 Circuit-breaker compartment
1.1 Circuit-breaker pole
1.2 Circuit-breaker operating mechanism
1.3 Cable socket
1.3b Outer cone
1.5 Capacitive voltage indicator system
1.8 Voltage transformer
1.8b Voltage sensor
1.9 Current transformer
1.9b Current sensor
1.12 Bushing, circuit-breaker / busbar compartment
1.13 Pressure relief disk
1.16 Cable connector
2.0 Busbar compartment
2.1 Busbar system
2.3 Three position disconnector
2.4 Disconnector
2.5 Three position disconnector operating mechanism
2.6 Disconnector operating mechanism
3.0 Cable termination compartment
3.1 Cable plug
3.1b Socket for voltage sensor
3.2 High voltage cable
3.3 Cable fastener
3.5 Main earthing bar
4.0 Pressure relief duct, rear (for circuit-breaker compartment and cable termination compartment)
4.1 Pressure relief duct, top (for busbar compartment)
6.0 Low voltage compartment
6.1 Central unit of a combined protection and control device
6.2 Human-machine interface of a combined protection and control device
Insulating gas SF_6 or AirPlus

—
Fig. 7.1.1:
Vacuum circuit-breaker

—
Fig. 7.1.2:
Vacuum interrupter

7.1. Vacuum circuit-breaker

The fixed mounted vacuum circuit-breakers (fig. 7.1.1) are three phase switching devices and fundamentally consist of the operating mechanism and the three pole parts. The pole parts contain the switching elements proper, the vacuum interrupters.

The pole parts are installed on a common mounting plate. The operating mechanism is on the opposite side from the mounting plate. In this way, the pole parts, mounting plate and operating mechanism form a single assembly. The mounting plate for this assembly is screwed to the front wall of the circuit-breaker compartment in a gas-tight manner at the works.

The pole parts are located in the circuit-breaker compartment which is filled with insulating gas, and are therefore protected from external influences. The operating mechanism is located in the low voltage compartment and is therefore easily accessible

Functions of the vacuum circuit-breaker

- Switching operating current on and off
- Short-circuit breaking operations
- Earthing function in conjunction with the three position disconnector.

For earthing, the three position disconnector prepares the connection to earth while in the de-energized condition. Proper earthing is performed by the circuit-breaker. A circuit-breaker functioning as an earthing switch is of higher quality than any other earthing switch.

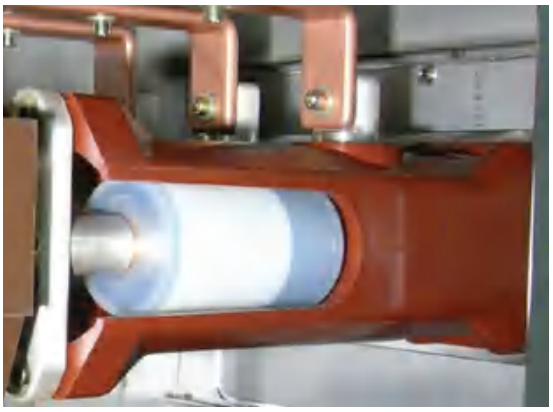

—
Fig. 7.1.1

Vacuum interrupter

The outer casing of the vacuum interrupter (fig. 7.1.2) consists of ceramic insulators 1, whose ends are sealed off by stainless steel lids 2. The contacts 4 5 surrounded by the potentialfree centre screen 3 are made of copper / chromium composite. As a consequence of the extremely low static pressure of less than 10^{-4} to 10^{-8} hPa inside the interrupter chamber, only a relatively small contact gap is required to achieve a high dielectric strength. The switching motion is transmitted into the enclosed system of the vacuum interrupter via a metal bellows 6. An antirotation element 7 is fitted to protect the metal bellows from torsion and to guide the conductor leading to the moving contact. The connection to the operating mechanism is effected by a threaded pin 8 fastened in the feed conductor.

If contacts through which current is flowing are opened in a vacuum, a metal vapor arc arises under short-circuit conditions. This arc creates the charge carriers required to conduct the current inside the vacuum interrupter. The arc is extinguished at the first natural zero of the alternating current after switch-off, i.e. after separation of the contacts. With the rapid reestablishment of the contact gap in the vacuum, the current flow is then securely interrupted.

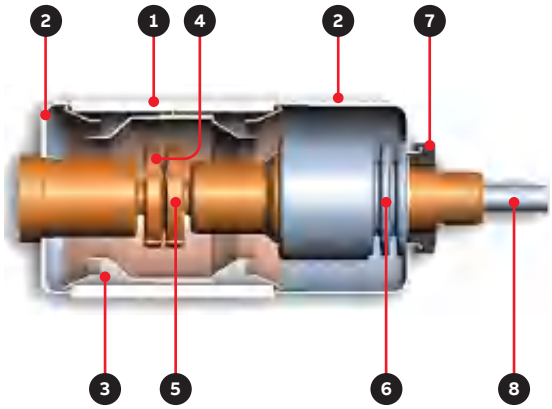

—
Fig. 7.1.2

—
Fig. 7.1.3:
Pole part and operating mechanism

Pole parts (fig. 7.1.3)
The interrupter 9 inside the pole part is embedded in cast resin or located in a cast resin pole tube 10. With the breaker closed, the current flows from breaker terminal 11 to the fixed contact in the vacuum interrupter, and from there via the moving contact to breaker terminal 12. The operating motions are effected by insulated actuating rods 8.

Circuit-breaker operating mechanism
The circuit-breaker operating mechanism (fig. 7.1.3, item 13) is connected to the pole parts via gas-tight thrust bushings 14.

The circuit-breaker is equipped with a mechanical stored-energy spring mechanism. The stored-energy spring can be charged either manually or by a motor. Opening and closing of the device can be performed by means of mechanical pushbuttons or by electrical releases (closing, opening and undervoltage releases).

The operating mechanism can be configured for autoreclosing and, with the short motor charging times involved, also for multi-shot autoreclosing.

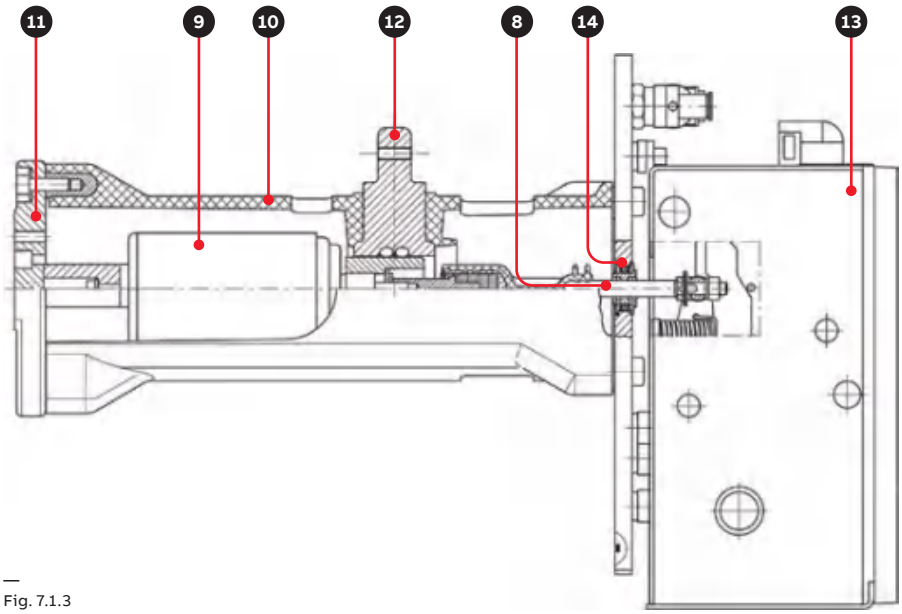

—
Fig. 7.1.3

—
Fig. 7.1.4:
Controls for the circuit-breaker operating mechanism

—
Fig. 7.1.5a:
Optional locking device for mechanical push-buttons on the circuit-breaker. Example: OFF button enabled for operation

—
Fig. 7.1.5b:
Optional locking device for mechanical push-buttons on the circuit-breaker. Example: OFF button secured

The front of the operating mechanism (fig. 7.1.4) accommodates the mechanical on 1 and off 2 pushbuttons, the receptacle for manual charging of the stored-energy spring 3, the mechanical indicators for “Circuit-breaker ON” “Circuit-breaker OFF” 4, “Stored-energy spring charged”, “Stored-energy spring discharged” 5, an operating cycle counter 6 and the name plate for the circuit-breaker 7.

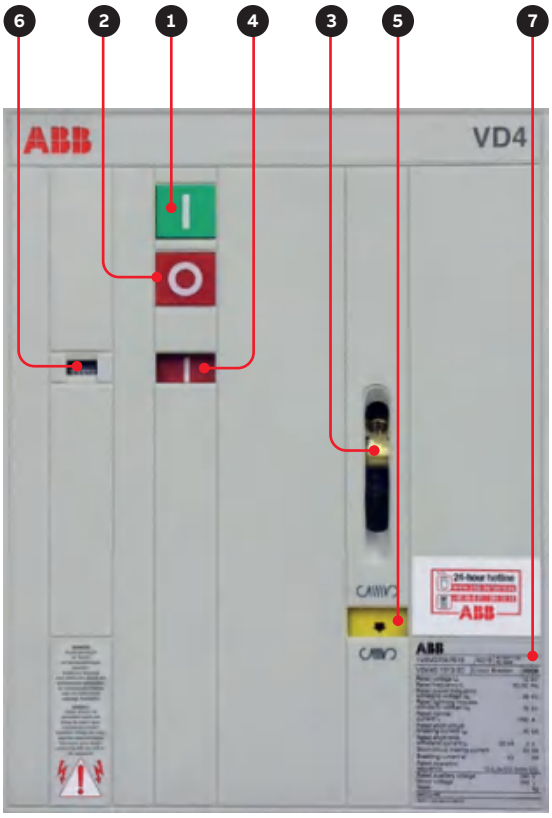

—
Fig. 7.1.4

The mechanical push-buttons can optionally be fitted with a locking device (fig. 7.1.5). When this option is selected, both buttons can be secured separately with padlocks.

—
Fig. 7.1.5a

—
Fig. 7.1.5b

Secondary equipment for the circuit-breaker operating mechanism

Table 7.1.1 shows the secondary equipment for the circuit-breaker operating mechanism in an outgoing feeder panel. The “Standard” column indicates the equipment necessary for control of the panel. Over and above this, the use of further devices such as additional auxiliary switches is possible as an option to meet your specific requirements.

—

Table 7.1.1: Secondary equipment for the circuit-breaker operating mechanism in feeder panels

IEC designation	VDE designation	Equipment	Standard	Option
-MAS	-M0	Charging motor for operating mechanism	•	
-BGS1([1])	-S1	Auxiliary switch “Spring charged”	•	
-MBO1	-Y2	Shunt release OFF	•	
-MBC	-Y3	Shunt release ON	•	
-BGB1	-S3	Auxiliary switch “CB ON / OFF”	•	
-BGB2([2])	-S4	Auxiliary switch “CB ON / OFF”	•	
-BGB3([2])	-S5	Auxiliary switch “CB ON / OFF”		•
-KFN	-K0	Anti-pumping device	•	
-RLE1	-Y1	Blocking magnet “CB ON”	•	
-BGL1	-S2	Auxiliary switch for blocking magnet	•	
-BGB4	-S7	Fleeting contact ≥ 30 ms for C.B. tripped indication		•
-MBU([3])	-Y4	Undervoltage release		•
-MBO3([3])	-Y7	Indirect overcurrent release		•
-MBO2	-Y9	2nd shunt release OFF		•

1. For certain versions of the circuit-breaker, auxiliary switches BGS1.1...1.5 are used.
2. For certain versions of the circuit-breaker, the auxiliary switch may not be required. In such cases the function is performed by auxiliary switch - BGB1.
3. Combination of -MBU with -MBO3 is not possible.

—
Fig. 7.2.1:
Three position disconnector in disconnector ON position

—
Fig. 7.2.2:
Partial view of the three position disconnector in the central position

—
Fig. 7.2.3:
Partial view of the three position disconnector in the earthing switch ON position (optional reed contact switched on by permanent magnet)

7.2. Three position disconnector

The three position disconnectors are combined disconnectors and earthing switches. The three switch positions, connecting, disconnecting and earthing, are clearly defined by the mechanical structure of the switch. Simultaneous connection and earthing is therefore impossible.

The three position disconnectors are motor-operated rod-type switches whose live switching components are located in the busbar compartment, while the mechanism block is easily accessible in the low voltage compartment.

The switch (fig. 7.2.1) has its disconnected position in the central position. In the disconnector ON and earthing switch ON limit positions, the moving contact (sliding part) driven by an insulating spindle reaches the fixed contacts (disconnector contact or earthing contact) which are fitted with one or two spiral contacts.

Optional series connected reed contacts (= switches operated by permanent magnets) detect the correct positions of the three contacts in the earthing switch ON position (figs. 7.2.2 and 7.2.3).

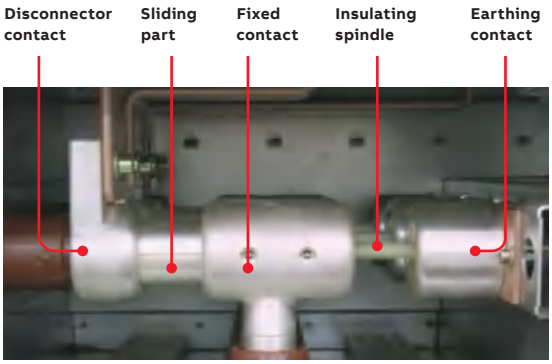

—
Fig. 7.2.1

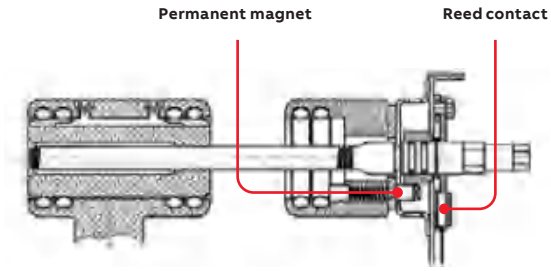

—
Fig. 7.2.2

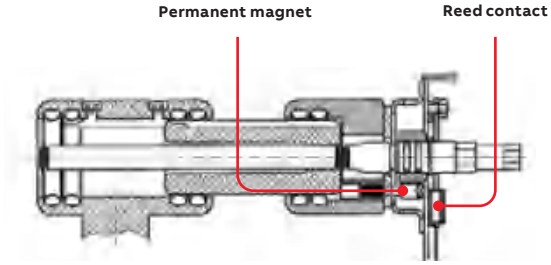

—
Fig. 7.2.3

—
Fig. 7.2.4:
Three position disconnector operating mechanism

—
Fig. 7.2.5:
Closed mechanical access interlock for emergency manual operation

—
Fig. 7.2.6:
Opened mechanical access interlock for emergency manual operation

Three position disconnector operating mechanism

The operating mechanism block for the three position disconnector consists of the following functional groups (fig. 7.2.4 to 7.2.6):

- Drive motor
- Functional unit with micro switches and auxiliary switches for position detection
- Mechanical position indicator
- Mechanical access interlock for emergency manual operation
- Hand crank receptacle for emergency manual operation.

The various options for secondary equipment in the operating mechanism variants can be found in table 7.2.1.

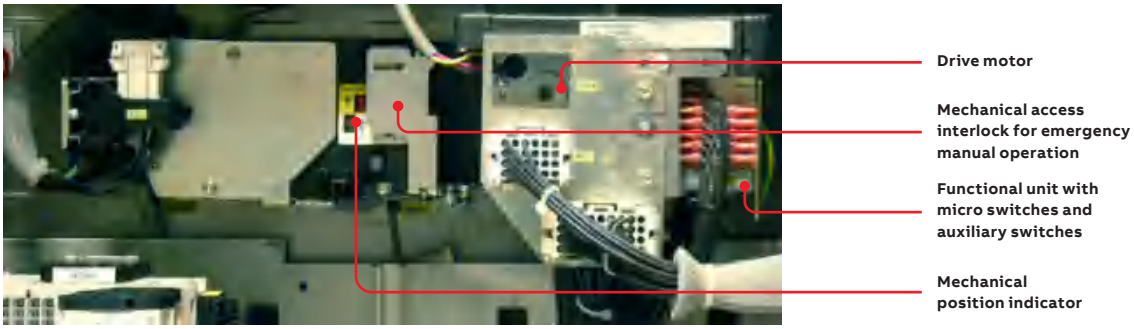

—
Fig. 7.2.4

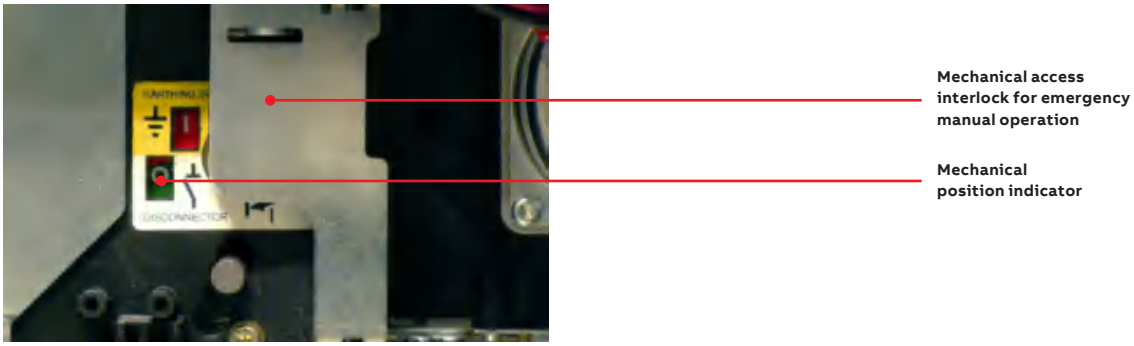

—
Fig. 7.2.5

—
Fig. 7.2.6

Secondary equipment for the three position disconnector operating mechanism

Table 7.2.1 shows the secondary equipment for the three position disconnector operating mechanism in an outgoing feeder panel. The "Standard" column indicates the equipment necessary for control of the panel. Over and above this, the use of further devices such as additional auxiliary switches is possible as an option to meet your specific requirements.

—

Table 7.2.1: Secondary equipment for the three position disconnector operating mechanism in feeder panels

IEC designation	VDE designation	Equipment	Standard	Option
-MAD	-M1	Drive motor	•	
-BGI15	-S15	Microswitch to detect switch position "Disconnector OFF"	•	
-BGI16	-S16	Microswitch to detect switch position "Disconnector ON"	•	
-BGE57	-S57	Microswitch to detect switch position "Earthing switch OFF"	•	
-BGE58	-S58	Microswitch to detect switch position "Earthing switch ON"	•	
-BGI1	-S11	Auxiliary switch to detect switch position "Disconnector OFF"	•	
-BGI1	-S12	Auxiliary switch to detect switch position "Disconnector ON"	•	
-BGE5	-S51	Auxiliary switch to detect switch position "Earthing switch OFF"	•	
-BGE5	-S52	Auxiliary switch to detect switch position "Earthing switch ON"	•	
-BGE3.1/2/3	-B5E1/2/3	Reed contacts to detect the "Earthing switch ON" switch position		•
-BGL1 -BGL2	-S151 -S152	Microswitch for access blocking of hand crank receptacle for emergency manual operation		•

—
Fig. 7.3.1:
Disconnector in ON position

—
Fig. 7.3.2:
Rear part of the disconnector operating mechanism with drive motor on the back of the panel

—
Fig. 7.3.3:
Front part of the disconnector operating mechanism in the low voltage compartment. The operating mechanism of the three position disconnector is located above the disconnector operating mechanism

—
Fig. 7.3.4:
Closed mechanical access interlock for emergency manual operation

—
Fig. 7.3.5:
Opened mechanical access interlock for emergency manual operation

7.3. Disconnector

Except for the lack of an earthing contact the design of the disconnector is the same as that of the three position disconnector. Accordingly the two switch positions are “connect” and “disconnect”.

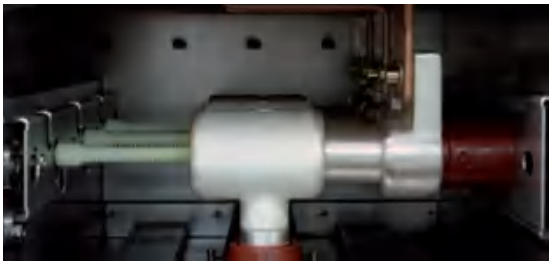

—
Fig. 7.3.1

—
Fig. 7.3.2

—
Fig. 7.3.3

The two-part operating mechanism of the disconnector consists of the following functional groups (figs. 7.3.2 to 7.3.5):

- Drive motor
- Functional unit with micro switches and auxiliary switches for position detection
- Mechanical position indicator
- Mechanical access interlock for emergency manual operation
- Hand crank receptacle for emergency manual operation

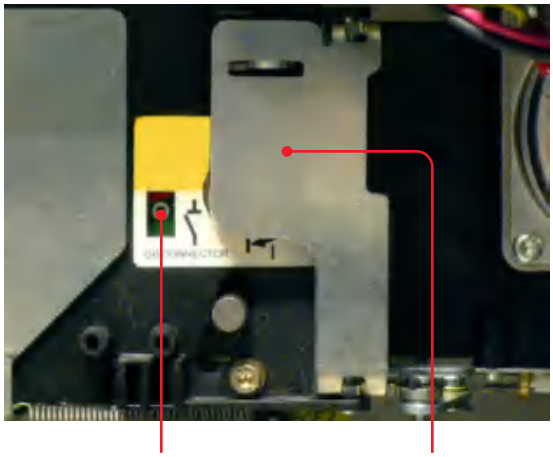

—
Fig. 7.3.4

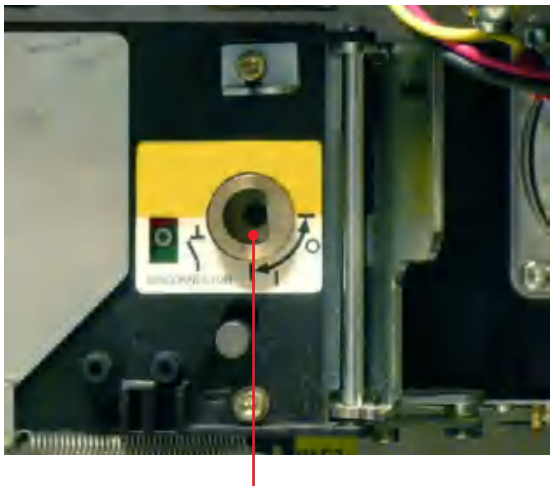

—
Fig. 7.3.5

Secondary equipment for the disconnector
Table 7.3.1 shows the secondary equipment for the disconnector operating mechanism in an outgoing feeder panel. The “Standard” column indicates the equipment necessary for control of the panel. Over and above this, the use of further devices such as additional auxiliary switches is possible as an option to meet your specific requirements.

—
Table 7.3.1: Secondary equipment for the disconnector operating mechanism in feeder panels

IEC designation	VDE designation	Equipment	Standard	Option
-MAD	-M1	Drive motor	•	
-BGI15	-S15	Microswitch to detect switch position “Disconnector OFF”	•	
-BGI16	-S16	Microswitch to detect switch position “Disconnector ON”	•	
-BGI1	-S11	Auxiliary switch “Disconnector OFF”	•	
-BGI1	-S12	Auxiliary switch “Disconnector ON”	•	
-BGL1 -BGL2	-S151 -S152	Microswitch for (optional) access blocking of hand crank receptacle for emergency manual operation		•

—
Fig. 7.4.1:
Position of the optional view ports shown in the example of a double busbar panel

7.4. Optional view ports

The busbar compartments can be equipped with optional view ports to allow operators to verify the switching positions of the three position disconnector and the disconnector visually.

The view ports for the front busbar compartment are located in the low voltage compartment, and those for the rear busbar compartment are located in the cover of the busbar compartment at the rear of the panel (fig. 7.4.1). The view ports will be covered by a slide mechanism.

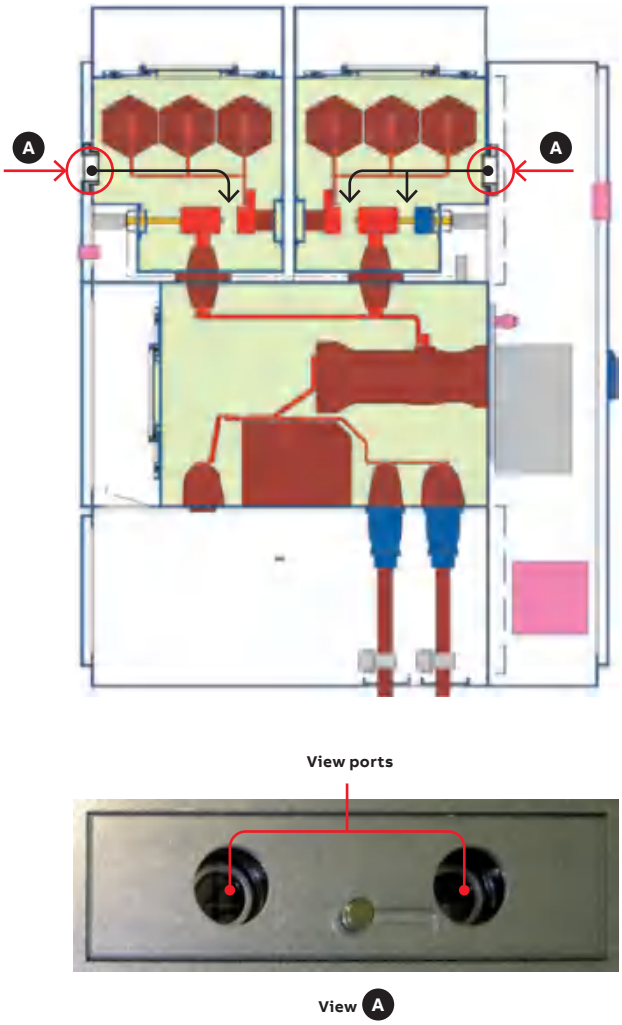

—
Fig. 7.5.1:
Parts of the busbar connection

—
Fig. 7.5.2:
Busbar connection, plugged in at one end

—
Fig. 7.5.3:
Busbar connection between the panels

7.5. Busbar

The busbars, located in the gas compartment of the panels, are connected together by plug-in busbar connectors (figs. 7.5.1 to 7.5.3). The busbar connection consists of the cast resin busbar socket 1 mounted in the busbar compartment from the inside, the silicone insulating part 2, the contact tube 3 and the spiral contacts 4 .

For a busbar current of maximum 1250 A, 2500 A and 3150 A, different cast resin busbar sockets and contact tubes are used. The design of these components is uniform within a switchgear block. For a busbar current > 2500 A, the use of heat sinks on the busbar spaces is required in accordance with chapter 8.4.2.

The electrically conductive connection from the embedded part of the cast resin busbar socket to the contact tube is established by one, two or four spiral contacts, depending on the rated busbar current. The silicone insulating part isolates the high voltage potential from earth potential. The surfaces of all electrically conductive components (embedded part, spiral contact and contact tube) are silver plated. As the contact tubes are axially movable, no further compensation for expansion in the busbars running through a switchgear system is necessary.

The circuit-breaker and busbar compartments are separate chambers in the gas system. Busbar operation therefore continues to be possible in the event of a fault in the circuit-breaker compartment of an outgoing feeder panel. The gas systems of adjacent busbar compartments are also not connected to each other (exception: double feeder panels).

The plug connector system on the one hand facilitates the delivery of panels tested at the works for leakage and dielectric strength, and on the other hand no gas work is required during installation at site (with the exception of installation of heat sinks on busbar compartments at site).

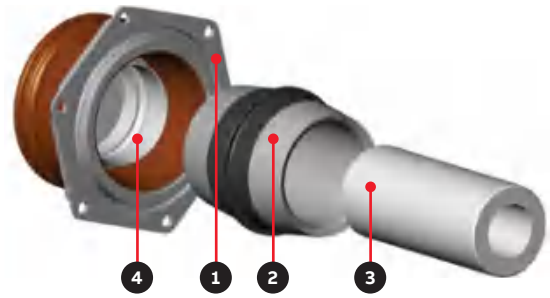

—
Fig. 7.5.1

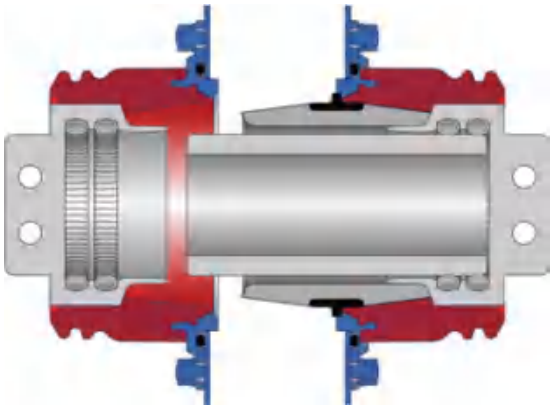

—
Fig. 7.5.2

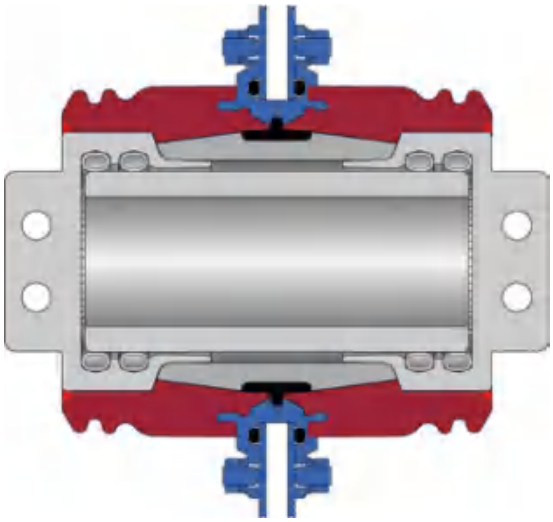

—
Fig. 7.5.3

—
Fig. 7.5.4:
Busbar enclosures with busbar end insulators and busbar sockets

—
Fig. 7.5.5:
Direct connection of fully insulated bars to the busbar

End panels
End panels are available in versions which permit extension. In these versions, the busbar sockets are dielectrically sealed off with blanking plugs. If extension is definitely not necessary, busbar end insulators (fig. 7.5.4) are used in place of the conventional busbar sockets.

Removal of intermediate panels
The busbar connection with busbar socket, insulating part and contact tube can be dismantled when the busbar is earthed, the insulating gas properly pumped out and the busbar compartment opened.

It is therefore possible to remove any panel from the middle of a switchgear installation. The busbar interrupted by removal of the panel can be temporarily bridged with the aid of a coupler box.

Direct connection of fully insulated bars to the busbar up to 3150 A
Fully insulated bars can be connected with special busbar sockets in an end panel (fig. 7.5.5).

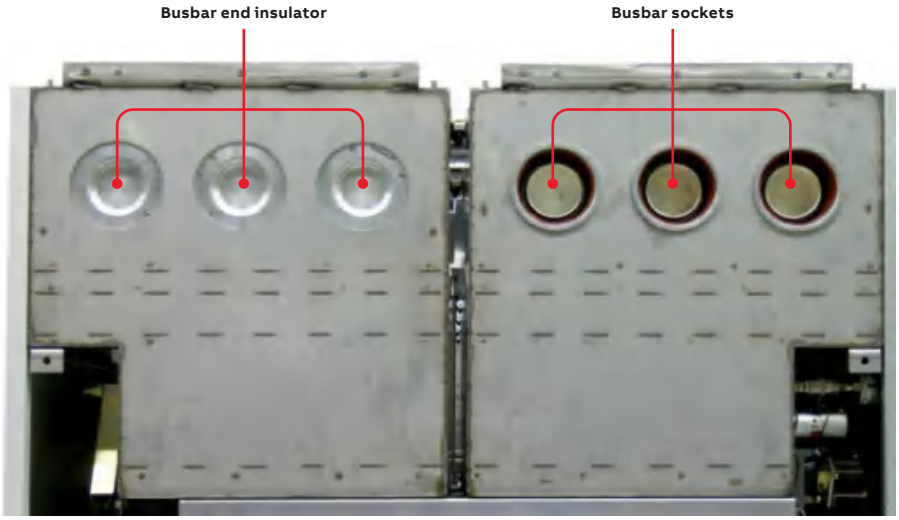

—
Fig. 7.5.4

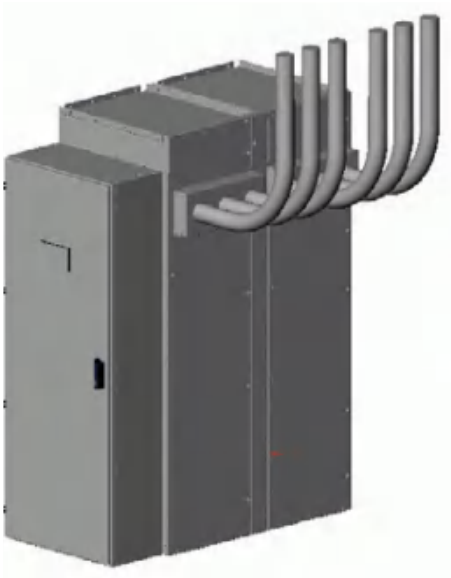

—
Fig. 7.5.5

—
Fig. 7.6.1:
View into the gas-insulated circuit-breaker compartment with inner cone sockets

—
Fig. 7.6.1.1:
View into the cable termination compartment in air with cable plugs and cables

7.6. Inner cone termination system

Inner cone sockets (fig. 7.6.1 - size 2 or 3) to EN 50180 / 50181 fitted in a gas-tight manner in the floor plate of the circuit-breaker compartment facilitate the connection of cables (fig. 7.6.1.1) with plugs according to EN 50181, fully insulated bars (7.6.2.1) or surge arresters (7.6.3.1). The inner cone termination system is above all notable for its total insulation and the associated protection against accidental contact.

7.6.1. Connection of cables

An overview of the maximum cross-sections of the cables to be connected and the cable plugs usable in various installation situations can be found in table 7.6.1.1. As the assignment of plug sizes to the actual cable used can depend on further cable data, these are to be discussed with the plug supplier. The current carrying capacity of the panels as stated is achieved when all the sockets in the panel are evenly fitted with cables.

—
Table 7.6.1.1: Cable plugs usable in various installation situations

Manufacturer	Plug size	Cable cross-section [mm²]
ABB	2	185
AB srl.		400
nkt		300
Pfisterer		400
Pfisterer	2 XL	400
Südkabel	2	300
Tyco / Raychem		400
ABB	3	630
AB srl.		630
nkt		630 (800 RE)([1])
Pfisterer	3 (3-S)	630
Pfisterer	3 XL	800
Südkabel	3	630
Tyco / Raychem		630

1. RE: round single-wire

—
Fig. 7.6.1

—
Fig. 7.6.1.1

—
Fig. 7.6.2.1: Connection of a fully insulated bar using plug size 3

—
Fig. 7.6.3.1: Connection of surge arresters. Positioning of surge arrester

7.6.2. Connection of fully insulated bars

Connection of fully insulated bars (fig. 7.6.2.1) in place of cables is possible using sockets of size 3 (up to 1250 A) or special sockets (up to 2500 A).

—
Fig. 7.6.2.1

7.6.3. Connection of surge arresters

Connection of plug-in surge arresters (see also fig. 7.9.6) of sizes 2 (12–36 kV) is possible (fig. 7.6.3.1).

ABB-Polim® surge arresters are to be used. The surge arresters consist of zinc oxide varistors, which provide optimum protection from hazardous overvoltages. The varistors are located in an aluminum casing and embedded in silicone.

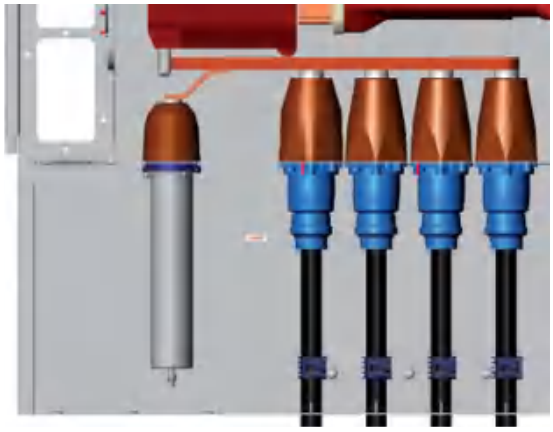

—
Fig. 7.6.3.1

—
Fig. 7.7.1:
View into the cable termination area with outer cones termination type C in air

—
Fig. 7.7.2:
View into the cable termination compartment in air with shockproof cable connectors (ABB type CSE-A) and cables

—
Fig. 7.7.3:
View into the cable termination compartment with two outer cones per phase, assembled cables at phase L3

7.7. Outer cone cable connection system
Outer cones are used in double feeder panels (width 2 x 400 mm) and in panels as shown in fig. 8.1.1.2.1 (width 600 mm). In addition, cubicles with outer cones 800 mm wide are available for up to 2000 A and 840 mm wide up to 2500 A. In the two last mentioned cubicles, two outer cones are used per phase.

Outer cone device termination components to EN 50181, fitted gas-tight in the wall between the panel module and the cable termination compartment (figs. 7.7.1 to 7.7.3), facilitate connection of cables and surge arresters. When the cover of the cable termination compartment has been removed, the cables are accessible from the rear of the system.

In the case of panels with two outer cones per phase (fig. 7.7.3), these must be fitted equal in number to cables of the same cross-section.

Shockproof cable connector systems are always to be used. A selection of various shockproof connector systems which can be installed depending on the space available can be downloaded here. When making your selection, please observe the current and short-circuit ratings of the cables and connector systems. Please consult the manufacturers' latest catalogues for the precise ordering data and information on any couplings and termination parts required.

—
Fig. 7.7.1

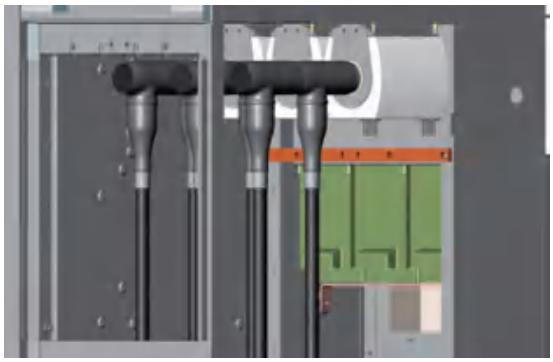

—
Fig. 7.7.2

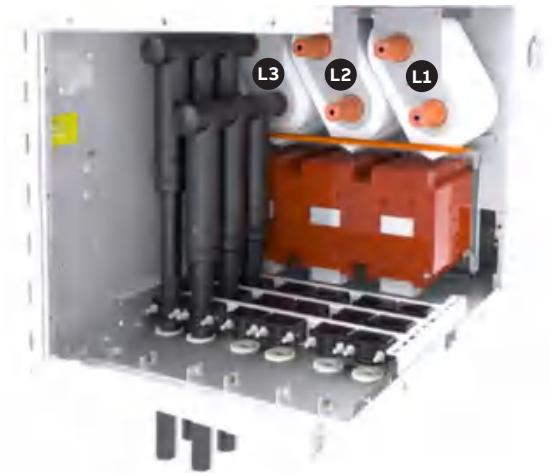

—
Fig. 7.7.3

—
Fig. 7.9.1:
View into the circuit-breaker compartment: test sockets

—
Fig. 7.9.2:
View from the rear into the cable termination compartment: Test sockets 1 – access blocked by insulating blanking plugs; main earthing bar (transport condition) 2; cable blanking plug 3 for unused cable sockets; and wiring for capacitive indicator unit 4.

—
Fig. 7.9.3:
Current test plug

—
Fig. 7.9.4:
Voltage test plug

—
Fig. 7.9.5:
Earthing set

—
Fig. 7.9.6:
Surge arrester

7.8. Main earthing bar

The main earthing bar of the switchgear system runs through the cable termination compartments of the panels. The earthing bars in the individual panels are connected together during installation at site.

The cross-section of the main earth bar is 400 mm² (ECuF30 40 mm × 10 mm) (Exception: The cross-section of main earth bars in double feeder panels is 30 mm x 8 mm). Details on earthing the switchgear can be found in section 11.9.

7.9. Test sockets

Panels with inner cone termination system
Outgoing cable panels and cable termination panels are equipped with test sockets (figs. 7.9.1 and 7.9.2). The test sockets are accessible in the cable termination compartment, and are used to accommodate voltage transformers, voltage sensors or surge arresters (fig. 7.9.6), for cable tests, for insulation testing of the panels, for testing of the protection systems by primary current injection and for maintenance earthing of the relevant outgoing feeder panel. Suitable testing and earthing sets are available for these purposes (figs. 7.9.3 to 7.9.5).

When sensors are used, no additional sockets for testing purposes are required as the sensors include a test socket.

The test sockets must be closed off with blanking plugs of high dielectric strength during normal operation of the panel.

Panels with outer cone termination system
Testing and earthing sets are connected to the fitted cable plugs via special connection adapters. The connection adapters are to be selected to match the cable plugs used.

Further information can be found in the manufacturer's documentation.

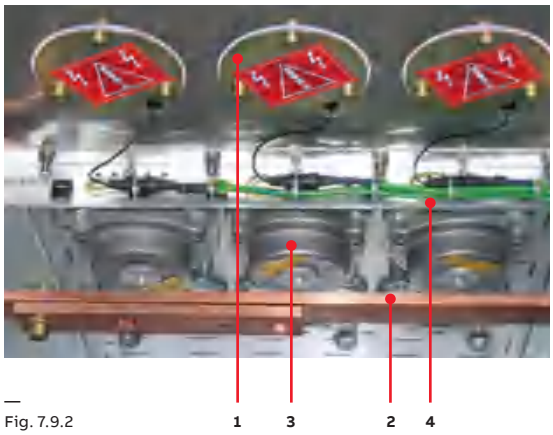

—
Fig. 7.9.2

—
Fig. 7.9.3

—
Fig. 7.9.4

—
Fig. 7.9.1

—
Fig. 7.9.5

—
Fig. 7.9.6

—
Fig. 7.10.1:
System WEGA 1.2 C

—
Fig. 7.10.2:
System WEGA 2.2 C

7.10. Capacitive voltage indicator systems
Two types of capacitive, low impedance voltage indicator systems are available for checking of the de-energized condition of a feeder. In inner cone connection systems, the coupling electrode is located in the test socket, optional second coupling electrodes for a capacitive voltage detection system in the front door the electrode is located in in cable sockets - in outer cone connection systems, the coupling electrode is located in the outer cone, a second coupling electrode is available on request. The capacitive voltage indicator system is located at the rear of the panel. A further system in the low voltage compartment door can also be used.

Both systems used are voltage detection systems (VDS) according to IEC 61243-5. The systems used permit phase comparison with the aid of an addition, compatible phase comparator.

System WEGA 1.2 C (fig. 7.10.1)
- LC-Display
- Three phase
- No additional indicator unit required
- Auxiliary voltage not required
- Maintenance-free with integrated self-test and built-in condition:
  - Phase-selective overvoltage indication
- Three phase symbolic display:
  - Voltage present / no voltage present (Threshold value for voltage presence indication: 0.1 – 0.45 × U_N)
  - Integrated maintenance test passed
  - Voltage signal too high (overvoltage indication)

System WEGA 2.2 C (fig. 7.10.2)
- As system WEGA 1.2 C, but:
  - Two integrated relay contacts (changeover contacts) for signals / interlocks
- Auxiliary voltage for relay function required (LC-Display function via measuring signal)
- LED indication:
  - green for U = 0
  - red for U ≠ 0

—
Fig. 7.10.1

—
Fig. 7.10.2

—
Fig. 7.11.3a-d:
Current and voltage detection devices

7.11. Current and voltage detection devices

The areas of application for current and voltage detection devices are:

- Protection applications
- Measurement
- Billing metering

The areas of application for current and voltage sensors are:

- Protection applications and
- Measurement.

The following current and voltage detection devices can be used (see fig. 7.11.3a-d):

- Device A: Ring core current transformer or sensors for fitting to the outer cone bushing
- Device B: Block-type transformer, block-type sensor or combined block-type transformer / sensor in the circuit-breaker compartment
- Device C: Current transformer in the circuit breaker compartment
- Device D: Ring core transformer for earth fault detection below the panel (in the cable basement)
- Device E: Optional bushing-type current transformer between the three position disconnector and circuit-breaker in a sectionaliser and riser panel
- Device F: Voltage transformer (outside the gas compartment only, plug-in type)

Conventional current and voltage transformers are certifiable.

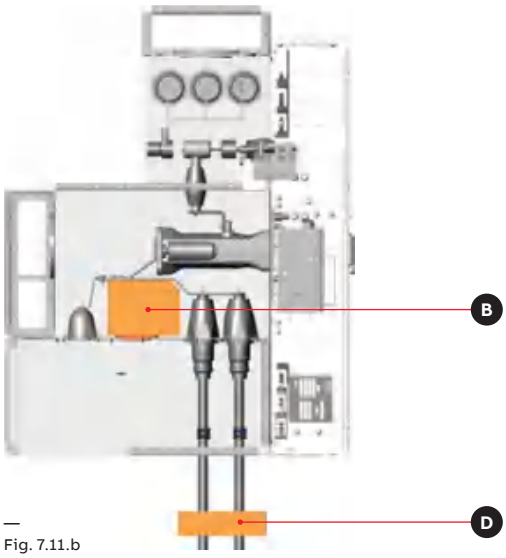

—
Fig. 7.11.b

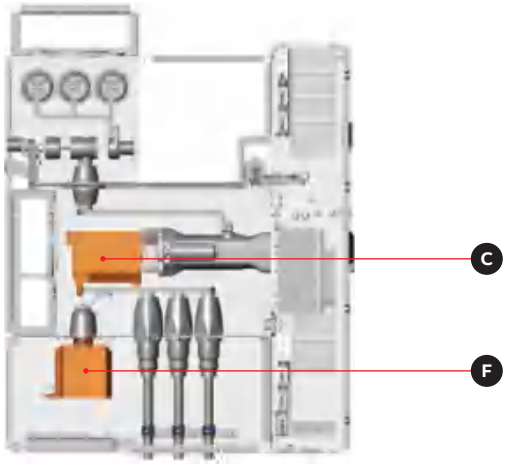

—
Fig. 7.11.c

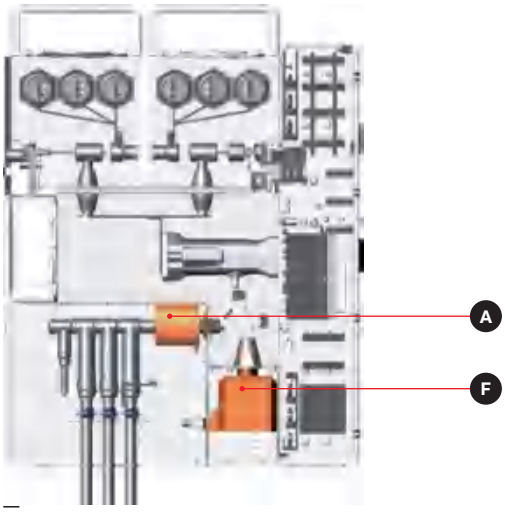

—
Fig. 7.11.3a

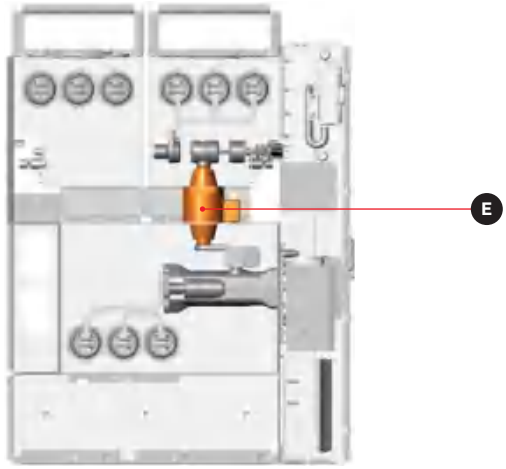

—
Fig. 7.11.3d

—
Fig. 7.11.1.1: Ring core current transformer for double feeder panels (device A, type 1)
—
Fig. 7.11.1.2: Ring core current transformer (device A, type 2)

—
Fig. 7.11.1.3: Ring core current transformer for outer cone panels up to 2500 A (type 3)

7.11.1. Ring core current transformer (device A)

Ring core current transformers (figs. 7.11.1.1 and 7.11.1.2) are used in panels with outercone connection systems. A distinction is made between three versions, depending on the rated current and the panel width.

Ring core current transformers are located outside the gas compartment and comprise the iron core and the secondary winding. The cross-section of the connecting wires is 2.5 mm2 (larger cross-sections on request). The possible technical data can be found in tables 7.11.1.1 and 7.11.1.2.

Panels with outer cones and a rated current of 2000 A (2500 A) are equipped with two cones per phase. Current transformers (type 3) according to fig. 7.11.1.3 are used.

—
Fig. 7.11.1.1

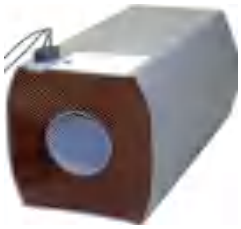

—
Fig. 7.11.1.2

—
Fig. 7.11.1.3

—
Table 7.11.1.1: Technical data of the ring core current transformers (primary data)

Type of current transformer			1	2	3
Rated voltage	U_r	kV		0.72	
Rated short duration power-frequency withstand voltage	U_d	kV		3	
Rated frequency	f_r	Hz		50 / 60	
Rated thermal short-time current	I_{therm}	kA	25	40	40
Rated impulse current	I_p	kA	62.5	100	100

—
Table 7.11.1.2: Core data

Panel width		mm	2 x 400	600	800 / 840
Rated primary current	Ir	A	...630	...1250	...2500
Rated secondary current		A		1 or 5	
Max. number of cores			2	3	3
Core data(1)					
Measuring cores	Capacity(1)	VA	2.5 to 15	...20	...30
	Class(1)			0.2 / 0.5 / 1	
Protection cores	Capacity(1)	VA	2.5 to 15	...20	...30
	Class(1)		5P to 10P	5P	5P to 10 P
	Overcurrent factor(1)		10 to 20	20	10 to 20

1. Depending on rated primary current

—
Fig. 7.11.2.1:
Block-type transformer or block-type sensor, device B

—
Fig. 7.11.2.2:
Circuit diagram of the block-type transformer / sensor (example)

7.11.2. Block-type transformers and block-type sensors (device B)

The block-type transformer (fig. 7.11.2.1 and 7.11.2.2) is used in outgoing feeder panels with inner cone cable connection system for rated currents up to 1250 A and in various bus tie panels for rated currents up to 2500 A. The block-type sensor is exclusively used in bus coupler and bus riser panels. The block-type transformer or block-type sensor consists of cast resin in which the corresponding components are embedded. It is located in the gas compartment, and is therefore protected from external influences. The terminal board is easily accessible from the outside and lead-sealable. The cross-section of the connecting wires is 2.5 mm^2 (larger cross-sections on request). At low primary currents, the block-type transformer provides the opportunity to lay the primary conductor around the iron core in several windings (wound-primary transformer). This can significantly increase the performance of the transformer. The possible technical data can be found in table 7.11.5.1.

Current sensor

The current sensor for rated currents up to 1250 A has three taps. The sensors can be adjusted to suit the working range by corresponding connection of the secondary wiring at the terminal board. The current sensor for rated currents up to 2500 A has one tap.

The measurement accuracy is better than 1%.

Voltage sensor

The voltage sensor for operating voltages up to 6 kV has a ratio of 5000:1, for up to 24 kV a ratio of 10000:1, and for 36 kV a ratio of 20000:1. The measurement accuracy is better than 1%.

Current transformer

When only current transformers are used, the device can contain up to 3 current transformer cores in a 600 mm wide panel and up to 5 current transformer cores in an 800 mm wide panel.

—
Fig. 7.11.2.1

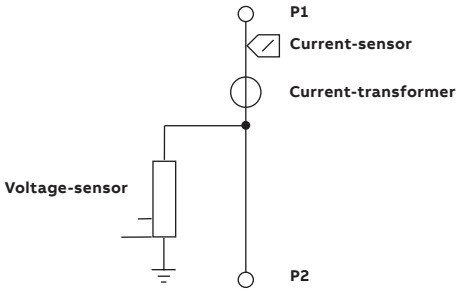

—
Fig. 7.11.2.2

—
Fig. 7.11.3.1:
Current transformer, device C

7.11.3. Current transformers (device C)

Outgoing feeder panels for currents > 1250 A are fitted with current transformers as shown in fig. 7.11.3.1. These transformers are located in the gas compartment and can accommodate up to 5 cores. The secondary wiring of the current transformer is routed out of the gas compartment into the low voltage compartment via secondary bushings below the circuit-breaker. The cross-section of the connecting wires is 2.5 mm² (larger cross-sections on request). The technical data can be found in table 7.11.5.1.

7.11.4. Earth fault transformers (device D)

Earth fault transformers are special ring core transformers. As all the power cables in a panel are routed through the transformer, the opening in the transformer has to be correspondingly large. As a result of their size, earth fault transformers are installed in the cable basement below the panel.

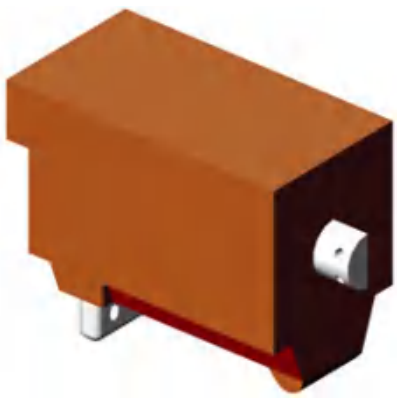

—
Fig. 7.11.3.1

—
Table 7.11.5.1: Technical data of the current transformers (primary data), devices B and C

Rated voltage	U_r	kV	...24	...36
Max. operating voltage		kV	24	40.5
Rated short duration power-frequency withstand voltage	U_d	kV	50	70 (85)
Rated lightning impulse withstand voltage	U_p	kV	125	170 (185)
Rated frequency	f_r	Hz	50 / 60	
Rated thermal short-time current	I_{therm}		100 / 250 x I_r, max. 40 kA - 3 s	
Rated impulse current	I_p	kA	100	

—
Table 7.11.5.2: Core data(1)

Panel width		mm	600	800	840
Rated primary current	I_r	A	...1250	...2000	...3150
Rated secondary current		A	1 or 5	1 or 5	
Max. number of cores			3	5	
Measuring cores	Capacity(1)	VA	2.5 or 15		
	Class(1)		0.2 / 0.5 / 1		
Protection cores	Capacity(1)	VA	2.5 to 30		
	Class(1)		5P to 10P		
	Overcurrent factor(1)		10 to 20		

1. Depending on rated primary current

7.11.5. Dimensioning of current transformers

The stipulations and recommendations of IEC 61936, section 6.2.4.1 “Current transformers”, IEC / EN 60044-1 and IEC 60044-6 are to be observed in the design of current transformers. The rated overcurrent factor and rated burden of current transformer cores are to be selected in such a way that protection devices can function correctly and measuring systems are not damaged in the event of a short-circuit.

Protection purposes

Protection cores are operated at above rated current. The function of the selected protection system is essentially determined by the connected current transformer. The requirements to be fulfilled by the current transformers for the selected protection or combination device can be found in the documentation from the protection equipment supplier.

For an accurate switchgear proposal, these current transformer data are to be provided with the product enquiry and then finally agreed by the operator and manufacturer in the order.

The direct path to the right current transformers is via the technical documentation of the selected protection device. The current transformer requirements of the relay can be found there.

Measuring purposes

In order to protect measuring and metering devices from damage in the case of a fault, they should go into saturation as early as possible. The rated burden of the current transformer should be approximately the same as the operating burden consisting of the measuring instrument and cable. Further details and designations can be found in EN 60044-1.

Recommendations

In principle, we recommend a rated secondary current of 1 A. The current transformer ratings for ABB protection devices are known. The transformer data can be selected to suit the protection application and the network parameters. If, however, third party devices are to be connected, we recommend a review by our engineers at an early stage. Taking account of the burdens and overload capacities, our experts can examine the entire current transformer requirements of the third party protection devices on request.

Further information for different protection systems

If the current transformers to be used in the network concerned (e.g. on the opposite side of the network) have already been specified, early coordination of the switchgear configuration is advisable. This requires, but is not limited to, the provision of data on the ratio, rated capacity, accuracy class, and the resistance of the secondary winding and secondary wiring. Further configurations for the particular application can then be requested.

—
Fig. 7.11.6.1:
Current sensor,
ABB Type KECA 80 C85

7.11.6. Current sensors

As an alternative to conventional current transformers, current sensors to IEC 60044-8 (fig. 7.11.6.1) can be used for outgoing feeder metering or busbar current measurement. The current sensors used are based on the Rogowski coil principle and have a distinctive linear characteristic throughout the service current range of the switchgear.

Current sensors (type designation KECA 80 C85) are located on the outer cones of outgoing feeder panels or on the busbars outside the gas compartment.

In panels for currents > 1250 A one current sensor is fitted on each of the two cones per phase. The secondary wiring of the two sensors for each phase are connected in series.

The secondary connection is by a screened cable with an RJ45 plug. The technical data of the current sensors can be found in table 7.11.6.1 below.

—
Fig. 7.11.6.1

—
Table 7.11.6.1: Technical data of the current sensors

Rated voltage	U_r	kV	0.72
Rated short duration power-frequency withstand voltage	U_d	kV	3
Rated frequency	f_r	Hz	50 / 60
Rated thermal short-time current	I_{therm}		40 kA - 3 s
Rated impulse current	I_p	kA	104
Rated primary current		A	2500 A
Rated ratio			80 A / 150 mV (50 Hz) 80 A / 180 mV (60 Hz)
Class			0.5 / 5P630

—
Fig. 7.11.7.1:
Plug-in type voltage transformer, device F

7.11.7. Voltage transformers (device F)

The voltage transformers are always located outside the gas compartments. They are of the plug-in type (plug size 2 to EN 50181 and DIN 47637). In feeder panels and in integrated meterings without isolating systems the voltage transformers can be dismantled for test purposes.

Voltage transformers in metering panels can be isolated. Integrated meterings can be equipped with an isolating device for the voltage transformers. Isolating devices include an earthing function for the isolated voltage transformers. In integrated meterings isolator devices for voltage transformers can be equipped with auxiliary switches.

Voltage transformers in outgoing feeder panels of 600 mm width are suitable for rated voltages up to 33 kV (50 Hz).

The technical data can be found in tables 7.11.7.1 and 7.11.7.2.

—
Fig. 7.11.7.1

—
Table 7.11.7.1: Technical data of voltage transformers

	Max. capacity	Class	Rated secondary voltage of the metering winding	Rated secondary voltage of the earth fault winding	Rated thermal current limit of the metering winding with rated voltage factor 1.2 / continuous	Rated thermal long duration current of the earth fault winding with rated voltage factor 1.9 / 8 h
	[VA]		[V]	[V]	[A]	[A]
Voltage transformers for 1250 A panel, 3 x cable sockets per phase	15	0.2	100 / √3 110 / √3	100 / 3 110 / 3	4	4
	45	0.5				
	100	1				
All other voltage transformers	30	0.2	100 / √3 110 / √3	100 / 3 110 / 3	6	6
	75	0.5				
	150	1				

—
Table 7.11.7.2: Rated power frequency withstand voltage of voltage transformers

Rated voltage	Rated power frequency withstand voltage (1 min)
[kV]	[kV]
< 6	5 x U_r
6 to 12	28
> 12 to 17.5	38
> 17.5 to 24	50
> 24 to 36	70
> 36 to 40.5	85

—
Fig. 7.11.8.1:
Voltage sensor

7.11.8. Voltage sensors

ZX2 panels can be fitted with voltage sensors to IEC 60044-7 (fig. 7.11.8.1) instead of conventional voltage transformers. The plug-in voltage sensors are always located outside the gas compartments and are installed in the cable termination compartment or on the busbar. The sensors are based on an ohmic voltage divider and therefore have a linear transmission characteristic throughout the measuring range. The technical data of the voltage sensors can be found in table 7.11.8.1 below.

—
Fig. 7.11.8.1

—
Table 7.11.8.1: Technical data of the voltage sensors

Rated voltage	U_r	kV	...24	...36
Rated short duration power-frequency withstand voltage	U_d	kV	70	
Rated frequency	f_r	Hz	50 / 60	
Rated ratio			10000:1	20000:1
Class			1 / 3P	

7.12. Protection and control units

ABB provides the right protection and automation solution for every application.

Table 7.12.1 below provides an overview of the most important protection devices with notes on their range of applications.

Further information can be obtained in the Internet or from the responsible ABB contact for you.

—

Table 7.12.1: Application of protection and control units

Unit designation	REF620	RET620	REM620	REX640	REF615	RET615	REM615	RED615
Application								
Main protection	•	•	•	•				
Backup protection					•	•	•	•
Feeder protection	•			•	•			
Transformer protection		•		∘		•		
Motor protection			•	∘			•	
Cable differential protection				∘				•
Busbar differential protection				∘				
Communication protocols								
DNP 3.0	•	•	•	•	•	•	•	•
IEC 60870-5-103	•	•	•	•	•	•	•	•
IEC 60870-5-104				•				
IEC 61850 Ed.1	•	•	•	•	•	•	•	•
IEC 61850 Ed.2 (inc. SMV)	•	•	•	•	•	•	•	•
Modbus	•	•	•	•	•	•	•	•
Analog input (sensor channels)	•			•	•	•	•	

• Function supported
∘ Function available as option

—
Fig. 7.13.1:
Composition of AirPlus for MV GIS

—
Fig. 7.13.2:
Comparison of the GWP of SF_6 and AirPlus

7.13. Insulating gas

Gas-insulated switchgear is particularly successful wherever constricted space necessitates a compact design. It requires only a fraction of the space occupied by conventional switchgear systems. Thanks to the gas insulation, new systems can for example be installed at load centers in densely populated areas where the high cost of land prohibits other solutions.

Freedom from maintenance is achieved in gas-insulated switchgear systems by maintaining constant conditions in the high voltage compartments. The adverse influences of dust, vermin, moisture, oxidation and polluted air in the high voltage compartments are precluded by the protective gas inside the gas-tight encapsulation.

The insulating gas in switchgear of type ZX2 can be sulphur hexafluoride (SF_6)([1]) or AirPlus .

ABB is the first manufacturer worldwide to supply gas-insulated medium voltage switchgear with the new, ecologically efficient insulating gas AirPlus.

AirPlus for MV GIS

AirPlus consists of over 80% dry air and 3M™ Novec™ 5110, an organic molecule containing fluorine.

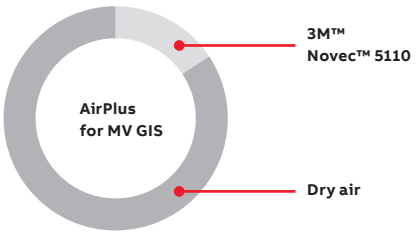

—
Fig. 7.13.1

Reduction of the global warming potential by almost 100%.

With AirPlus, the global warming potential of the insulating gas is reduced to less than 1, a reduction of over 99.99% compared with SF_6. Regulations applicable to SF_6 on account of its effects on the climate do not apply to AirPlus with its GWP of < 1.

Panels insulated with AirPlus have the same compact dimensions as SF_6 - insulated panels.

The user can choose between three options:

- ZX2 panels with SF_6 insulating gas
- ZX2 panels with SF_6 insulating gas, ready for replacement by AirPlus (AirPlus Ready)
- ZX2 panels filled at the works with AirPlus

As a result of the focus on environmental topics, AirPlus is being launched in Europe with products that comply with IEC standards. Its availability is to be continuously extended to other countries in the coming years. Please do not hesitate to contact ABB if you wish to use ZX2 switchgear with AirPlus insulation in countries outside Europe.

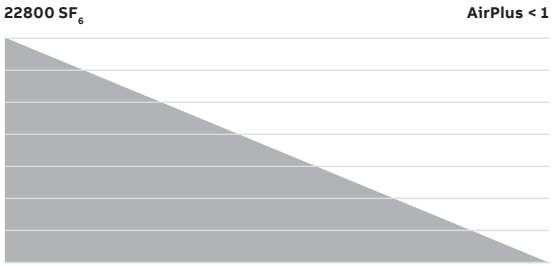

—
Fig. 7.13.2

1. This product may contain sulphur hexafluoride (SF_6). SF_6 is a fluorinated greenhouse gas with a GWP of 22800. The maximum quantity per panel is 18 kg, divided into maximally four gas compartments. That corresponds to a CO_2 equivalent of 410 t. Each gas compartment has a gas leakage monitor, and therefore regular leakage testing(to Fluorinated Gas Regulation 517/2014) is not required.

—
Fig. 7.14.1:
Gas filling connector

—
Fig. 7.14.2:
Density sensor

7.14. Gas system in the panels

The gas compartments are designed as hermetically sealed pressure systems. As they are filled with insu lating gas, constant ambient conditions are permanently ensured for the entire high voltage area of the panel. It is not necessary to top up the insulating gas during the expected service life of the system. Under normal operating conditions, no checks on the insulating gas are necessary. The insulating gas is maintenance-free.

The circuit-breaker compartment and the busbar compartment in each panel are separate gas compartments with their own gas filling connectors (fig. 7.14.1). The gas compartments of the individual panels in a row are not connected together (exception: double feeder panels). Each panel has gas filling connectors (fig 7.14.1 - see also section 6), through which the gas compartments can be filled with gas, for instance in the case of repairs.

The service pressure in the individual gas compartments is monitored by separate density sensors (temperature-compensated pressure sensors, fig 7.14.2). A shortfall below the insulation warning level (120 kPa) in a gas compartment is indicated on the protection and control unit or by a signal lamp.

SF_6 - insulation

Temporary operation of the panel at atmospheric pressure (> 100 kPa) is in principle possible if the SF_6 content of the insulating gas is at least 95% (exceptions: 120 kPa required for rated voltage > 36 kV, and 110 kPa for operation of a double feeder panel with rated voltage > 17.5kV).

AirPlus-insulation

Systems with $U_r \leq 24$ can be operated at a gas pressure below the warning level (< 120 kPa) and above atmospheric pressure (> 100 kPa) (this is not however applicable to double feeder panels).

Additional, optional protection function

As an option, the thermal effects of an internal arc fault can be limited by an Ith protection function. For this purpose, the signal from an additional switching contact for all the gas density sensors (threshold 190 kPa) is logically linked to an overcurrent excitation system and used to trip defined circuit-breakers. The logic operation is performed by the combined protection and control unit RE_, and reduces the breaking time to only approximately 100 ms.

Leakage testing of the gas compartments during manufacturing process

The leakage rate of the gas compartments is determined by integral leakage testing:
Inside a pressure test cabin, following evacuation of the gas compartments, the panel is filled with helium. The leakage rate of the gas compartments is determined by measurement of the proportion of helium in the test cabin. The helium is then recovered as the gas compartments in the panel are evacuated again. Thereafter, the gas compartments are filled with insulating gas at the rated filling pressure. A successful leakage test is therefore the necessary condition for filling of the systems with insulating gas.

—
Fig. 7.14.1

—
Fig. 7.14.2

—
Fig. 7.15.1:
Schematic diagram of the function of the gas density sensor

—
Fig. 7.15.2:
Version 1 of the gas density sensor

—
Fig. 7.15.3:
Version 2 of the gas density sensor

7.15. Gas density sensor

Fig. 7.15.1 shows the function of the gas density sensor. Between the measuring chamber and a reference chamber there is a moving mounting plate which operates electrical contacts.

Temperature compensation

The pressure in the monitored gas compartment rises with increasing temperature. As, however, the temperature in the reference chamber and thus the pressure of the reference volume increases to the same extent, this does not lead to any movement of the mounting plate.

Self-supervision

A drop in pressure of the reference volume results in a movement of the mounting plate (to the right in fig. 7.15.1). The self-supervision contact is operated. As the system is designed as a closed circuit, both wire breakages and defective plug and terminal connections are signaled as faults.

Gas losses

A loss of gas in the monitored gas compartment results in a drop in pressure in the measuring volume and thus a movement of the mounting plate (to the left in fig. 7.15.1). The contact for the pressure loss signal is operated.

Two versions of gas density sensors

Two versions of the density sensors (figs. 7.15.2 and 7.15.3) are used.

1. A common indication for gas loss, wire breakage, defective plug connection and defective pressure sensor for the reference volume.

2. Separate indications for
a) Gas loss, wire breakage and defective plug connection, and
b) Defective pressure sensor for the reference volume, wire breakage and defective plug connection.

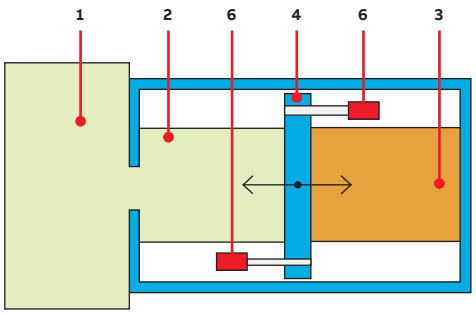

—
Fig. 7.15.1

1. Monitored gas compartment
2. Measuring volume
3. Enclosed volume for temperature compensation (reference volume)
4. Mounting plate moved by interaction of forces (pressure of measuring volume against pressure of reference volume)
5. Contact for self-supervision (p > 150 kPa)
6. Contact for gas loss (p < 120 kPa)

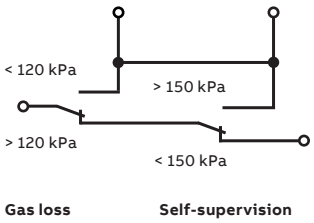

—
Fig. 7.15.2

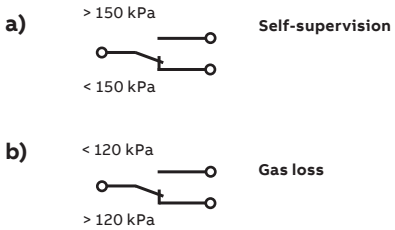

—
Fig. 7.15.3

—
Fig. 7.16.1:
Pressure relief into the switchgear room

—
Fig. 7.16.2:
Pressure relief into the switchgear room upwards

—
Fig. 7.16.3:
Pressure relief to the outside

7.16. Pressure relief systems

In the unlikely event of an internal arc fault in a gas compartment, the relevant pressure relief disk opens. There is an opportunity to discharge pressure via pressure relief ducts and an absorber into the switchgear room or to the outside.

Pressure relief into the switchgear room along the switchgear (fig. 7.16.1)

Discharge of pressure from the circuit-breaker compartments and cable termination compartments is effected via the rear pressure relief duct, then via vertical pressure relief ducts at both sides of the switchgear designed as a broad end cover to the horizontal pressure relief duct. Discharge of pressure from the busbar compartments is directed into the horizontal pressure relief duct. The pressure surge is cooled in the (plasma) absorbers located above the horizontal duct and released into the switchgear room.

Pressure relief into the switchgear room upward (fig. 7.16.2)

Discharge of the pressure takes place in principle in the same way as pressure relief into the switchgear room along the switchgear with the difference that the discharge is not horizontal but upwards towards the switchgear room ceiling.

The following restrictions apply:

- For switchgear with a rated short-time withstand current of 31.5 kA
- Applicable for SF_6 insulated switchgear
- The length of the switchgear must be at least 1600 mm (without lateral, vertical pressure relief ducts)
- The minimum switchgear room height is 3500 mm
- Integrated measurements can be placed from the third panel

Pressure relief to the outside (fig. 7.16.3)

Discharge of the pressure takes place in principle in the same way as pressure relief into the switchgear room along the switchgear. The pressure is discharged into the open air by means of a customised pressure relief duct extension leading to an opening in the outside wall of the switchgear room. The building wall through which the pressure relief duct is led to the outside must not contain any combustible materials. The area outside below the pressure relief discharge opening is to be fenced off and marked with warning signs. There must not be any accessible areas such as stairs or walkways above the pressure relief opening. Storage of combustible materials in the areas mentioned is prohibited. The dimensions of the hazardous area can be found in the section entitled “Hazardous area

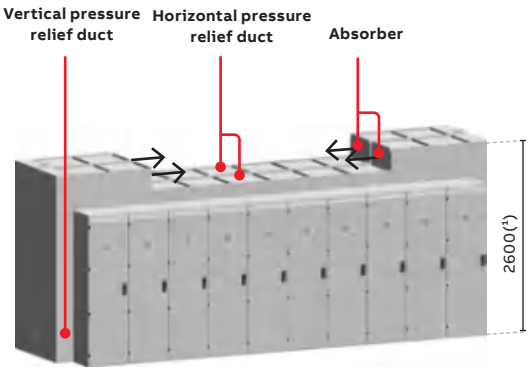

—
Fig. 7.16.1

—
Fig. 7.16.2

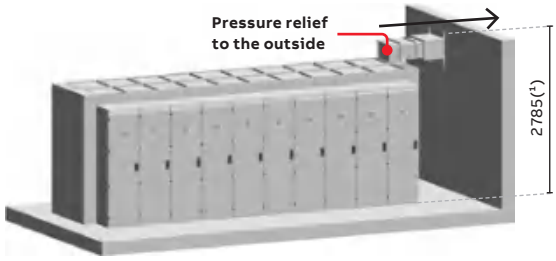

—
Fig. 7.16.3

1. Without taking account of voltage transformers or heat sinks on busbar compartments

for pressure relief to the outside".

Further planning information
For SF_6 applications, it is recommended to use vertical pressure relief ducts on both sides of the system, as this will allow extension or repair during partial operation.

For AirPlus applications, a vertical pressure relief duct is always required on both sides of the switchgear.Absorber or discharge to the outside should be placed on the non-expandable side of the system. If a double-sided extension is to be possible with partial operation, we recommend to provide absorber or discharge to the outside on both sides of the system.

7.17. Surface treatment
The gas-tight enclosures of the panels consist of stainless steel sheets. The cable termination compartments, the low voltage compartments, the covered pressure relief ducts at the rear and the pressure relief ducts on the busbar compartments are manufactured from galvanized sheet steel, and therefore surface treatment is not required in these cases.

The covers at the rear of the panels and the end covers at the sides of the switchgear system can be supplied galvanized or optionally coated with a powder stove enamel in RAL 7035 (light gray). Other colours for the painted components are available on request.

8. Range of panels

—
Fig. 8.1.1.1.1:
Feeder panel 1250 A with block-type transformer and two cable per phase

—
Fig. 8.1.1.1.2:
Feeder panel 2000 A with current and voltage transformer and three cables per phase

—
Fig. 8.1.1.1.3:
Feeder panel 2500 A (width 840 mm) with current and voltage transformer and four cables per phase

—
Fig. 8.1.1.1.4:
Feeder panel 3150 A (width 840 mm) with current and voltage transformer and four cables per phase

The following panel variants are available in single and double busbar versions:

- Incoming and outgoing feeder panels
- Cable termination panels
- Sectionaliser panels
- Metering panels
- Double feeder panels
- Customised panel versions

Please note: The stated panel depths refer to a low voltage compartment depth of 500 mm.

8.1. Panels in single busbar design

8.1.1. Feeder panels

8.1.1.1. Incoming and outgoing feeder panels with inner cone cable plug system

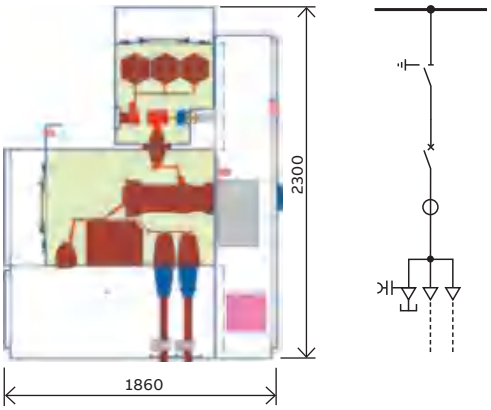

—
Fig. 8.1.1.1.1

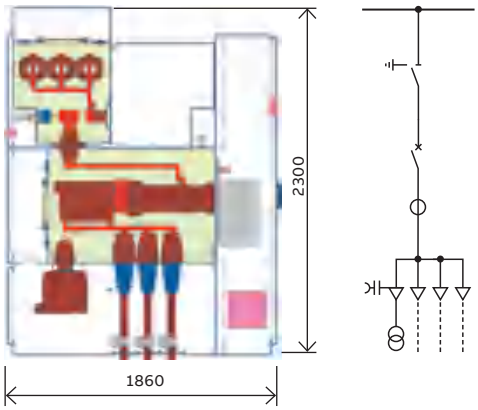

—
Fig. 8.1.1.1.2

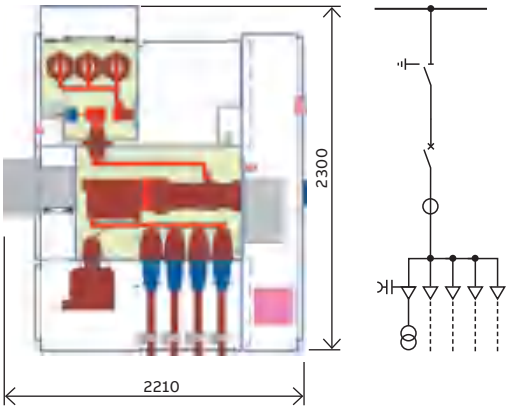

—
Fig. 8.1.1.1.3

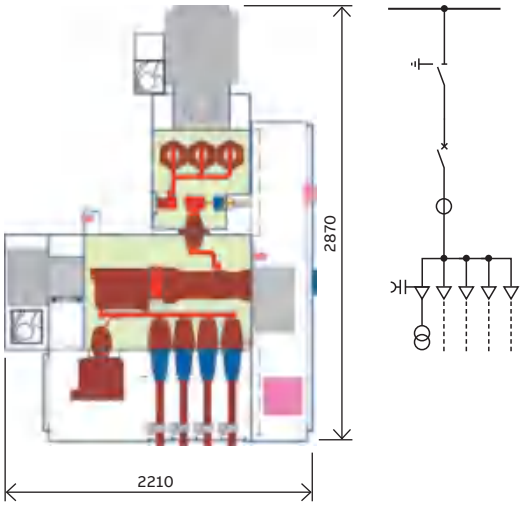

—
Fig. 8.1.1.1.4

—
Fig. 8.1.1.1.5:
Schematic of variants of incoming and outgoing feeder panels with inner cone termination system

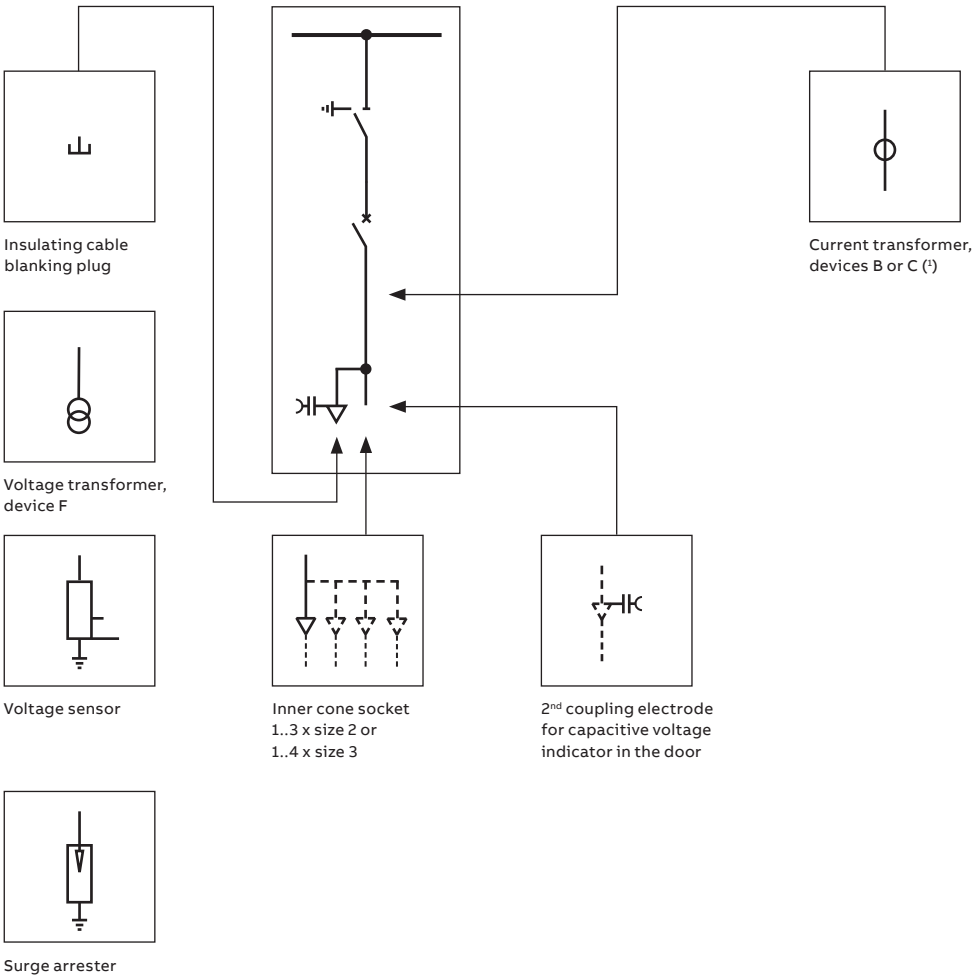

—
Table 8.1.1.1.1: Overview of variants of incoming and outgoing feeder panels with inner cone termination system

Insulating gas		SF_6	AirPlus
Panel width 600 mm:	U_r:	...36 kV	...36 kV
	I_r:	...800 A (1 x size 2)	...800 A (1 x size 2)
	I_r:	...1250 A (2...3 x size 2 und 1...2 x size 3)(1)	...1250 A (2...3 x size 2 und 1...2 x size 3)(1)
	I_p:	...40 kA(2)	...31.5 kA(2)
Panel width 800 mm:	U_r:	...36 kV	...36 kV
	I_r:	...1250 A (1...3 x size 3)(1)	...1250 A (1...3 x size 3)(1)
	I_r:	...2000 A (3...4 x size 3) (1)	...2000 A (3...4 x size 3)(1)
	I_p:	...40 kA	...31.5 kA
Panel width 840 mm:	U_r:	...36 kV	
	I_r:	...2500 A, ...3150 A (4 x size 3)	on request
	I_p:	...40 kA	

1. Device B: 1 and 2 cable sockets per phase , device C: 3 and 4 cable sockets per phase
2. When using socket size 2: At least two sockets are required

—
Fig. 8.1.1.2.1:
Feeder panel with outer cone and current and voltage sensors, 1250 A

—
Fig. 8.1.1.2.2:
Double feeder panel with current transformers
24 kV, 630 A

—
Fig. 8.1.1.2.3:
Feeder panel with outer cones, Example with current and voltage transformers, 2000 A

—
Fig. 8.1.1.2.4:
Feeder panel with outer cones and current and voltage sensors, 1250 A

—
Fig. 8.1.1.2.5:
Double feeder panel woth current sensors
24 kV, 630 A

8.1.1.2. Incoming and outgoing feeder panels with outer cone cable connection system

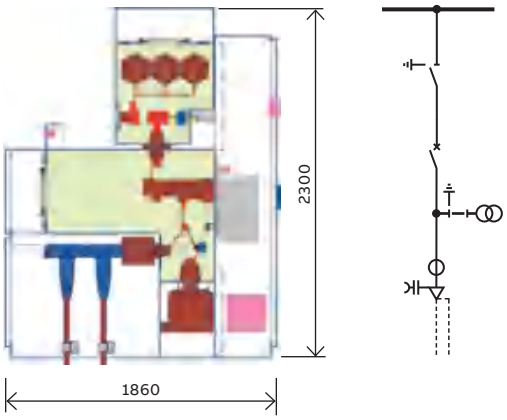

—
Fig. 8.1.1.2.1

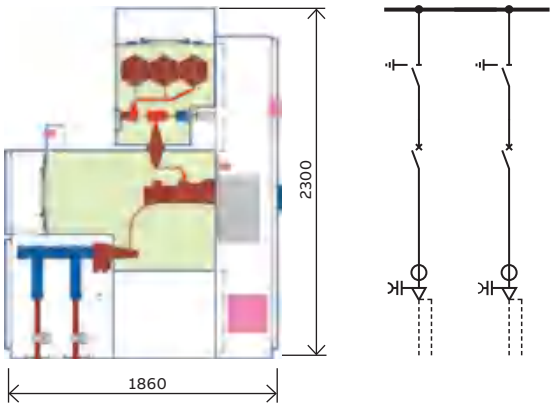

—
Fig. 8.1.1.2.2

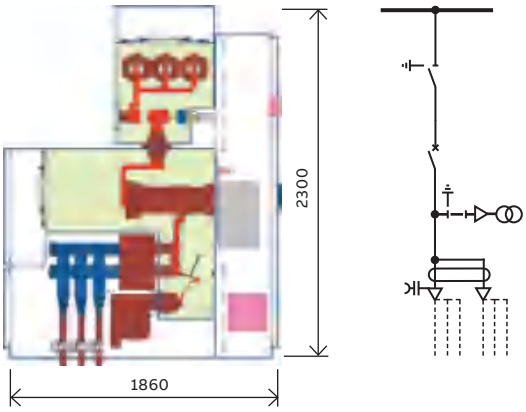

—
Fig. 8.1.1.2.3

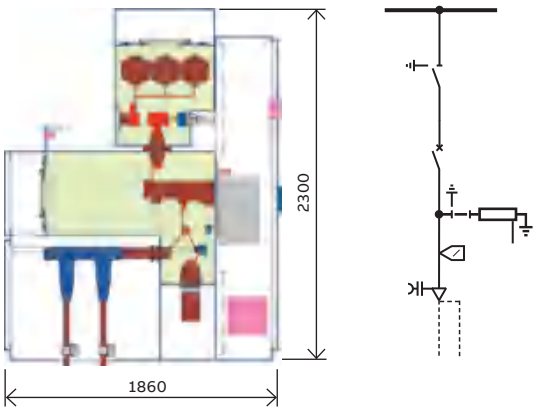

—
Fig. 8.1.1.2.4

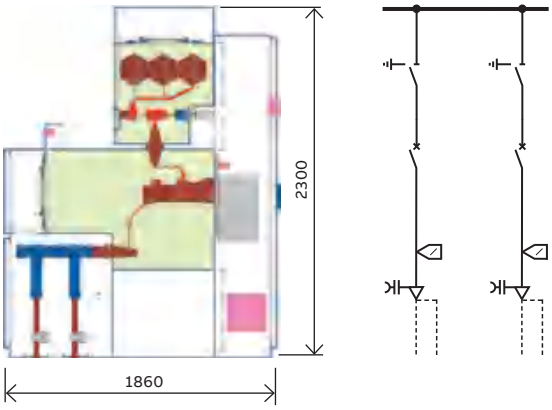

—
Fig. 8.1.1.2.5

—
Fig. 8.1.1.1.6:
Schematic of variants of incoming and outgoing feeder panels with outer cone termination system up to 1250 A

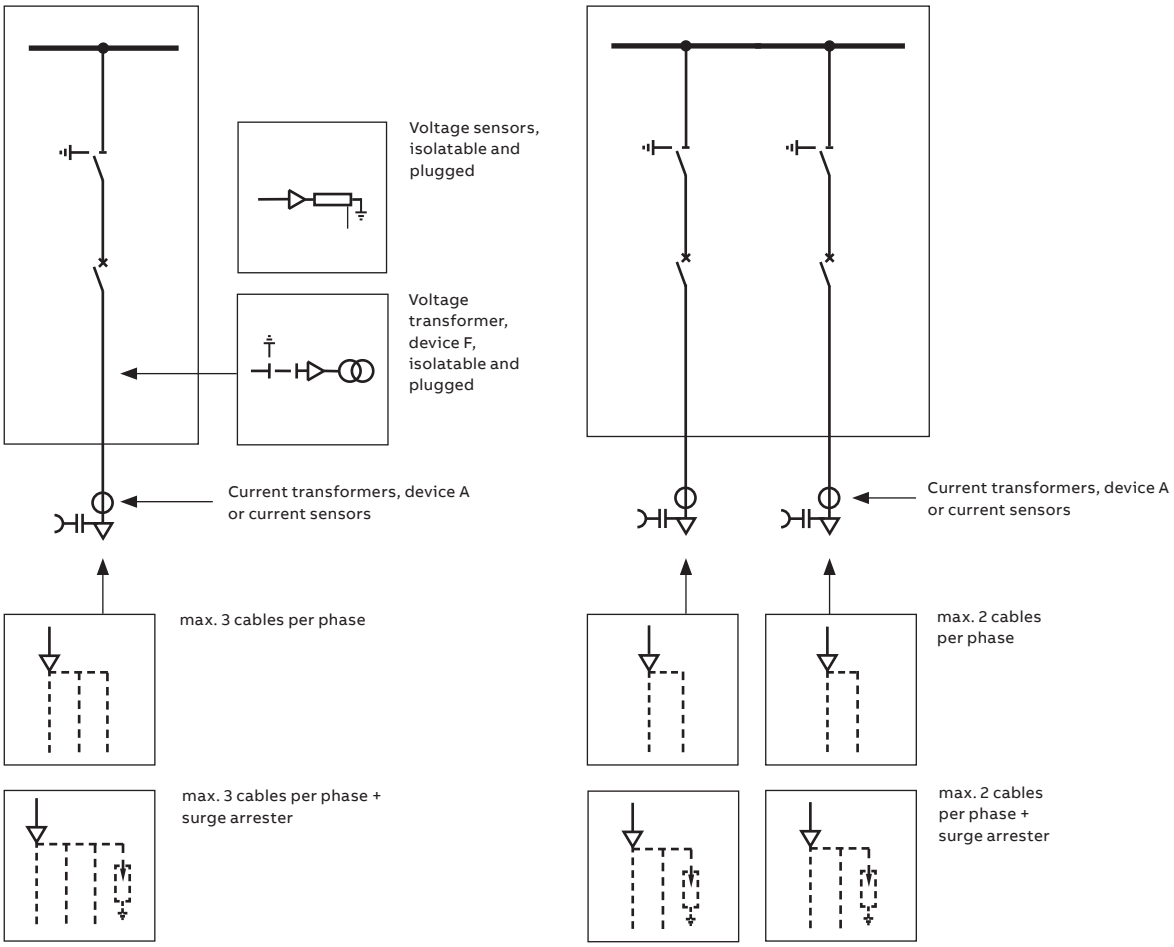

—
Table 8.1.1.2.1: Overview of variants of feeder panels with outer cone connection system up to 1250 A

Insulating gas		SF_6	AirPlus
Panel width 600 mm:	U_r:	...36 kV	...36 kV
	I_r:	...1250 A	...1250 A
	I_p:	...40 kA	...31.5 kA
Double feeder panel Panel width 2 x 400 mm:	U_r:	...24 kV	...24 kV
	I_r:	...630 A	...630 A
	I_p:	...25 kA	...25 kA

—
Fig. 8.1.1.1.7:
Schematic of variants of incoming and outgoing feeder panels with outer cone termination system up to 2500 A

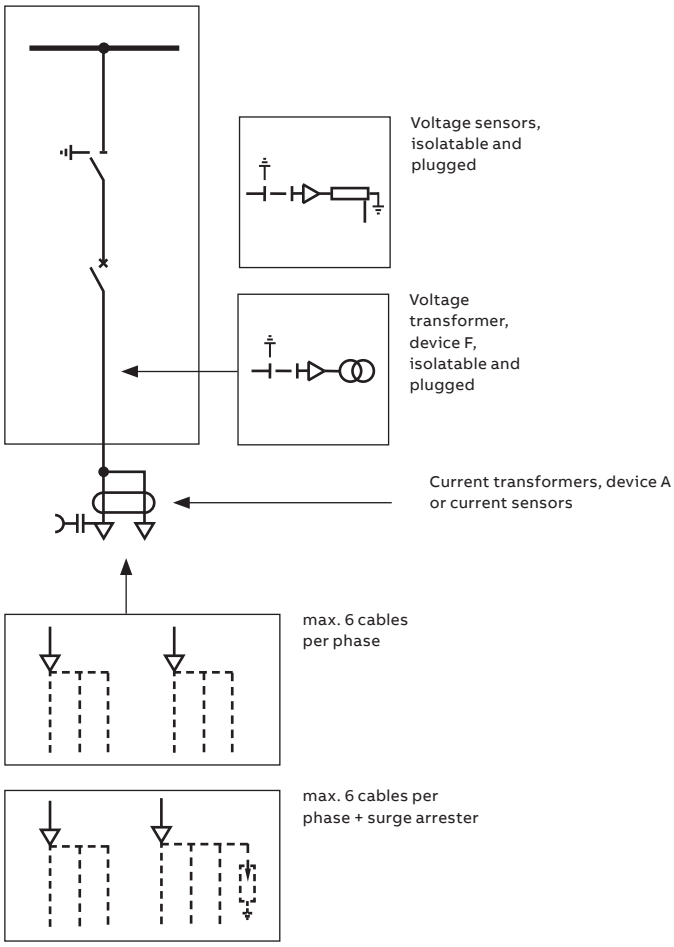

—
Table 8.1.1.2.2: Overview of variants of feeder panels with outer cone connection system up to 2500 A

Insulating gas		SF_6	AirPlus
Panel width 800 mm:	U_r:	...36 kV	on request
	I_r:	...2000 A	
	I_p:	...40 kA	
Panel width 840 mm:	U_r:	...36 kV	on request
	I_r:	...2500 A	
	I_p:	...40 kA	

—
Fig. 8.1.1.2.3:
Double feeder panel

Top: Section view of version with busbar at the front, two cables per phase and surge arresters

Bottom: Single line diagram with gas and cable compartment schematic

Deviations for double feeder panels

The structure of the double feeder panel deviates from that of a conventional outgoing feeder panel as described below.

- The double feeder panel facilitates even more compact station planning for systems up to 24 kV.
- The width (= transport width) of a double feeder panel is 800 mm, with two outgoing feeders of 400 mm width grouped together in the double feeder panel .
- The busbar compartment for the two feeders in a double feeder panel is a continuous gas compartment extending over the panel width of 800 mm.
- The two circuit-breaker compartments in a double feeder panel are two independent units.
- Only the outer cone plug system (one or two cables per phase) to EN 50181, type C is used.
- Only ring core current transformers or ring core sensors are used.
- Two separate low voltage compartment doors (width 400 mm) are fitted.
- Technical data which deviate from the conventional panel (compare section 4):

U_r:	...24 kV
I_k:	...25 kA
I_r (feeder):	...630 A
I_r (busbar):	...3150 A

Internal arc classification according to IEC 62271-200

Classification IAC	AFLR
Internal arc	25 kA 1 s

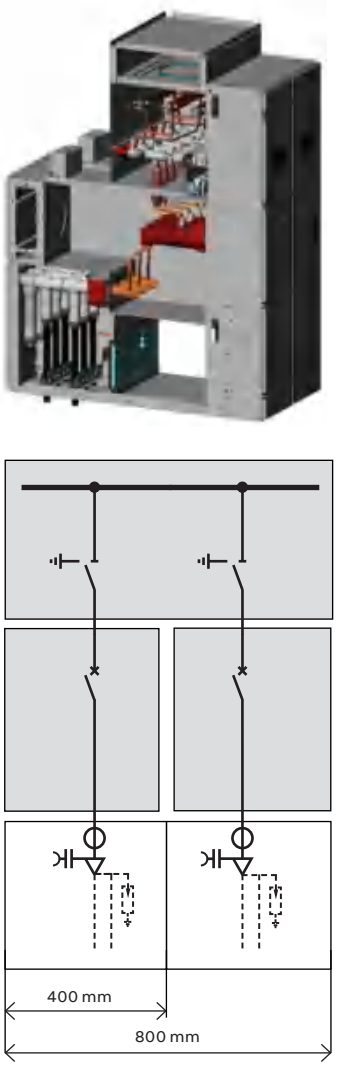

—
Fig. 8.1.1.2.3

8.1.1.3. Panels with operating currents over 3150 A and up to 5000 A

Incoming feeder panels
(I_r up to 5000 A, fig. 8.1.1.3.1)
In this version, the busbars of two double busbar panels of 840 mm width each are connected in parallel by the disconnectors. These two panels thus perform the function of a single busbar panel for currents up to 5000 A.

The operating current coming from the cable sockets is fed via the two circuit-breakers and the four disconnectors in the two panels to the two parallel busbars.

Display of the switch positions and control of the switching devices are effected at the master control unit (only one of the two human-machine interfaces is used for display and control). The function of the two panels as a single busbar panel is shown on the display of this human-machine interface.

On earthing, the two earthing switches are operated while the pure disconnectors remain in the OFF position.

Outgoing feeder panels within a block with parallel busbars (I_r up to 2500 A, fig. 8.1.1.3.2)
The feeder current coming from the two parallel busbars is fed via the two disconnectors and the circuit-breaker to the cable sockets. This double busbar panel thus performs the function of a single busbar panel with one busbar for currents up to 5000 A.

Display of the switch positions and control of the switching devices are effected by the human-machine interface of the protection and control unit. The function of the panel as a single busbar panel is shown on the display of this human-machine interface.

On earthing, the earthing switch is operated while the pure disconnector remains in the OFF position.

The variants for this panel version can be found in section 8.2.1.

—
Fig. 8.1.1.3.1:
Example of an incoming feeder in single busbar design with I_r = 5000 A, consisting of two panels with a width of 840 mm each.

—
Fig. 8.1.1.3.2:
Example of an outgoing feeder for parallel busbars (Busbar current I_r = 4000 A

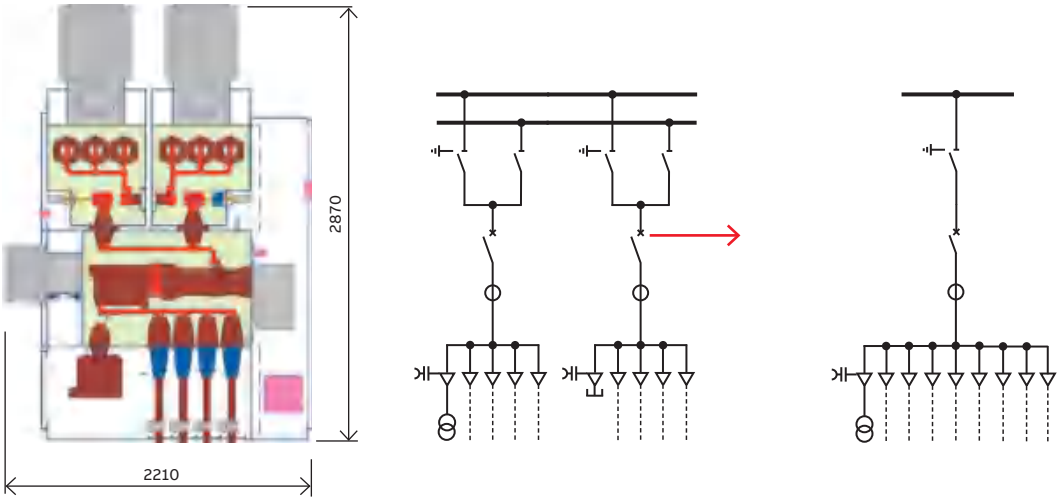

—
Fig. 8.1.1.3.1

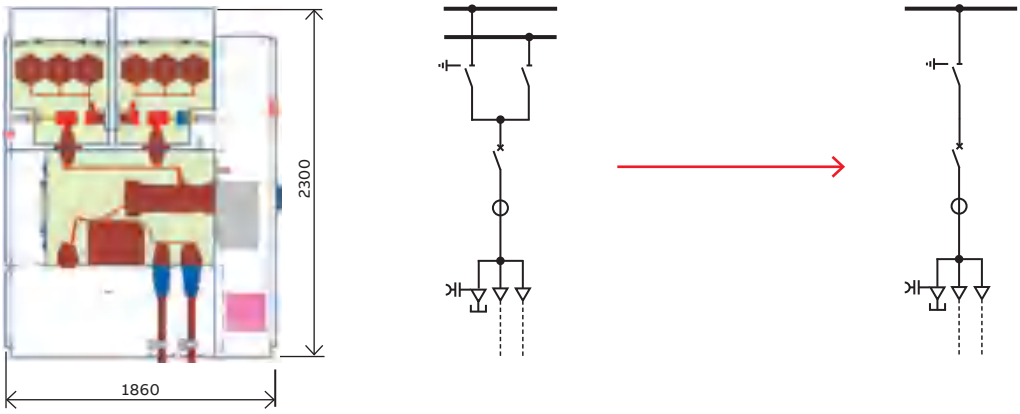

—
Fig. 8.1.1.3.2

—
Fig. 8.1.1.4.1:
Cable termination panel 2000 A

—
Fig. 8.1.1.4.2:
Cable termination panel 1250 A with voltage transformer at the cable

—
Fig. 8.1.1.4.3:
Schematic of variants of cable termination panels with inner cone connection system

8.1.1.4. Cable termination panels

8.1.1.4.1. Cable termination panels with inner cone cable plug system

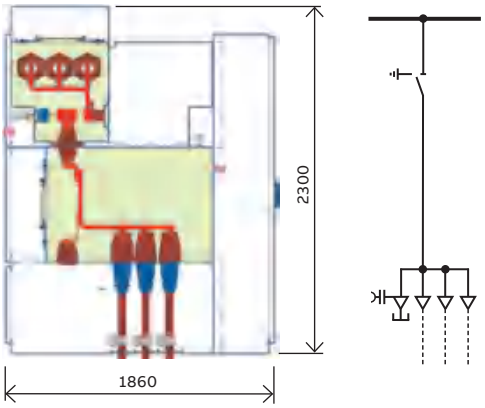

—
Fig. 8.1.1.4.1

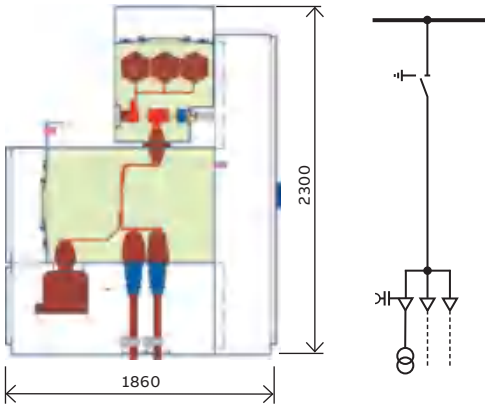

—
Fig. 8.1.1.4.2

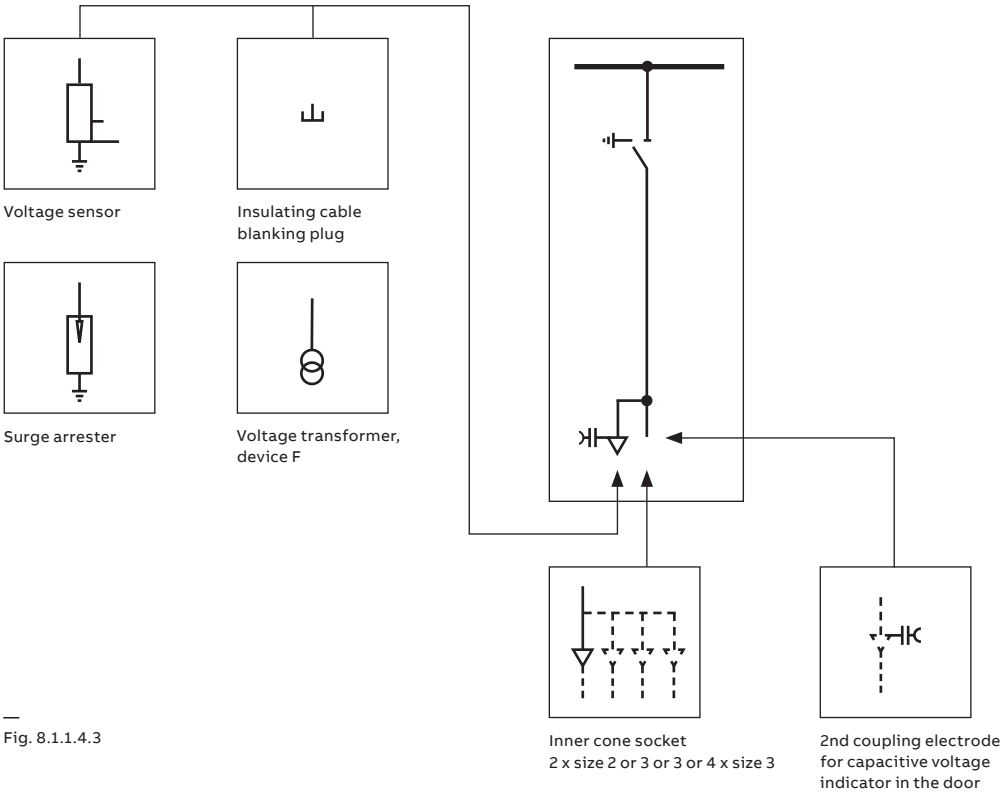

—
Fig. 8.1.1.4.3

—
Table 8.1.1.4.1: Overview of variants for cable termination panels

Insulating gas		SF_6	AirPlus
Panel width 600 mm:	U_r:	...36 kV	...36 kV
	I_r:	...1250 A (2 x size 2 or 3)	...1250 A (2 x size 2 or 3)
	I_p:	...40 kA	...31.5 kA
Panel width 800 mm:	U_r:	...36 kV	...36 kV
	I_r:	...2000 A (3 or 4 x size 3)	...2000 A (3 or 4 x size 3)
	I_p:	...40 kA	...31.5kA
Panel width 840 mm	U_r:	...36 kV	
	I_r:	...2500 A (3 or 4 x size 3)	on request
	I_p:	...40 kA	

—
Fig. 8.1.1.4.2.1: Cable termination panel, 1250 A

—
Fig. 8.1.1.4.2.2: Schematic of variants of cable termination panels with outer cone connection system

8.1.1.4.2. Cable termination panels with outer cone cable connection system

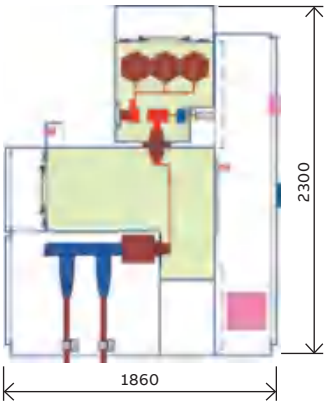

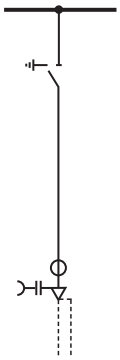

—
Fig. 8.1.1.4.2.1

—

Table 8.1.1.2.1: Overview of variants for cable termination panels with outer cone cable connection system

Insulating gas		SF_6	AirPlus
Panel width 600 mm:	U_r:	...36 kV	on request
	I_r:	...1250 A	
	I_p:	...40 kA	

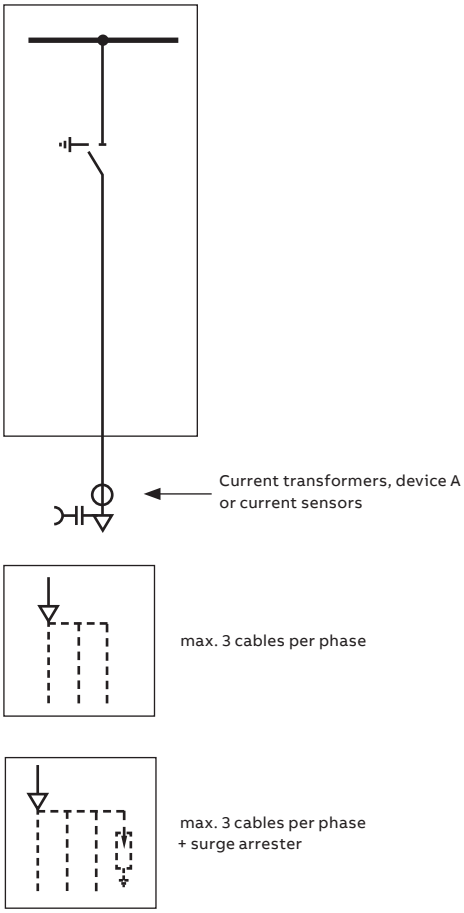

—
Fig. 8.1.1.4.2.2

—
Fig. 8.1.2.1.1.1: Sectionaliser panel 1250 A with block-type CT or sensor, device B

—
Fig. 8.1.2.1.1.2: Sectionaliser panel 2000 A with current transformer, device B and E

—
Fig. 8.1.2.1.1.3: Sectionaliser panel 2500 A (width 840 mm) with current transformers, device B

—
Fig. 8.1.2.1.1.4: Sectionaliser panel 3150 A (width 840 mm) with current transformers, device B

8.1.2. Busbar sectionaliser panels

8.1.2.1. Sectionaliser within a switchgear block

8.1.2.1.1. Version 1

The sectionaliser panel contains the circuit-breaker, two three position disconnectors and a block-type current transformer. In addition, sectionalisers can be fitted with current transformers between the circuit-breaker and the three position disconnectors.

In the sectionaliser panel, the position of the busbar changes from front to rear or vice versa.

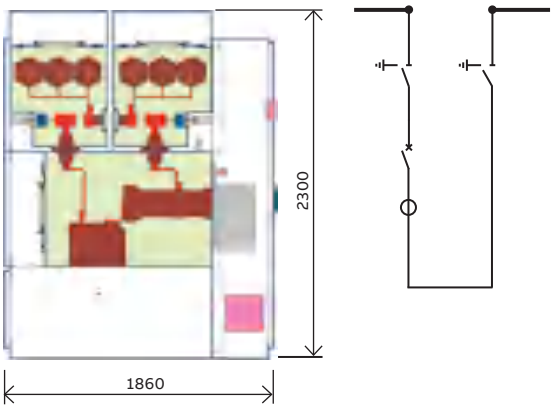

—
Fig. 8.1.2.1.1.1

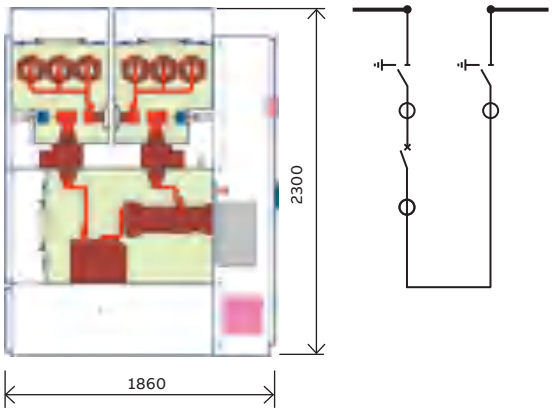

—
Fig. 8.1.2.1.1.2

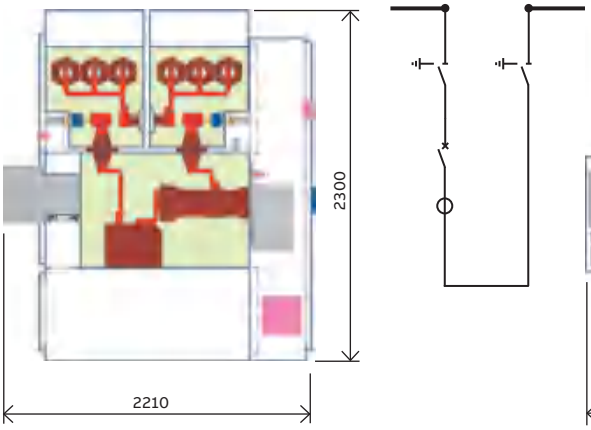

—
Fig. 8.1.2.1.1.3

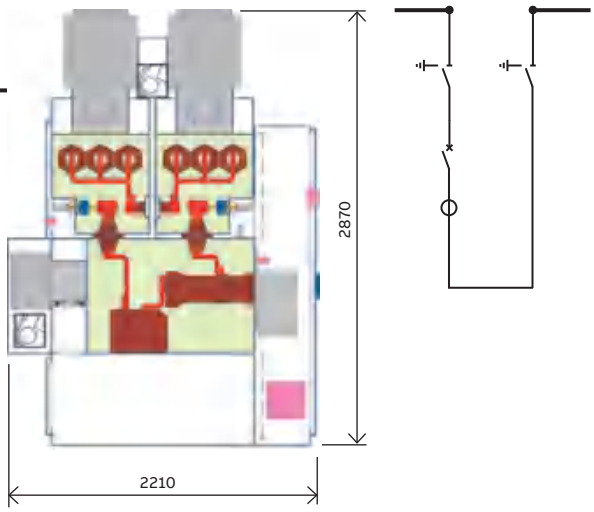

—
Fig. 8.1.2.1.1.4

—
Fig. 8.1.2.1.1.4: Schematic of variants of sectionaliser panels, version 1

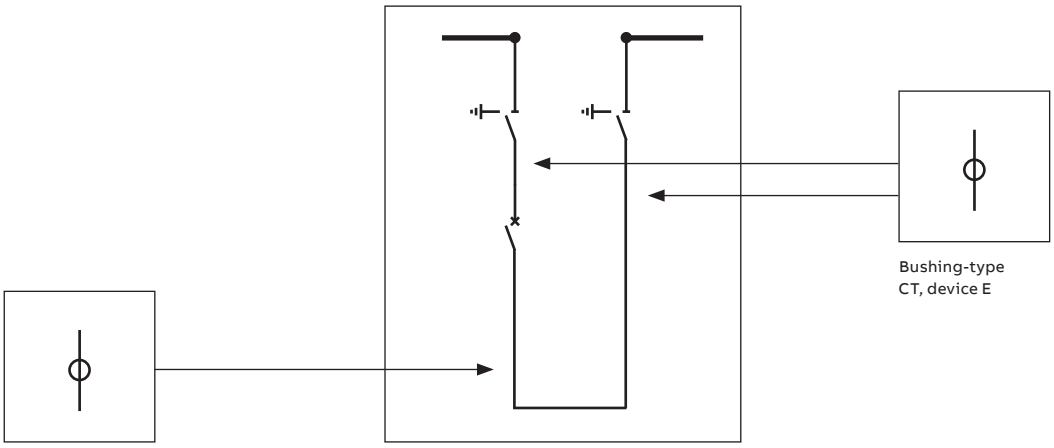

—
Table 8.1.2.1.1.1: Overview of variants for sectionaliser panels, version 1

Insulating gas			**SF_6**		**AirPlus**
Panel width 600 mm:	U_r: I_r: I_p:	...36 kV ...1250 A ...40 kA	without transformers	...36 kV ...1250 A ...31,5 kA	without transformers
			Block-type CT or sensor		Block-type CT or sensor
Panel width 800 mm:	U_r: I_r: I_p:	...36 kV ...1250 A oder ...2000 A ...40 kA	without transformers	...36 kV ...2000 A ...31,5 kA	without transformers
			Block-type CT or sensor		Block-type CT or sensor
			Bushing-type CT		Bushing-type CT
			Block-type CT or sensor + Bushing-type CT		Block-type CT or sensor + Bushing-type CT
Panel width 840 mm:	U_r: I_r: I_p:	...36 kV ...2500 A oder ...3150 A ...40 kA	without transformers		on request
			Block-type CT or sensor		
			Bushing-type CT		
			Block-type CT or sensor + Bushing-type CT		

—
Fig. 8.1.2.1.2.1: Sectionaliser panel 2000 A

—
Fig. 8.1.2.1.2.2: Riser panel 2000 A

—
Fig. 8.1.2.1.2.3: Sectionaliser panel 2500 A, panel width 840 mm

—
Fig. 8.1.2.1.2.4: Riser panel 2500 A, panel width 840 mm

—
Fig. 8.1.2.1.2.5: Schematic of variants of sectionaliser panels, version 2

8.1.2.1.2. Version 2

A change of the busbar position left and right of the sectionaliser panels is not necessary for this version. Two panels are used. The first panel includes the circuit-breaker and a three-position disconnector, the second circuit panel includes the second three-position disconnector, and a block-type current transformer.

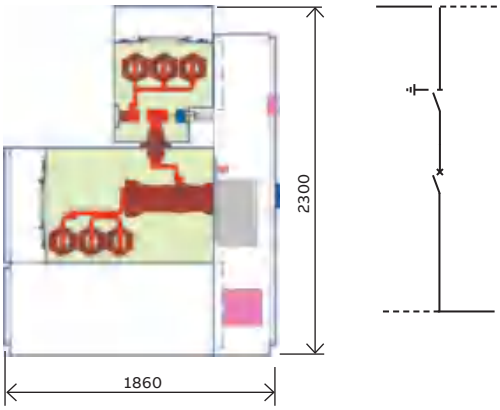

—
Fig. 8.1.2.1.2.1

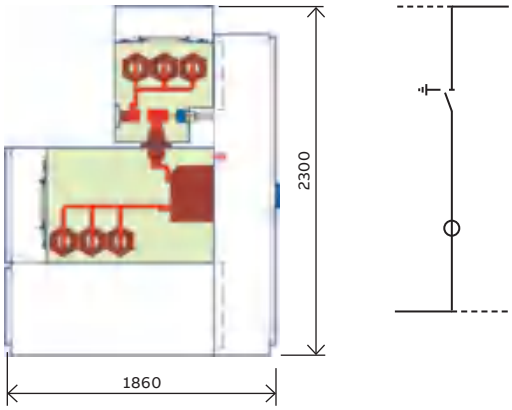

—
Fig. 8.1.2.1.2.2

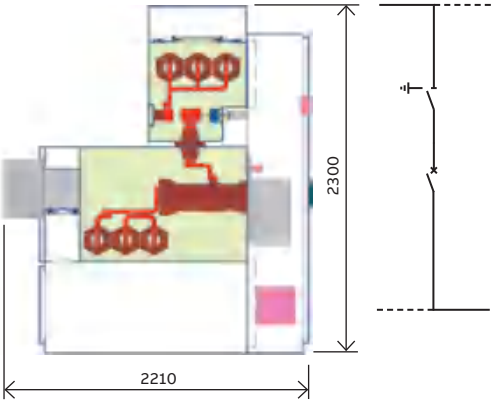

—
Fig. 8.1.2.1.2.3

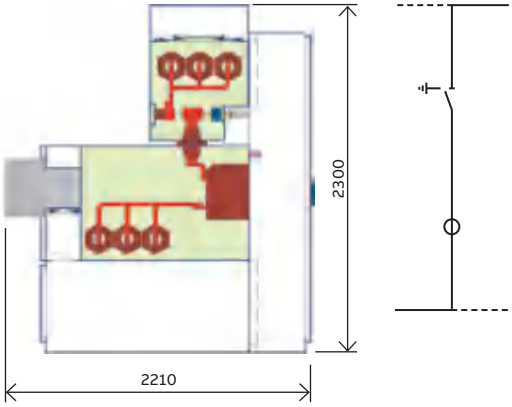

—
Fig. 8.1.2.1.2.4

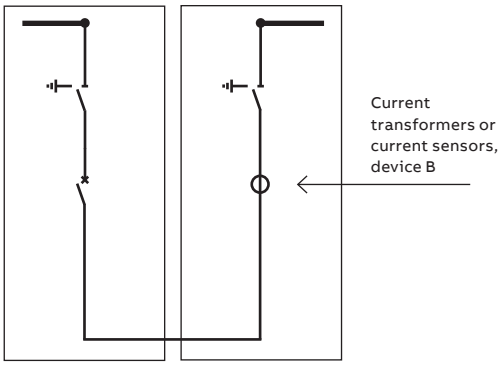

—
Fig. 8.1.2.1.2.5

—

Table 8.1.2.1.1.1: Overview of variants for sectionaliser panels, version 2

Insulating gas		SF_6	AirPlus
Panel width 800 mm:	U_r:	...36 kV	on request
	I_r:	...2000 A	
	I_p:	...40 kA	
Panel width 840 mm:	U_r:	...36 kV	
	I_r:	...2500 A	
	I_p:	...40 kA	

—
Fig. 8.1.2.2.1: Sectionaliser using cables (connection of two system blocks)

8.1.2.2. Sectionaliser using cables (connection of two system blocks)

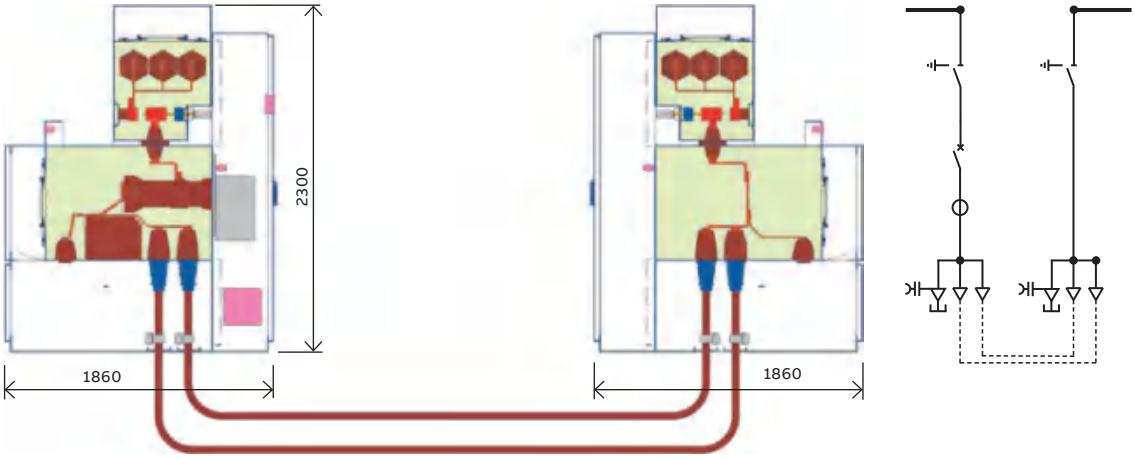

—
Fig. 8.1.2.2.1

The overview of variants can be found in sections 8.1.1.1 (feeder panels) and 8.1.1.4 (cable termination panels).

8.1.3. Metering Panels

The following methods of busbar metering are available:

The metering panel

The metering panel with a width of 600 mm contains isolatable voltage transformers or voltage sensors. Operation of the isolating system is performed at the low voltage compartment.

Integrated metering with plugged-in voltage transformers or voltage sensors

Sockets for plug-in voltage transformers or voltage sensors are provided above the busbar compartment in outgoing feeder panels with integrated measurement. The following limitations to the use of integrated measurement must be taken into account at the planning stage:

- For 800 mm wide panels including double feeder panels
- For panels without cooling systems
- Integrated metering in sectionaliser panels is possible with pressure relief at both sides.
- The distance from the end of the system with pressure relief duct must be three panel widths.
- The ceiling height must be at least 3000 mm.
- The transport unit height is 2300 mm.

The integrated busbar metering system with plugged-in and isolatable voltage transformers or voltage sensors

Above the busbar compartment of an outgoing feeder panel with integrated busbar metering, there are sockets for plug-in voltage transformers or voltage sensors and a series isolating device with optional auxiliary switches. As a snap-action operating mechanism is used, operation of the isolating device is even possible when the busbar is live. The following limitations must be taken into account in the planning when an integrated busbar metering system with isolatable voltage transformers or voltage sensors is used:

- For 600 mm and 800 mm wide panels including double feeder panels
- For panels without cooling systems
- Integrated metering in sectionaliser panels is possible with pressure relief at both sides.
- The distance from the end of the system with pressure relief duct must be three panel widths.
- The ceiling height must be at least 3500 mm.
- The transport unit height is 2330 mm.
- Gas work at site is necessary.

—
Fig. 8.1.3.1:
Metering panel (Example: Measurement of the front busbar)

—
Fig. 8.1.3.2:
Integrated busbar metering system with plugged-in voltage transformers (example for measurement of the rear busbar)

—
Fig. 8.1.3.3:
Integrated busbar metering system with plugged-in and isolatable voltage transformers for max. test voltages of 85 / 185 kV (example for measurement of the front busbar)

—
Fig. 8.1.3.4:
Integrated busbar metering system with plugged-in and isolatable voltage sensors for max. test voltages of 70 / 170 kV (example for measurement of the front busbar)

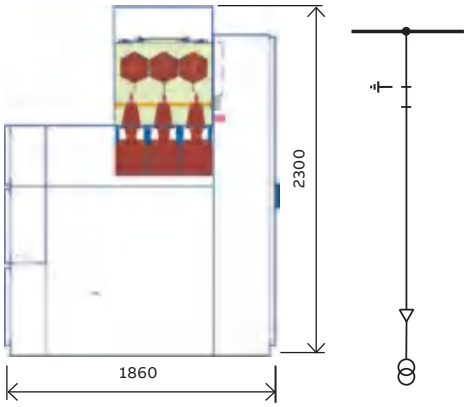

—
Fig. 8.1.3.1

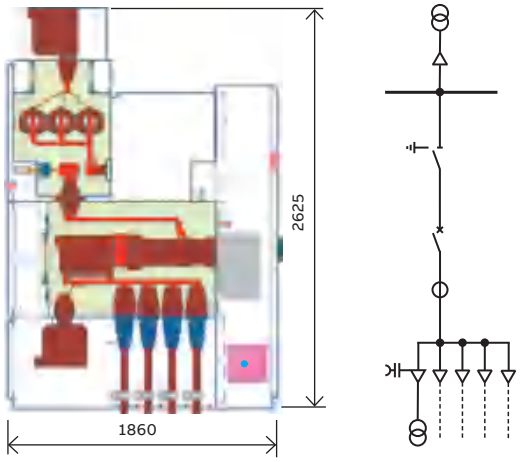

—
Fig. 8.1.3.2

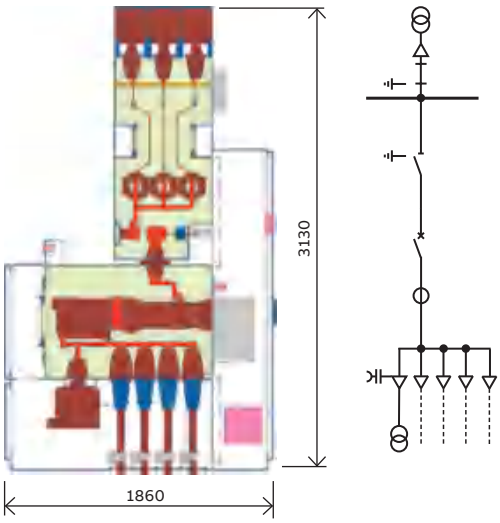

—
Fig. 8.1.3.3

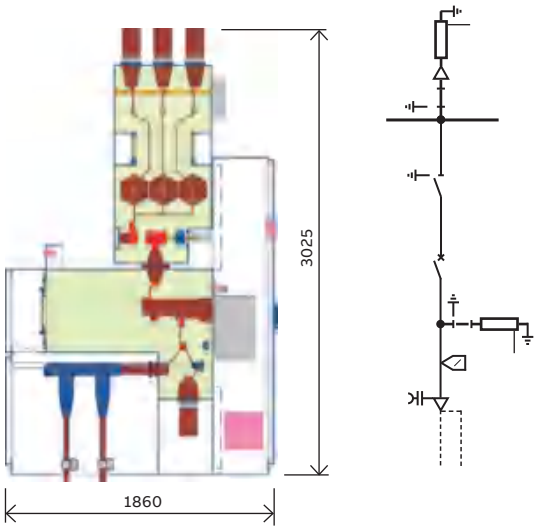

—
Fig. 8.1.3.4

—
Table 8.1.3.1: Overview of variants of metering panels

Insulating gas			**SF_6**		**AirPlus**
Panel width 600 mm:	U_r:	...36 kV	Metering panel, Integrated busbar measurement to fig. 8.1.3.3	...36 kV	Metering panel
Panel width 800 mm:	U_r:	...36 kV	Integrated busbar measurement to fig. 8.1.3.2 and fig. 8.1.3.3	...24 kV	Integrated busbar measurement to fig. 8.1.3.2

8.2. Panels in double busbar design

8.2.1. Feeder panels

8.2.1.1. Incoming and outgoing feeder panels with inner cone cable plug system

—
Fig. 8.2.1.1.1:
Feeder panel 1250 A with block-type transformer or sensor and two cables per phase

—
Fig. 8.2.1.1.2:
Feeder panel 2000 A with current and voltage transformer and three cables per phase

—
Fig. 8.2.1.1.3:
Feeder panel 2500 A (width 840 mm) with current and voltage transformer and four cables per phase

—
Fig. 8.2.1.1.4:
Feeder panel 3150 A (width 840 mm) with current and voltage transformer and four cables per phase

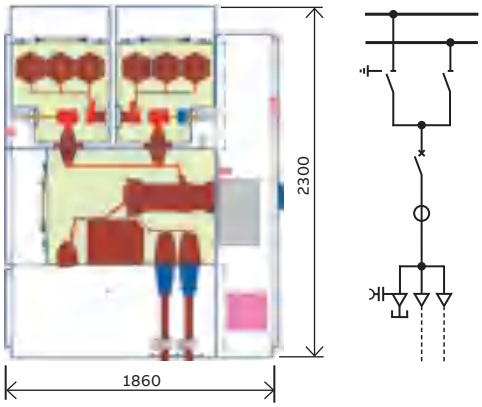

—
Fig. 8.2.1.1.1

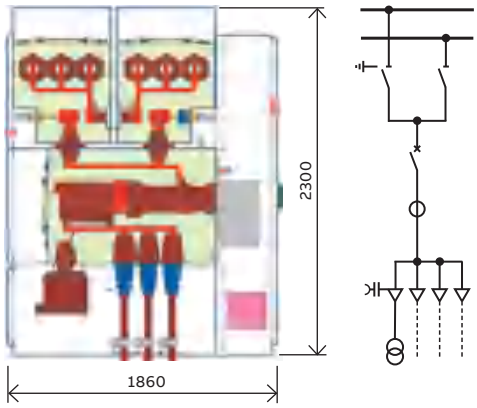

—
Fig. 8.2.1.1.2

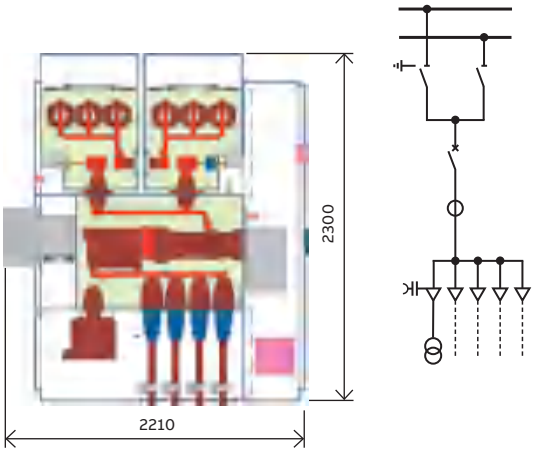

—
Fig. 8.2.1.1.3

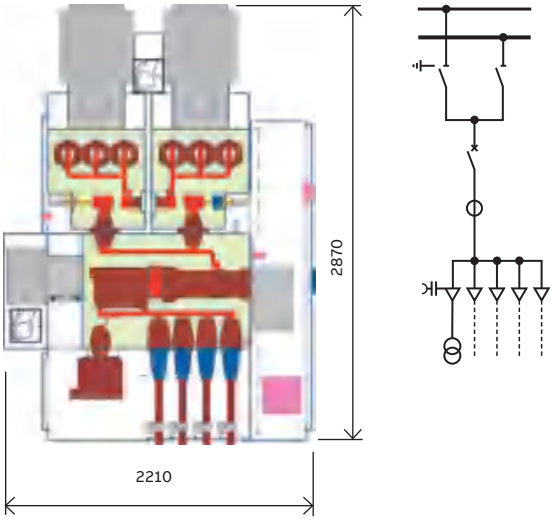

—
Fig. 8.2.1.1.4

—
Fig. 8.2.1.1.5:
Schematic of variants of incoming and outgoing feeder panels with inner cone termination system

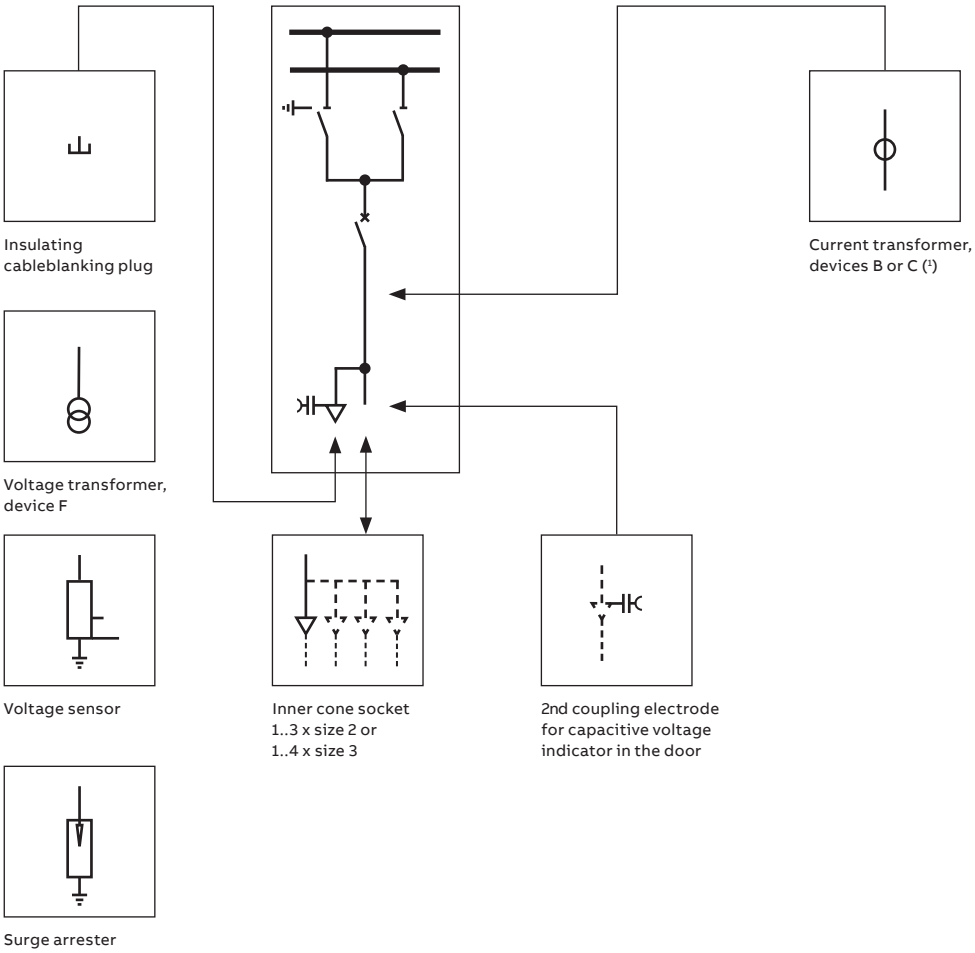

—
Table 8.2.1.1.1: Overview of variants of incoming and outgoing feeder panels with inner cone termination system

Insulating gas		SF_6	AirPlus
Panel width 600 mm:	U_r:	...36 kV	...36 kV
	I_r:	...800 A (1 x size 2)	...800 A (1 x size 2)
	I_r:	...1250 A (2...3 x size 2 and 1...2 x size 3)(1)	...1250 A (2...3 x size 2 and 1...2 x size 3)(1)
	I_p:	...40 kA (2)	...31.5 kA(2)
Panel width 800 mm:	U_r:	...36 kV	...36 kV
	I_r:	...1250 A (1...3 x size 3)(1)	...1250 A (1...3 x size 3)(1)
	I_r:	...2000 A (3...4 x size 3)(1)	...2000 A (3...4 x size 3)(1)
	I_p:	...40 kA	...31.5 kA
Panel width 840 mm:	U_r:	...36 kV	on request
	I_r:	...2500 A, ...3150 A (4 x size 3)	
	I_p:	...40 kA	

1. Device B: 1 and 2 cable sockets per phase , device C: 3 and 4 cable sockets per phase
2. When using socket size 2: At least two sockets are required

—
Fig. 8.2.1.2.1:
Feeder panel with outer cone and current and voltage sensors, 1250 A

—
Fig. 8.2.1.2.2:
Double feeder panel with current transformers
24 kV, 630 A

—
Fig. 8.2.1.2.3:
Feeder panel with outer cones, Example with current and voltage transformers, 2000 A

—
Fig. 8.2.1.2.4:
Feeder panel with outer cones and current and voltage sensors, 1250 A

—
Fig. 8.2.1.2.5:
Double feeder panel woth current sensors
24 kV, 630 A

8.2.1.2. Incoming and outgoing feeder panels with outer cone cable plug system

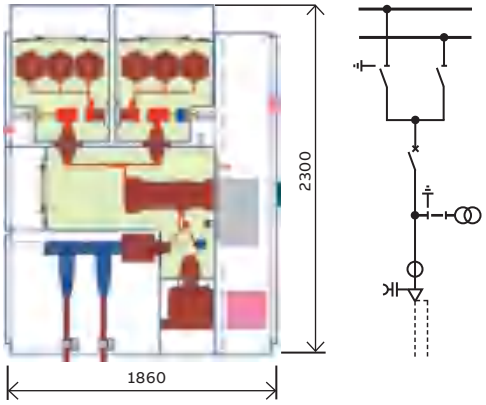

—
Fig. 8.2.1.2.1

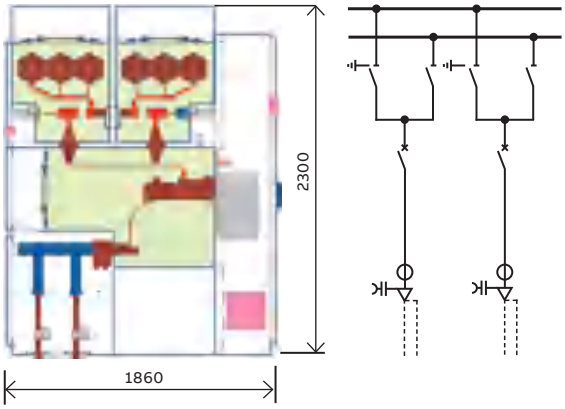

—
Fig. 8.2.1.2.2

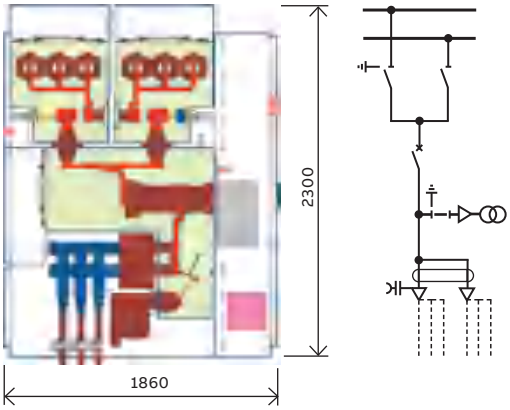

—
Fig. 8.1.1.2.3

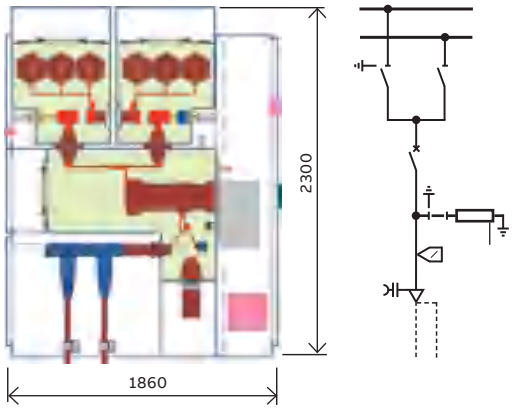

—
Fig. 8.2.1.2.4

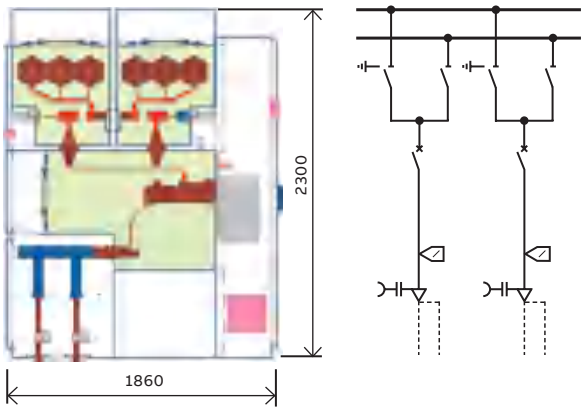

—
Fig. 8.2.1.2.5

—
Fig. 8.2.1.1.6:
Schematic of variants of incoming and outgoing feeder panels with outer cone termination system up to 1250 A

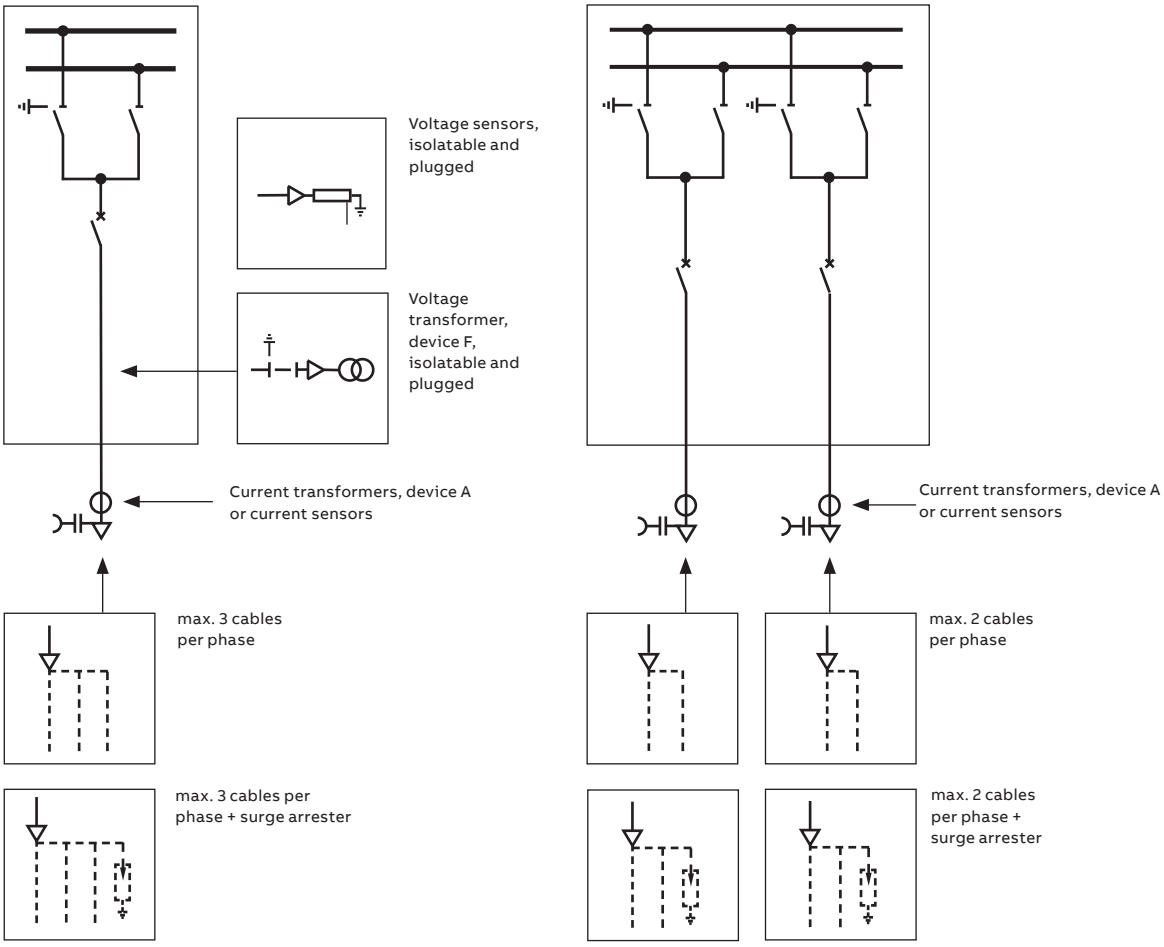

—
Table 8.2.1.2.1: Overview of variants of feeder panels with outer cone termination system

Insulating gas		SF_6	AirPlus
Panel width 600 mm:	U_r:	...36 kV	...36 kV
	I_r:	...1250 A	...1250 A
	I_p:	...40 kA	...31.5 kA
Double feeder panel	U_r:	...24 kV	...24 kV
Panel width 2 x 400 mm:	I_r:	...630 A	...630 A
	I_p:	...25 kA	...25 kA

—
Fig. 8.2.1.1.7:
Schematic of variants of incoming and outgoing feeder panels with outer cone termination system greater up to 2500 A

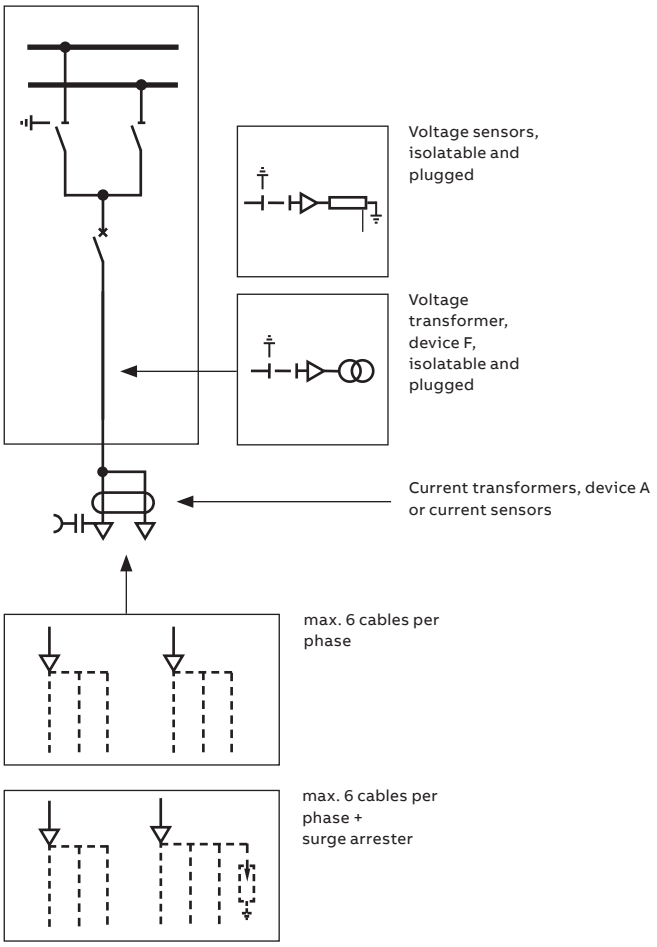

—
Table 8.2.1.2.2: Overview of variants of feeder panels with outer cone connection system up to 2500 A

Insulating gas		**SF_6**	**AirPlus**
Panel width 800 mm:	U_r:	...36 kV	on request
	I_r:	...2000 A	
	I_p:	...40 kA	
Panel width 840 mm:	U_r:	...36 kV	on request
	I_r:	...2500 A	
	I_p:	...40 kA	

—
Fig. 8.2.1.2.3:
Double feeder panel

Top: Section view of version with two cables per phase and surge arresters

Bottom: Single line diagram with gas and cable compartment schematic

Deviations for double feeder panels

The structure of the double feeder panel deviates from that of a conventional outgoing feeder panel as described below.

- The double feeder panel facilitates even more compact station planning for systems up to 24 kV.
- The width (= transport width) of a double feeder panel is 800 mm, with two outgoing feeders of 400 mm width grouped together in the double feeder panel. The busbar compartment for the two feeders in a double feeder panel is a continuous gas compartment extending over the panel width of 800 mm.
- The two circuit-breaker compartments in a double feeder panel are two independent units.
- Only the outer cone plug system (one or two cables per phase) to EN 50181, type C is used.
- Only ring core current transformers or ringcore sensors are used.
- Two separate low voltage compartment doors (width 400 mm) are fitted.
- Technical data which deviate from the conventional panel (compare section 4):

U_r:	...24 kV
I_k:	...25 kA
I_r (feeder):	...630 A
I_r (busbar):	...3150 A

Internal arc classification according to IEC 62271-200

Classification IAC	AFLR
Internal arc	25 kA 1 s

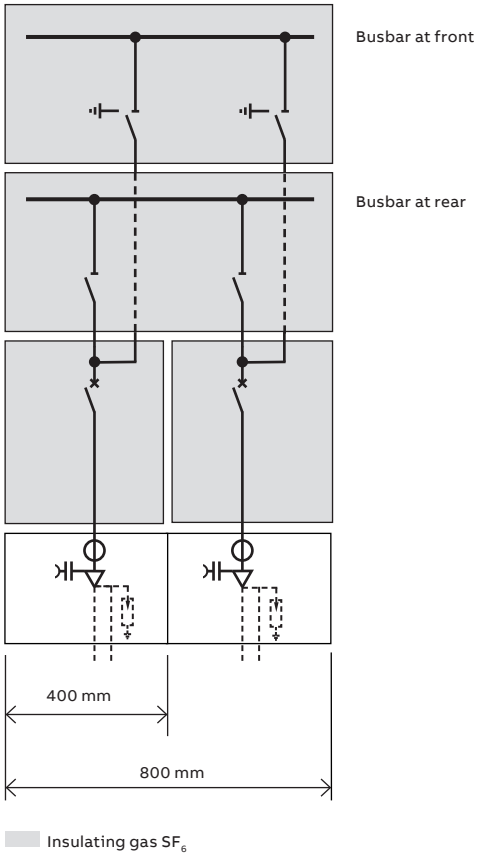

—
Fig. 8.2.1.2.3:

—
Fig. 8.2.1.3.1:
Cable termination panel 1250 A (Example with continuous busbar at the front)

—
Fig. 8.2.1.3.2:
Cable termination panel 2000 A (Example with continuous busbar at the rear and voltage transformer on the outgoing feeder)

—
Fig. 8.2.1.4.3:
Schematic of variants of cable termination panels with inner cone connection system

8.2.1.3. Cable termination panels

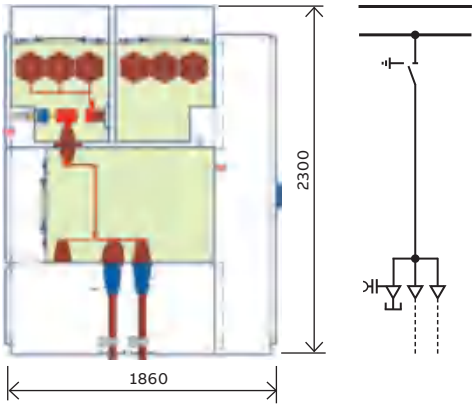

—
Fig. 8.2.1.3.1

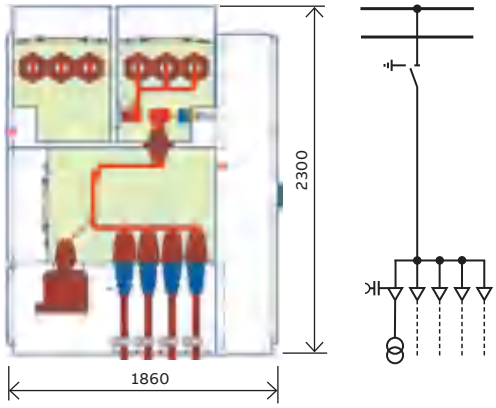

—
Fig. 8.2.1.3.2

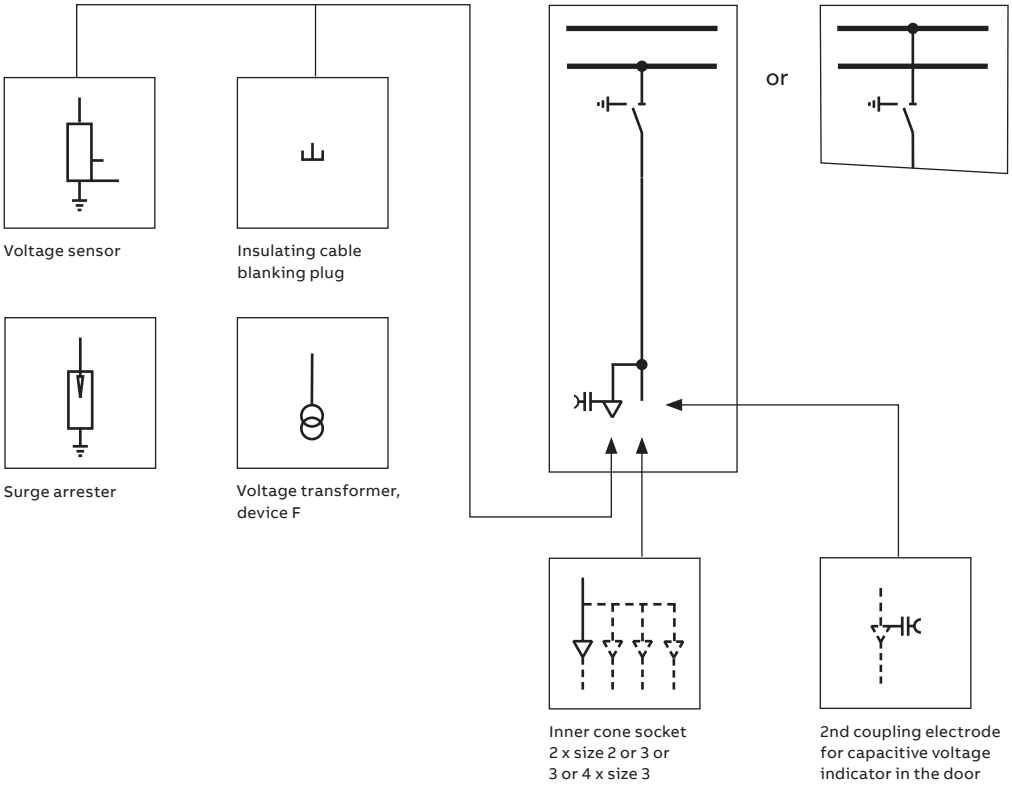

—
Fig. 8.2.1.3.3

—
Table 8.2.1.3.1: Overview of variants for cable termination panels

Insulating gas		SF_6	AirPlus
Panel width 600 mm:	U_r:	...36 kV	...36 kV
	I_r:	...1250 A (2 x size 2 or 3)	...1250 A (2 x size 2 or 3)
	I_p:	...40 kA	...31.5 kA
Panel width 800 mm:	U_r:	...36 kV	...36 kV
	I_r:	...2000 A (3 size 4 x size 3)	...2000 A (3 or 4 x size 3)
	I_p:	...40 kA	...31.5kA
Panel width 840 mm:	U_r:	...36 kV	on request
	I_r:	...2500 A, ...3150 A (4 x size 3)	
	I_p:	...40 kA	

—
Fig. 8.2.2.1.1: Sectionaliser panel for the front busbar, 2000 A

—
Fig. 8.2.2.1.2: Riser panel for the front busbar, 2000 A

—
Fig. 8.2.2.1.3: Schematic of variants of coupling panels

8.2.2. Coupling panels

8.2.2.1. Sectionaliser within a switchgear block

Two panels are required for a complete busbar sectionaliser. The sectionaliser panel contains the circuit-breaker and a three position disconnector. The riser panel contains a three position disconnector. Installation variants “sectionaliser left – riser right” and vice versa are possible.

In order to ensure that the lower busbar bushings are aligned, the two corresponding panels must either be equipped with or without bushing type CTs.

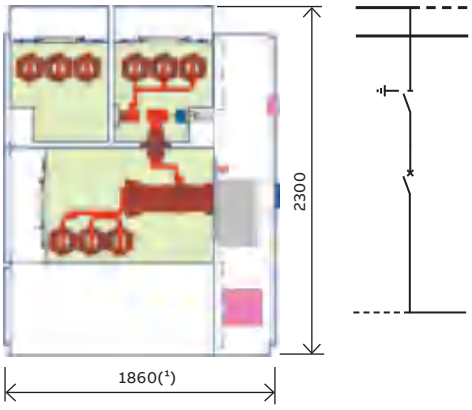

—
Fig. 8.2.2.1.1

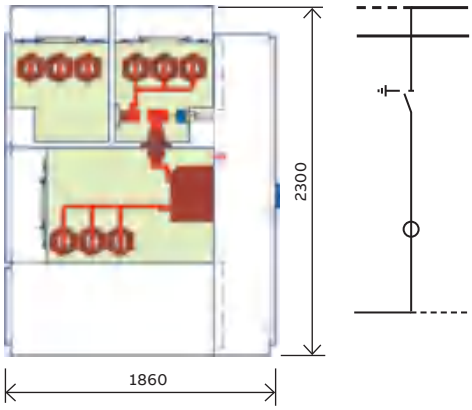

—
Fig. 8.2.2.1.2

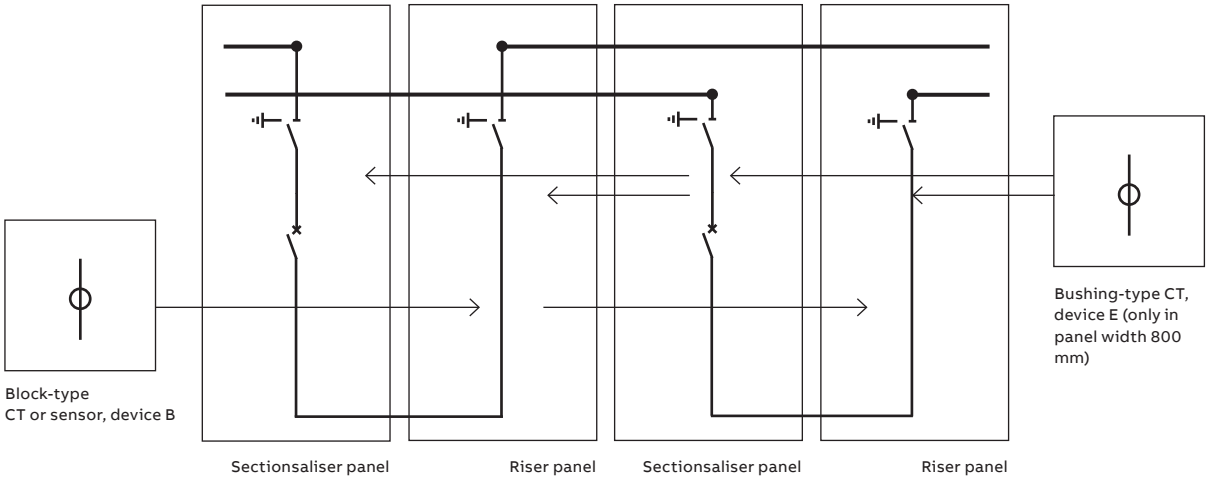

—
Fig. 8.2.2.1.3

—
Table 8.2.2.1.1: Overview of variants for couplings within a switchgear block

Insulating gas				SF$_6$			AirPlus
			Sectionaliser panel	Riser panel		Kuppelfeld	Hochführfeld
Panel width 600 mm:	U_r: ...36 kV I_r: ...1250 A I_p: ...40 kA		without transformers	Block-type CT or sensor	..36 kV ...1250 A ...31,5 kA	without transformers	Block-type CT or sensor
Panel width 800 mm:	U_r: ...36 kV I_r: ...2000 A I_p: ...40 kA		without transformers	without transformers	...36 kV ...2000 A ...31,5 A	without transformers	without transformers
			without transformers	Block-type CT or sensors		without transformers	Block-type CT or sensors
			Bushing-type CT	Bushing-type CT		Bushing-type CT	Bushing-type CT
			Bushing-type CT	Bushing-type CT + Block-type CT		Bushing-type CT	Bushing-type CT + Block-type CT
Panel width 840 mm:	U_r: ...36 kV I_r: ...2500 A I_p: ...40 kA		without transformers	without transformers		on request	on request
			without transformers	Block-type CT or sensors			
			Bushing-type CT	Bushing-type CT			
			Bushing-type CT	Bushing-type CT + Block-type CT			

1. When using AirPlus, heat sinks are required behind the circuit-breaker compartment. The panel depth in this case is 2210 mm.

—
Fig. 8.2.2.2.1: Connection of two system blocks using cables (bus sectionaliser), 1250 A

—
Fig. 8.2.2.3.1: Bus coupler, 1250 A with block-type CTs or sensors

—
Fig. 8.2.2.3.2: Bus coupler, 2000 A, with CTs between the circuit-breaker and the three position disconnectors

—
Fig. 8.2.2.3.3: Bus coupler, 2500 A (width 840 mm) with block-type CTs or sensors

—
Fig. 8.2.2.3.4: Bus coupler, 3150 A (width 840 mm) with block-type CTs or sensors

8.2.2.2. Sectionaliser using cables connection of two systemblocks)

Two panels are required for a complete busbar sectionaliser. The sectionaliser panel contains the circuit-breaker and a three position disconnector.

The riser panel contains a three position disconnector. The overview of variants can be found in sections 8.2.1.1 (feeder panels) and 8.2.1.3 (cable termination panels).

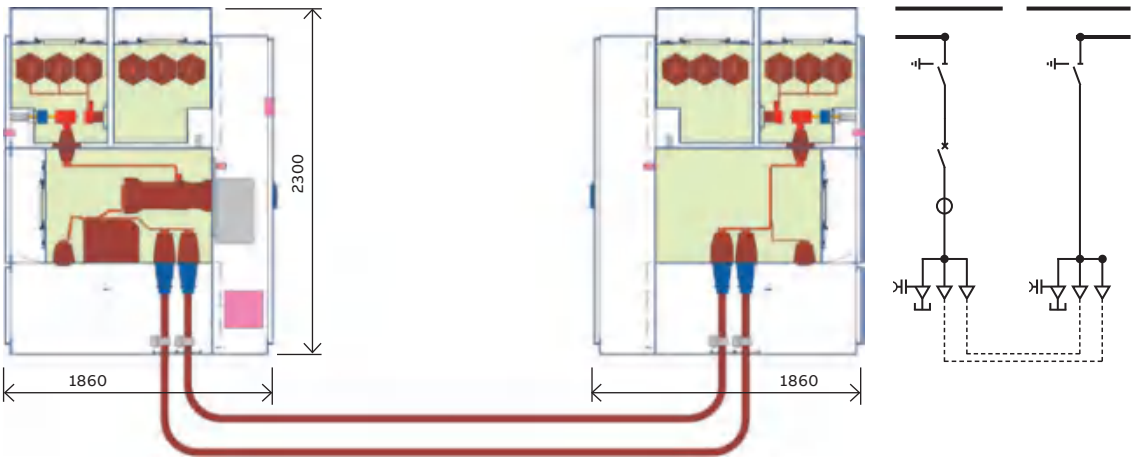

—
Fig. 8.2.2.2.1

8.2.2.3. Bus coupler

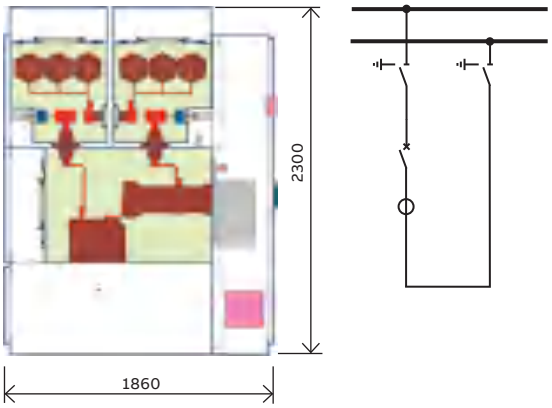

—
Fig. 8.2.2.3.1

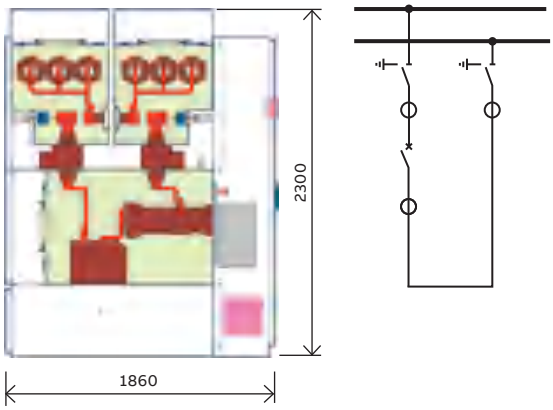

—
Fig. 8.2.2.3.2

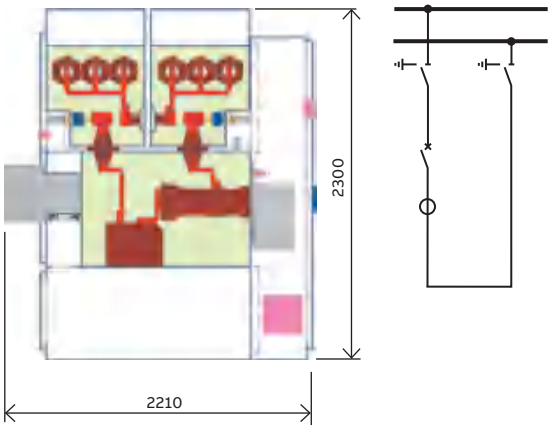

—
Fig. 8.2.2.3.3

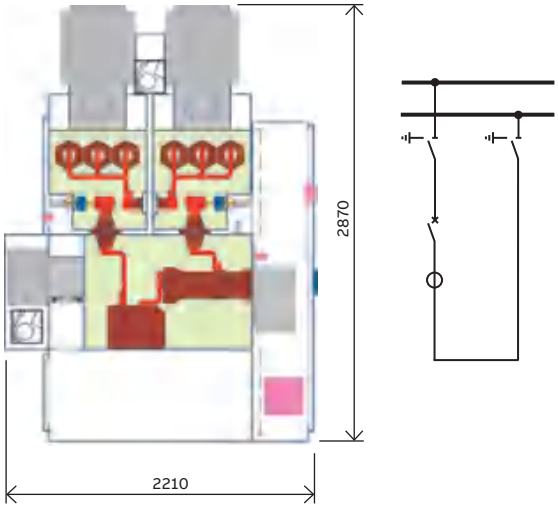

—
Fig. 8.2.2.3.4

—
Fig. 8.2.2.3.5:
Schematic of variants of coupling panels

—
Fig. 8.2.3.1:
Bus coupler without circuit-breaker 2000 A

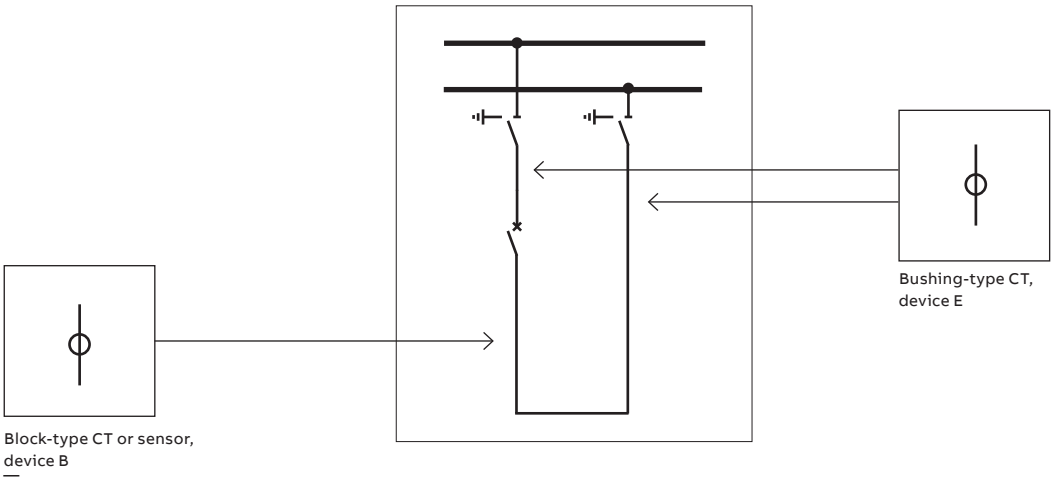

—
Fig. 8.2.2.3.5

—
Table 8.2.2.3.1: Overview of variants for bus coupler

Insulating gas			SF_6		AirPlus
Panel width 600 mm:	U_r:	...36 kV	without transformers	...36 kV	without transformers
	I_r:	...1250 A		...1250 A	
	I_p:	...40 kA		...31,5 kA	
			Block-type CT or sensor		Block-type CT or sensor
Panel width 800 mm:	U_r:	...36 kV	without transformers	...36 kV	without transformers
	I_r:	...1250 A or ...2000 A	Block-type CT or sensor	...2000 A	Block-type CT or sensor
	I_p:	...40 kA	Bushing-type CT	...31,5 kA	Bushing-type CT
			Block-type CT or sensor + Bushing-type CT		Block-type CT or sensor + Bushing-type CT
Panel width 840 mm:	U_r:	...36 kV	without transformers		
	I_r:	...2500 A or ...3150 A	Block-type CT or sensor		
	I_p:	...40 kA	Bushing-type CT		on request
			Block-type CT or sensor + Bushing-type CT		

8.2.3 Bus sectionaliser

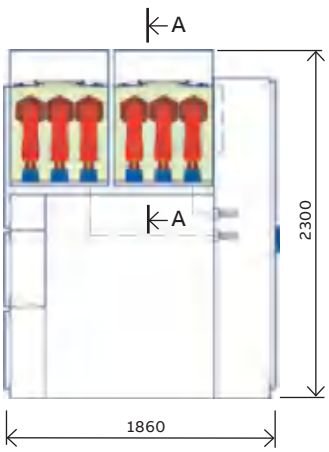

Section A-A

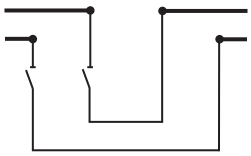

—
Fig. 8.2.3.1

—
Table 8.2.3.1: Overview of variants for the bus coupler panels without circuit-breaker

Insulating gas		SF_6	AirPlus
Panel width 800 mm:	U_r:	...36 kV	on request
	I_r:	...2000 A or	
	I_r:	...2500 A (cooling only with heat sinks)	
	I_p:	...40 kA	

8.2.4. Metering Panels

The following methods of busbar metering are available:

The metering panel

The metering panel with a width of 600 mm contains isolatable voltage transformers or voltage sensors. Operation of the isolating system is performed at the low voltage compartment.

Integrated metering with plugged-in voltage transformers or voltage sensors

Sockets for plug-in voltage transformers or voltage sensors are provided above the busbar compartment in outgoing feeder panels with integrated measurement. The following limitations to the use of integrated measurement must be taken into account at the planning stage:

- For 800 mm wide panels including double feeder panels
- For panels without cooling systems
- The distance from the end of the system with pressure relief duct must be three panel widths.
- The ceiling height must be at least 3000 mm.
- The transport unit height is 2300 mm.

The integrated busbar metering system with plugged-in and isolatable voltage transformers or voltage sensors

Above the busbar compartment of an outgoing feeder panel with integrated busbar metering, there are sockets for plug-in voltage transformers or voltage sensors and a series isolating device with optional auxiliary switches. As a snap-action operating mechanism is used, operation of the isolating device is even possible when the busbar is live. The following limitations must be taken into account in the planning when an integrated busbar metering system with isolatable voltage transformers or voltage sensors is used:

- For 600 mm and 800 mm wide panels including double feeder panels
- For panels without cooling systems
- The distance from the end of the system must be three panel widths to the side pressure relief duct.
- The ceiling height must be at least 3500 mm.
- The transport unit height is 2330 mm
- Gas work at site is necessary.

—
Fig. 8.2.4.1:
Metering Panel

—
Fig. 8.2.4.2: :
Integrated busbar metering system with plugged-in voltage transformers

—
Fig. 8.2.4.3:
Integrated busbar metering system with plugged-in and isolatable voltage transformers for max. test voltages of 85 / 185 kV

—
Fig. 8.2.4.4:
Integrated busbar metering system with plugged-in and isolatable voltage sensors for max. test voltages of 70 / 170 kV

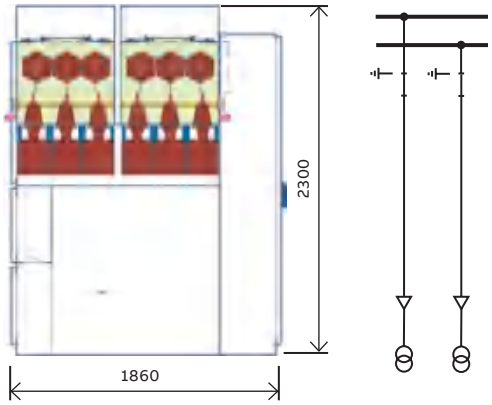

—
Fig. 8.2.4.1

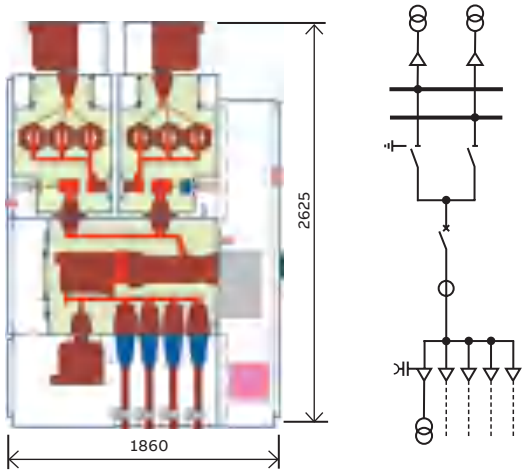

—
Fig. 8.2.4.2

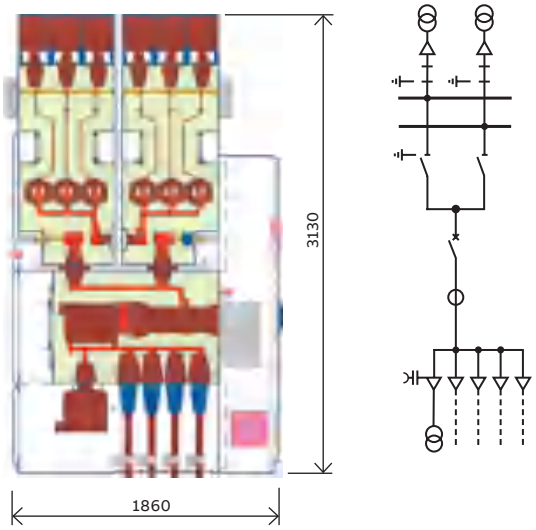

—
Fig. 8.2.4.3

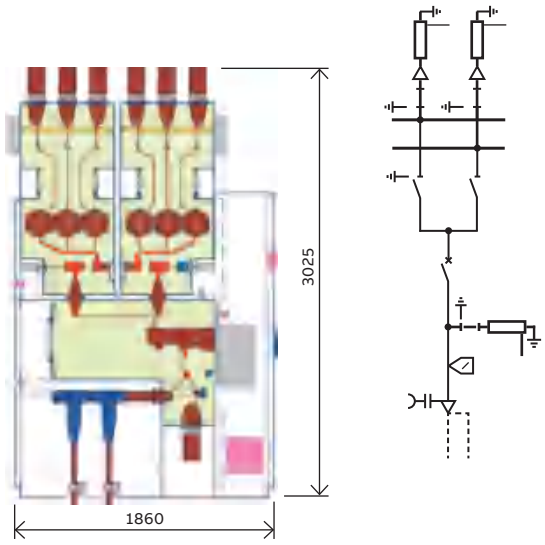

—
Fig. 8.2.4.4

—
Table 8.2.4.1: Overview of variants of metering panels

Insulating gas			**SF_6**		**AirPlus**
Panel width 600 mm:	U_r:	...36 kV	Metering panel, Integrated busbar measurement to fig. 8.2.4.3	...36 kV	Metering panel
Panel width 800 mm:	U_r:	...36 kV	Integrated busbar measurement to fig. 8.2.4.2 and fig. 8.2.4.3	...24 kV	Integrated busbar measurement to fig. 8.2.4.2

—
Fig. 8.3.1:
Termination panels for fully insulated bars (Example: connection of two system blocks, 36 kV, 40 kA, 2000 A)

—
Fig. 8.3.2:
Panel for capacitor switching (36 kV, 40 kA, 800 A)

—
Fig. 8.3.3:
Panel with additional three-position disconnector and cable earthing switch (36 kV, 40 kA, 1250 A)

8.3. Design to order panels

The panel variants presented in sections 8.1 to 8.2 are standard panels. Should you require panel variants which are not listed there when planning your switchgear, please contact the ABB office responsible for your area. Our design team will be pleased to submit and implement technical proposals to fulfil your requirements.

IAC qualification according to IEC 62271-200 of special panels may not be possible in all cases.

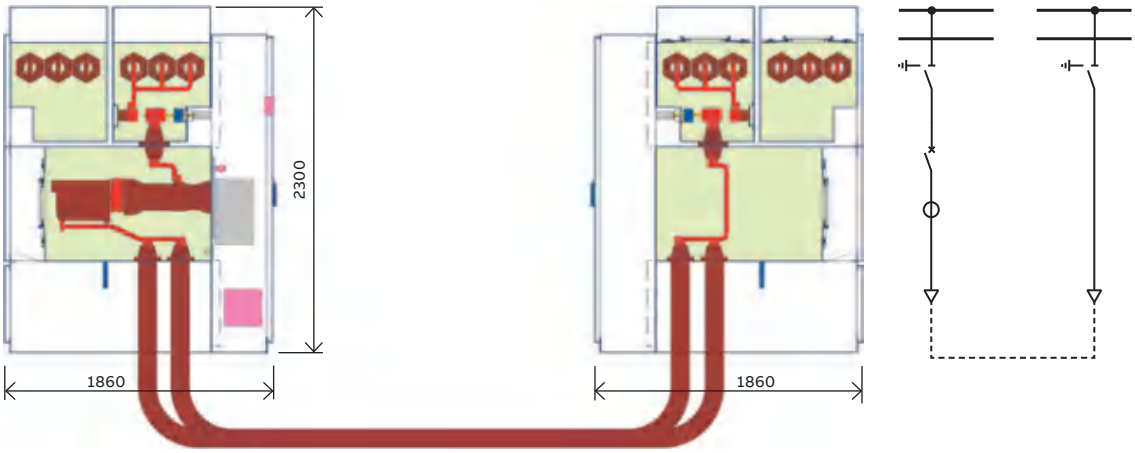

—
Fig. 8.3.1

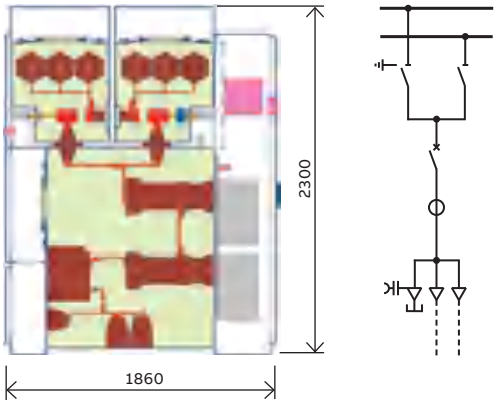

—
Fig. 8.3.2

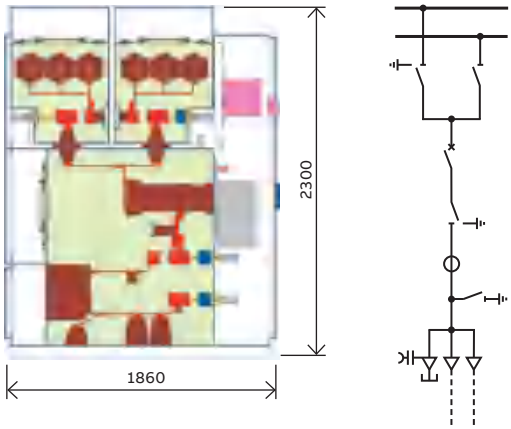

—
Fig. 8.3.3

—
Fig. 8.4.1.1:
Cooling of feeder panels for a feeder current up to 2500 A

—
Fig. 8.4.1.2:
Cooling of feeder panels for a feeder current up to 3150 A

8.4. Panels for rated currents > 2000 A
At a maximum ambient air temperature of 40 °C, a maximum 24 h average ambient air temperature of 35 °C and a rated frequency of 50 Hz (standard operating conditions), no cooling facilities are required for a rated current of up to 2000 A.

For higher rated currents, depending on the application, the following cooling measures are required:

B C: Heat sink on the busbar compartment
B1 C1: Heat sink on the busbar compartment within the pressure relief duct
D: Heat sink at the circuit-breaker compartment
E: Radial flow fan below the heat sink D
F: Radial flow fan at the heat sink B and / or C

The cooling facilities required at
- higher ambient air temperatures and / or
- higher rated currents and / or
- a rated frequency of 60 Hz

may deviate from the cooling methods stated above. Such special cases can be investigated on request.

8.4.1. Feeder Panels for rated currents > 2000 A
The panel width of feeder panels for a rated current > 2000 A is generally 840 mm. For rated currents up to 2500 A (fig. 8.4.1.1), a heat sink is used at the circuit-breaker compartment. With a rated current of up to 3150 A (fig. 8.4.1.2) heat sinks on the busbar compartments and fans are also used.

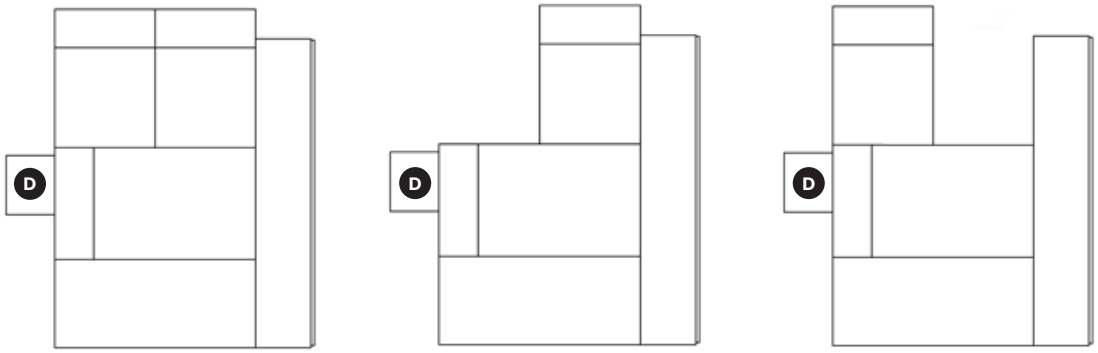

Double busbar | Single busbar at the front | Single busbar at the rear

—
Fig. 8.4.1.1

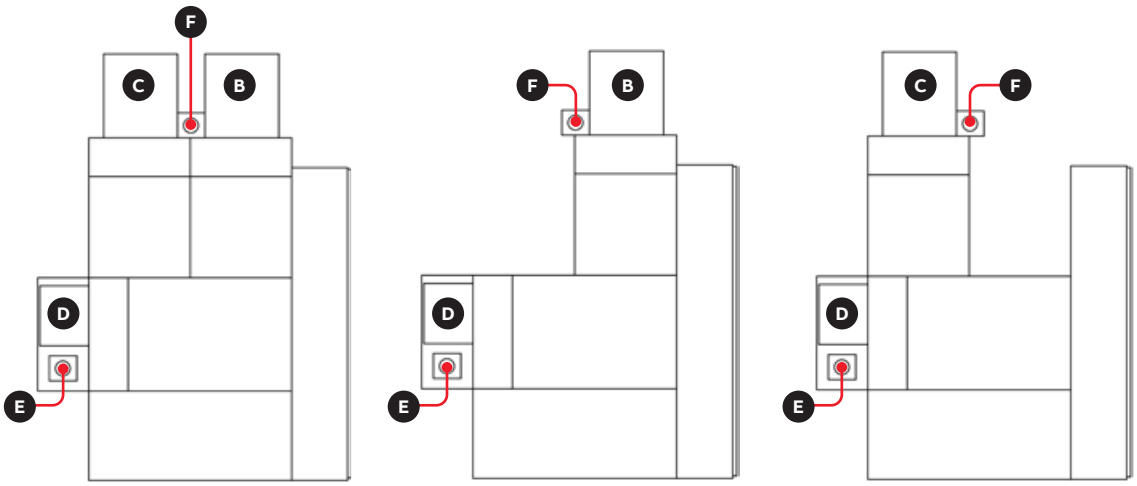

Double busbar | Single busbar at the front | Single busbar at the rear

—
Fig. 8.4.1.2

—
Fig. 8.4.2.1:
Cooling with a busbar current up to 3150 A

—
Fig. 8.4.2.2:
Cooling with a busbar current up to 3000 A

8.4.2. Busbar current > 2500 A

With a busbar current of up to 3150 A, heat sinks on the busbar compartments are required on each panel (fig. 8.4.2.1). Up to a busbar current of maximum 3000 A, factory-installed heat sinks can be used on the busbar compartments. These heat sinks are located inside the pressure relief channels (fig. 8.4.2.2).

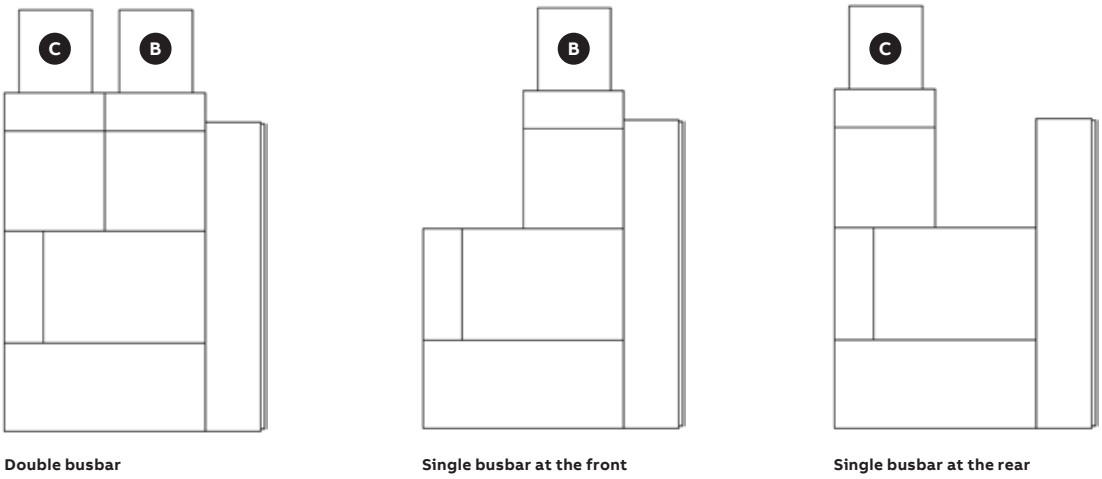

—
Fig. 8.4.2.1

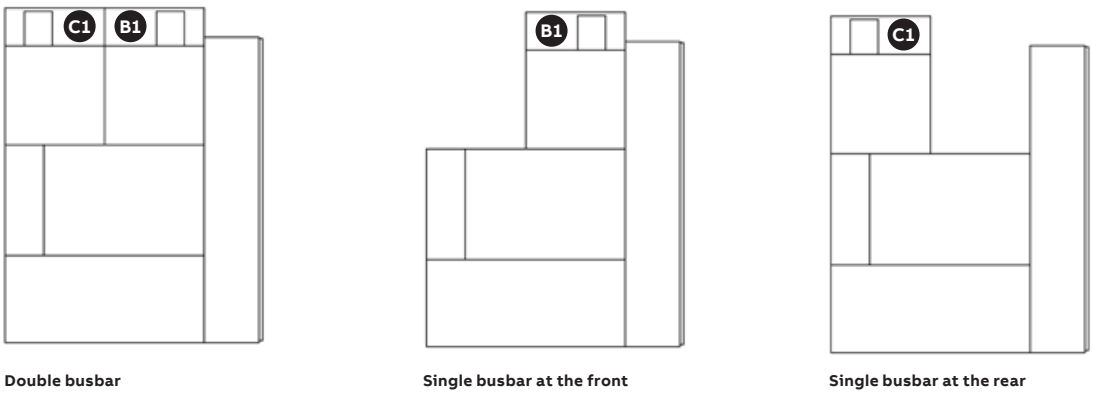

—
Fig. 8.4.2.2

—
Fig. 8.4.3.1: Cooling with sectionaliser or bus coupler panels with a busbar current up to 2500 A

—
Fig. 8.4.3.2: Cooling with sectionaliser or bus coupler panels with a busbar current up to 3150 A

8.4.3. Sectionalisers and bus couplers for a rated current > 2000 A

Coupling panels on double busbar systems up to 2500 A are equipped with a heat sink behind the circuit-breaker compartment as well as heat sinks C1 and B1 (fig. 8.4.3.1). For a rated current of a maximum of 3150 A, sectionalisers are available for single busbar systems and bus coupler panels for double busbar systems. Heat sinks behind the busbar compartment and fans are used (fig. 8.4.3.2).

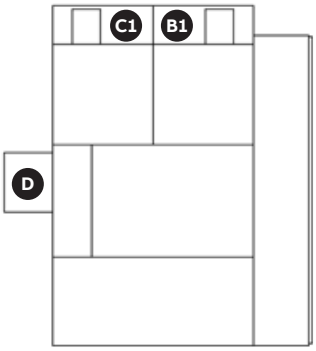

—
Fig. 8.4.3.1

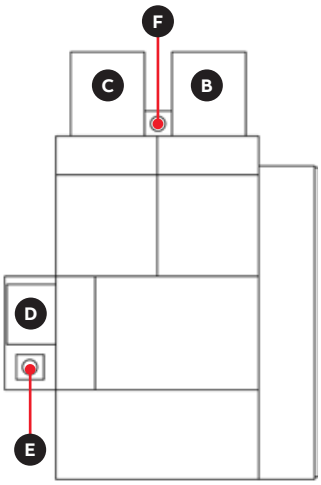

—
Fig. 8.4.3.2

9. Arrangement of panels

Arrangement of panels with an operating current greater than 2000 A and panels with integrated busbar measurement

The following is to be observed when installing panels with cooling facilities and panels with busbar measurement:

- Panels with heat sinks (B or C, section 8.4) or with busbar measurement can be positioned from the fourth panel at the absorber end onwards (section 7.16). (The distance from the absorber must be at least one panel width.)
- Coupling panels with a width of 840 mm which are not equipped with heat sinks can be positioned from the third panel onwards.

Further conditions for the use of integrated busbar measurement can be found in sections 8.1.3, 8.2.4.

10. Busbar earthing

—
Fig. 10.1.1: Busbar earthing by earthing set, double busbar

—
Fig. 10.2.1: Busbar earthing by bus coupler, double busbar

—
Fig. 10.2.2: Busbar earthing by sectionaliser, single busbar

This section outlines the ways in which the busbar can be earthed. The details of these operations can be found in the relevant instruction manuals.

10.1. Earthing the busbar by means of an earthing set
With the outgoing feeder earthed, the test sockets can be fitted with an earthing set (fig. 7.9.5) connected to the main earthing bar. Earthing of the busbar is effected via the closed feeder disconnector and subsequently closed circuit-breaker (see fig. 10.1.1).

10.2. Earthing the busbar by means of a sectionaliser and riser or bus coupler
Earthing is effected by the three position disconnector and the circuit-breaker in a bus coupler (see fig. 10.2.1) or bus sectionaliser (see fig. 10.2.2).

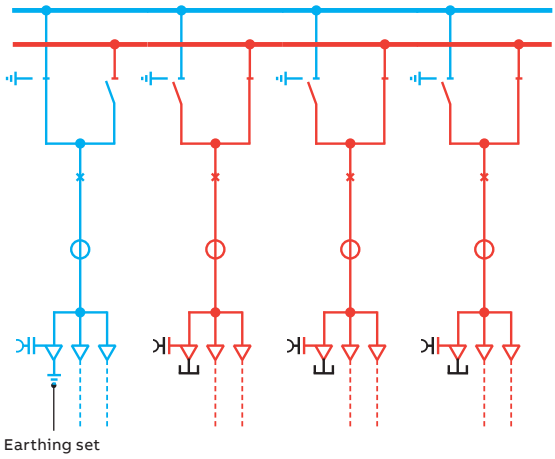

—
Fig. 10.1.1

Red: Energized areas
Blue: Grounded areas
Black: Undefined potential

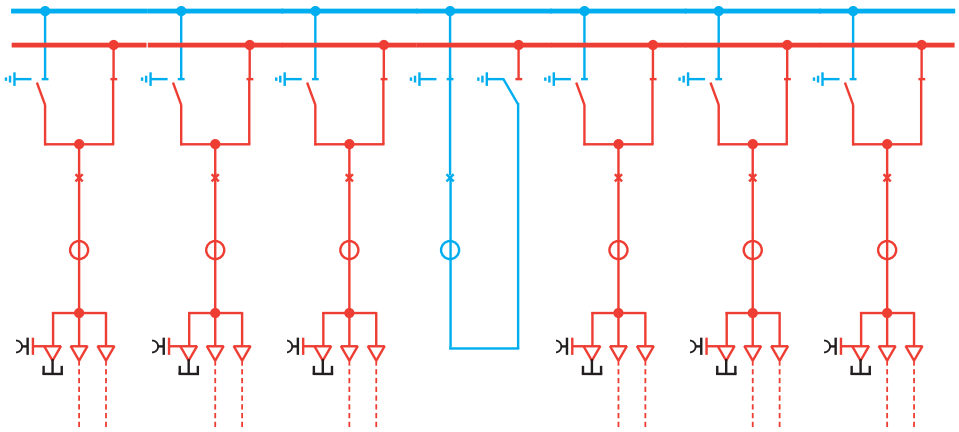

—
Fig. 10.2.1

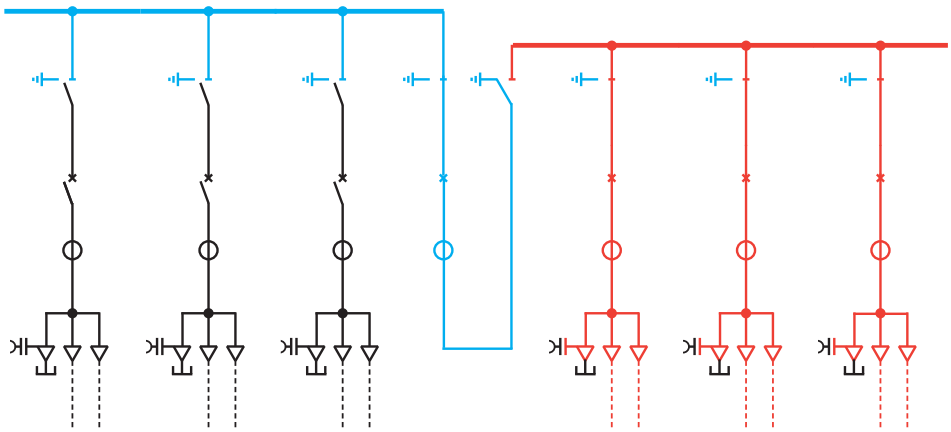

—
Fig. 10.2.2

11. Building planning

11.1. Site requirements
The switchgear can be installed:
- On a concrete floor, or
- On a raised false floor

Concrete floor
A concrete floor requires a foundation frame set into the floor topping. The evenness and straightness tolerances for the base of the switchgear system are ensured by the foundation frame. The foundation frame can be supplied by ABB. Floor openings for power and control cables can be configured as cutouts for each panel, as continuous cutouts (one each for power and control cables) or as drill holes. The floor openings are to be free from eddy currents (drill holes for power cables three phase – without ridges in between).

False floor
Below the switchgear, the supporting sections of the raised false floor serve as a base for the panels. A foundation frame is not as a rule necessary.

Pressure stress on the switchgear room
With pressure relief inside the switchgear room, a pressure rise in the room can be expected in the – highly unlikely – event of an internal arc fault. This is to be taken into account when planning the building. The pressure rise can be calculated by ABB on request. Pressure relief openings in the switchgear room may be necessary.

Ventilation of the switchgear room
Lateral ventilation of the switchgear room is recommended.

Service conditions
The service conditions according to IEC 62271-1 for indoor switchgear are to be ensured.

The ambient air is not significantly polluted by dust, smoke, corrosive and / or flammable gases, vapors or salt.

The conditions of humidity are as follows:
- The average value of the relative humidity, measures over a period of 24 h, does not exceed 95%.
- The average value of the water vapor pressure, over a period of 24 h, does not exceed 2.2 kPa.
- The average value of the relative humidity, over a period of one month, does not exceed 90%.
- The average value of the water vapor pressure, over a period of one month, does not exceed 1.8 kPa.

Heaters are to be fitted in the low voltage compartments to preclude condensation phenomena (outside the gas-tight enclosures) resulting from major rapid temperature fluctuations and corresponding humidity.
The specified temperature conditions according to IEC 62271-1 (> -5 °C) are also to be ensured by means of room heating.

—
Fig. 11.2.1:
Example of a single row installation (Top view, dimensions in mm)

—
Fig. 11.2.2:
Example of a double row installation (Top view, dimensions in mm)

11.2. Space required

Planning of the space required for the switchgear must take account of the:

- Escape routes, hazardous area in case of pressure relief to the outside
- The possibility of inserting panels into an existing row
- The boundary conditions for IAC qualification, and
- Space required for dismantling and assembly of voltage transformers

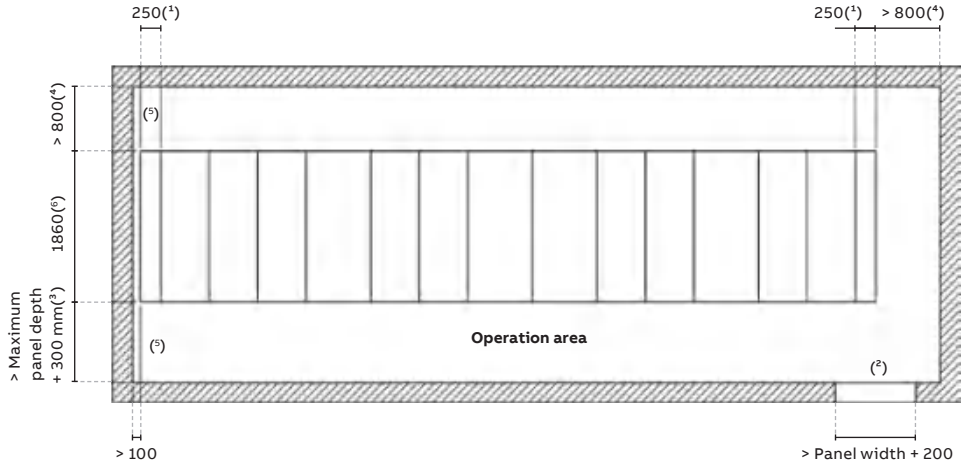

—
Fig. 11.2.1

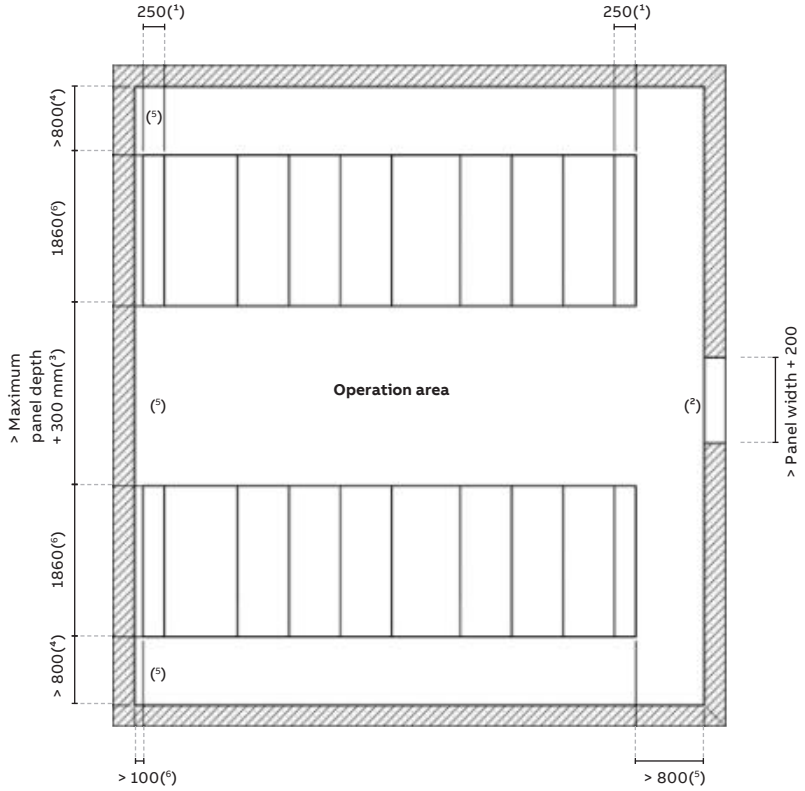

—
Fig. 11.2.2

1 . Lateral pressure relief duct.
2. Door height: > 2300 mm (with integrated measurement: > 2500 mm, with heat sinks mounted on a busbar compartment: 3200 mm).
3. Recommended dimension taking account of the insertion of panels into an existing row (can possibly be reduced as stated in section 11.3).
4. Recommended dimension; can be reduced under certain circumstances as stated in section 11.3.
5. Observe the notes on escape routes in section 11.3.
6. With heat sinks at the circuit-breaker compartment: 2210 mm.

11.3. Minimum aisle widths and emergency exits

The aisle width in front of the switchgear is to be planned with attention to the need to remove panels from or insert panels into existing rows, and to the requirements of the relevant standards (see IEC 61936 and IEC 62271-200). The minimum and recommended minimum aisle widths can be found in tables below.

"Aisles shall be at least 800 mm wide [...] Space for evacuation shall always be at least 500 mm, even when removable parts or open doors, which are blocked in the direction of escape, intrude into the escape routes [...] Exits shall be arranged so that the length of the escape route within the room...does not exceed [...] 20 m [...] If an operating aisle does not exceed 10 m, one exit is enough.
An exit or emergency possibilities shall be provided at both ends of the escape route if its length exceeds 10 m [...] The minimum height of an emergency door [possibly the 2nd door] shall be 2000 mm [clear height] and the minimum clear opening 750 mm."([1])

—

Table 11.3.1: Restrictive conditions on minimizing the aisle widths in front of the switchgear

		Minimum aisle width (Doors close in the direction of the escape route) [mm]	Recommended aisle width taking no account of removal or insertion of panels [mm]	Aisle width required for removal and insertion of panels [mm]
Single row installation	Panel block consisting exclusively of panels of 400 mm and / or 600 mm in width	> 800	> 1100	> maximum panel depth + 300
	Panel block with at least one panel of 800 mm or 840 mm in width	> 1000	> 1300	
		Minimum aisle width [mm]	**Recommended aisle width taking no account of removal or insertion of panels [mm]**	**Aisle width required for removal and insertion of panels [mm]**
Double row installation (with operator aisle between the system blocks)	Panel blocks consisting exclusively of panels of 400 mm and / or 600 mm in width	> 1400	> 1700	> maximum panel depth + 300
	Panel blocks with at least one panel of 800 mm or 840 mm in width	> 1800	> 2100	

1. IEC 61936, section 7.5.4

Installation and maintenance areas behind and to the sides of the switchgear

Table 11.3.2 shows the required distances to walls behind and to the side of the switchgear. Take notice of the downgrading of the internal arc classification if distances are minimized.

—

Table 11.3.2: IAC qualification on reduction of the wall distance behind the switchgear and the side wall distance

Wall distance behind the switchgear [mm]	Wall distance to the side of the switchgear (at one or both ends of the switchgear) [mm]	IAC qualification when a pressure relief duct discharging into the switchgear room is used	IAC qualification when a pressure relief duct discharging to the outside is used
> 800	> 800	AFLR	AFLR
> 600([1])	> 800	AFL	
> 800	> 500	AFR	
> 600([1])	> 500	AF	

11.4. Minimum room heights

—

Table 11.4.1: Minimum room heights ([2])

Pressure relief into the switchgear room along the switchgear	Pressure relief into the switchgear upward	Pressure relief to the outside	Integrated metering on at least one panel	Integrated metering with plug-in, isolatable voltage transformers on at least one panel	Integrated metering with plug-in, isolatable voltage sensors on at least one panel	High heat sink on at least one panel
[mm]	[mm]	[mm]	[mm]	[mm]	[mm]	[mm]
> 2800([3])	> 3500	> 3000		> 3500	> 3400	> 3200

1. Reducing to at least 500 mm on request
2. Measured from the lower edge of the cubicles (the height of special foundation frames placed on the concrete floor may have to be taken into account)
3. According to IEC 62271-200: IAC - qualification AFLR

—
Fig. 11.5.1: Dimensions of the hazardous area for pressure relief to the outside

11.5. Hazardous area for pressure relief to the outside

In the case of an internal arc fault, hot gases can suddenly emerge from the outlet of the pressure relief duct. The area around the outlet of a pressure relief duct for relief to the outside constitutes a hazardous area which must be fenced off by the switchgear operator to prevent persons from entering that area.

The size of the hazardous area depends on the level of the expected short-circuit current. Please consult fig. 11.5.1 and table 11.5.1 for the dimensions of the hazardous area.

—
Table 11.5.1: Dimensions of the hazardous area

Short-circuit current [kA]	A (distance to the side) [m]	R (distance to the front) [m]	H (distance to the top) [m]
20 / 25	1.0	2.0	2.0
31.5 / 40	1.5	2.5	2.5

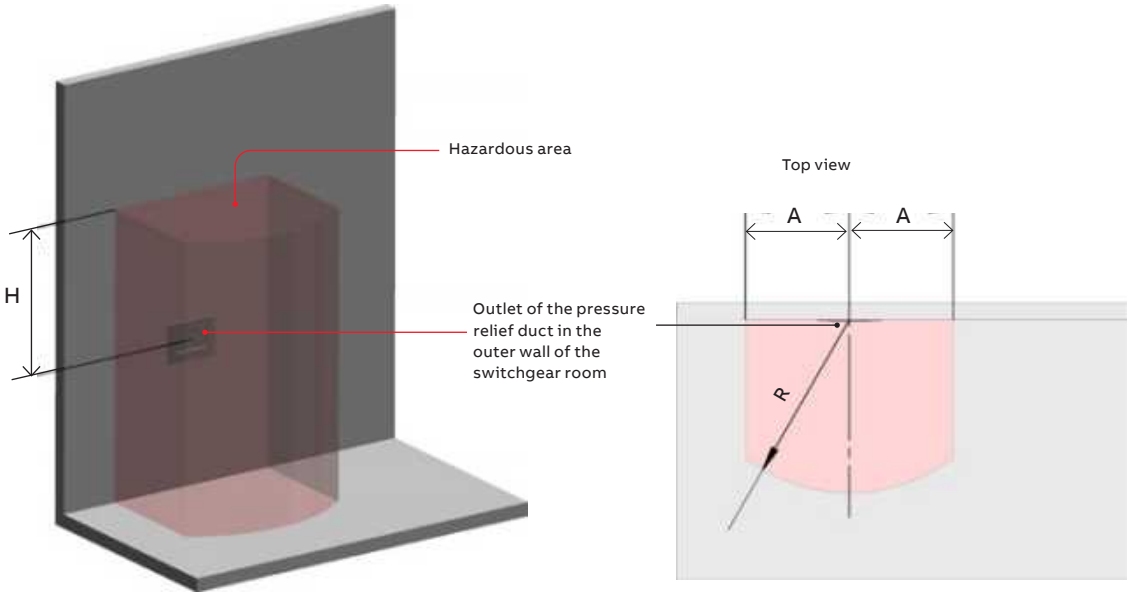

—
Fig. 11.5.1

—
Fig. 11.6.1:
Feeder Panel with block-type CT or sensor, panel width 600 mm

—
Fig. 11.6.2:
Feeder Panel with block-type CT or sensor, panel width 800 mm

—
Fig. 11.6.3:
Double feeder panel, panel width 2 x 400 mm

—
Fig. 11.6.4:
Feeder panel with CT or sensor, panel width 800 mm

11.6. Floor openings and cable axes

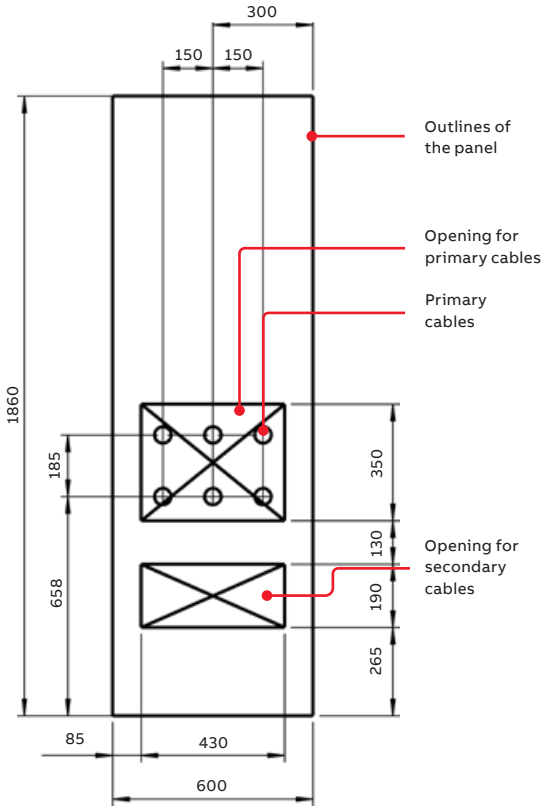

—
Fig. 11.6.1

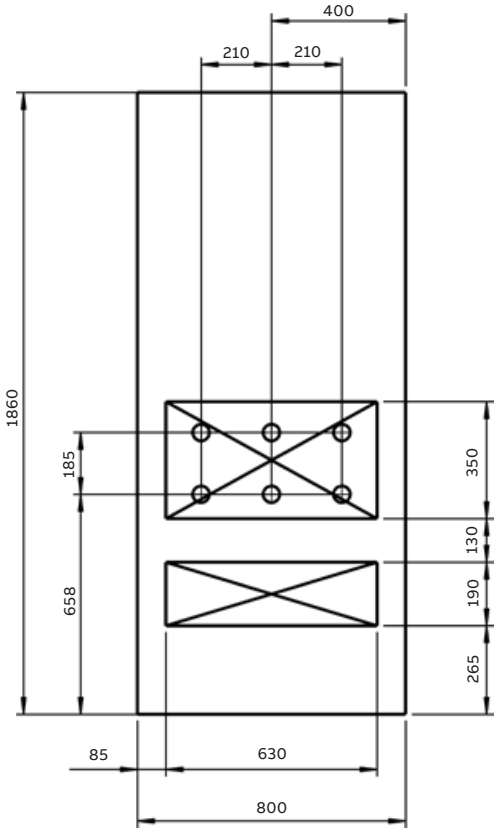

—
Fig. 11.6.2

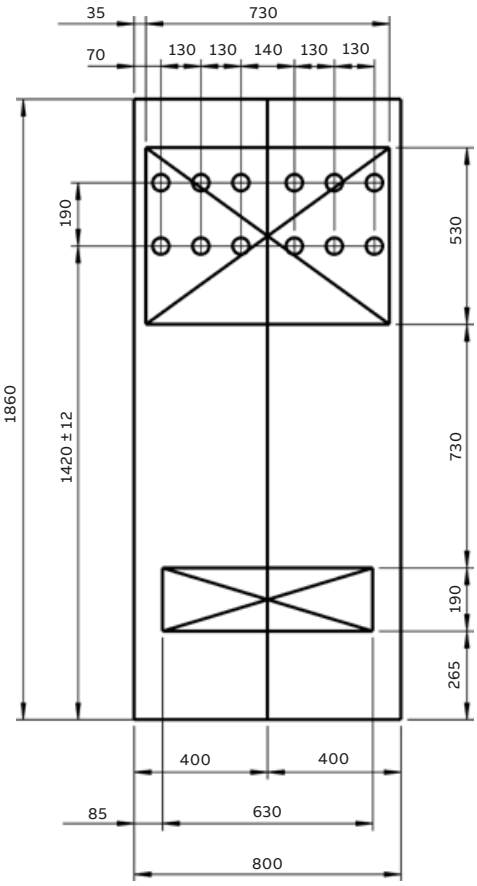

—
Fig. 11.6.3

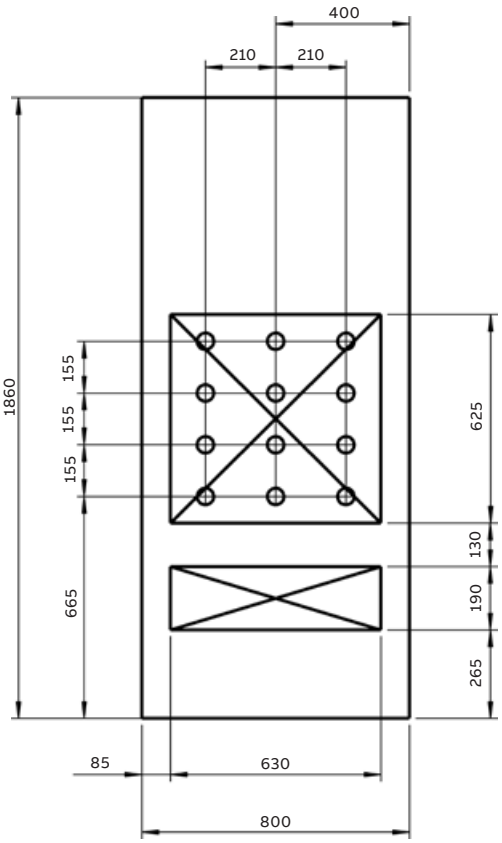

—
Fig. 11.6.4

—
Fig. 11.6.5:
Feeder panel, panel width 840 mm

—
Fig. 11.6.6:
Panel for capacitor switching ZX2-C

—
Fig. 11.6.7:
Panel with outer cone cable plug system, panel width 600 mm

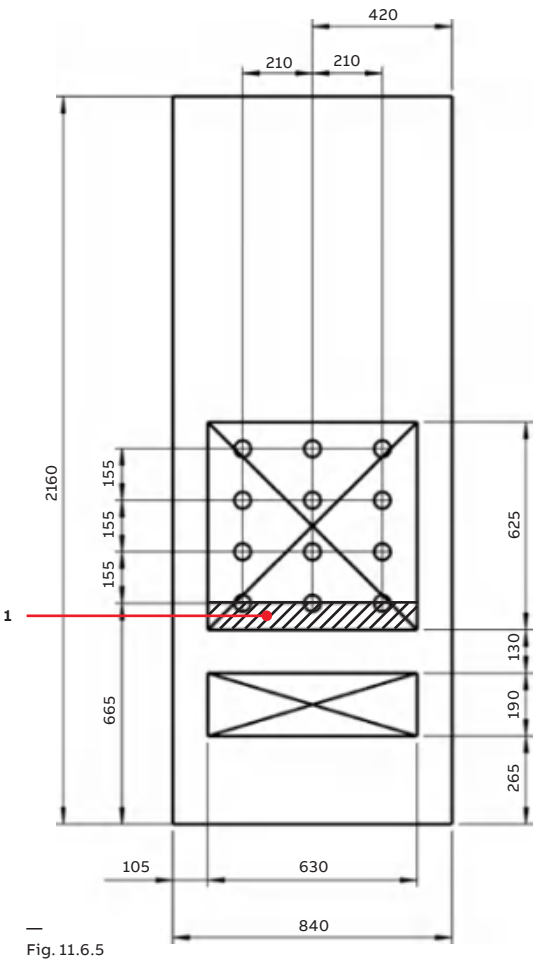

—
Fig. 11.6.5

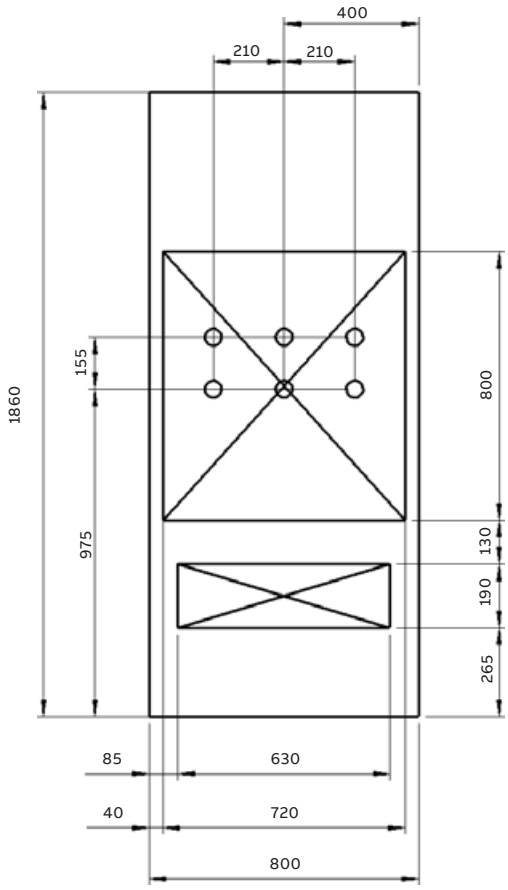

—
Fig. 11.6.6

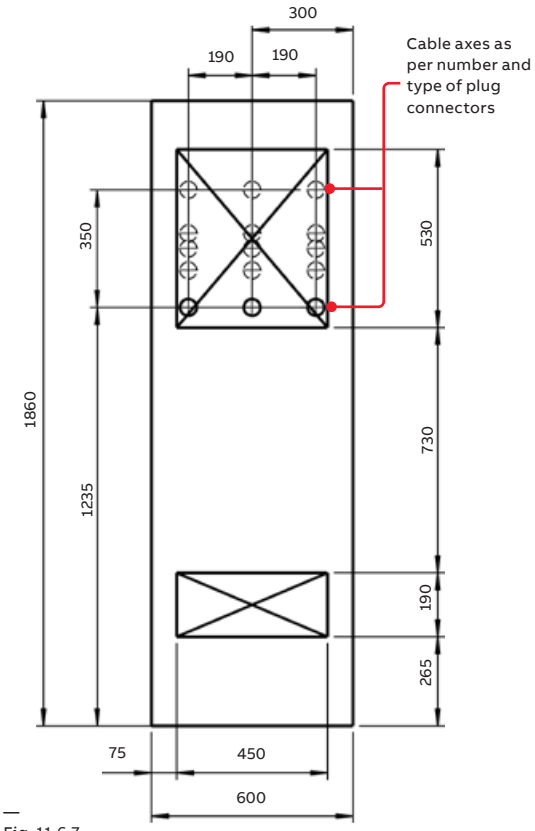

—
Fig. 11.6.7

1. In case of bore holes instead of rectangular floor openings a rectangular opening in the marked area is necessary for ventilation.

—
Fig. 11.6.8:
Panel with outer cone cable plug system, panel width 800 mm

—
Fig. 11.6.9:
Panel with outer cone cable plug system, panel width 840 mm

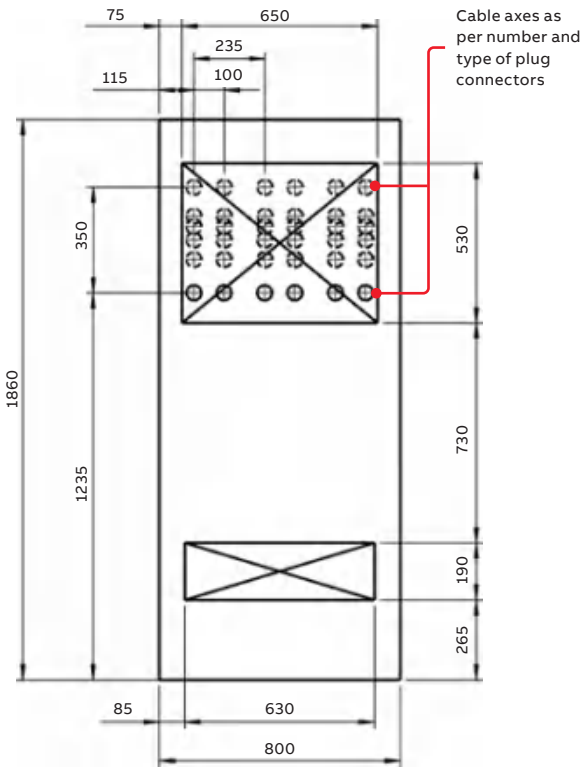

—
Fig. 11.6.8

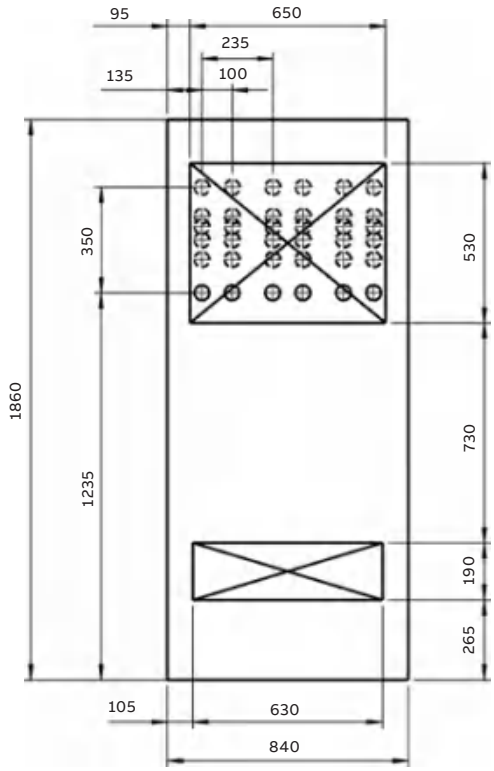

—
Fig. 11.6.9

For the following panels, only the openings for secondary cables in the concrete floor are required:

- Sectionaliser and riser panels([1])
- Bus coupler([1])
- Sectionaliser panels without circuit breaker
- Metering panels (not integrated metering)

1. Within a switchgear block

—
Fig. 11.7.1:
Foundation frame and outlines of the panel, panel width 800 mm

—
Fig. 11.7.2:
Foundation frame for the panel width 800 mm

11.7. Foundation frames

The optional foundation frames consist of aluminum sections. They are supplied pre-assembled for one panel each. Foundation frames of 600 mm, 800 mm or 840 mm in width are used, depending on the panel width. 800 mm wide frames are available for double feeder panels of 400 mm width.

The foundation frames are fastened to the concrete floor and embedded in the floor topping. When installing the foundation frame at site, observe the form and position tolerances stated in the order documents.

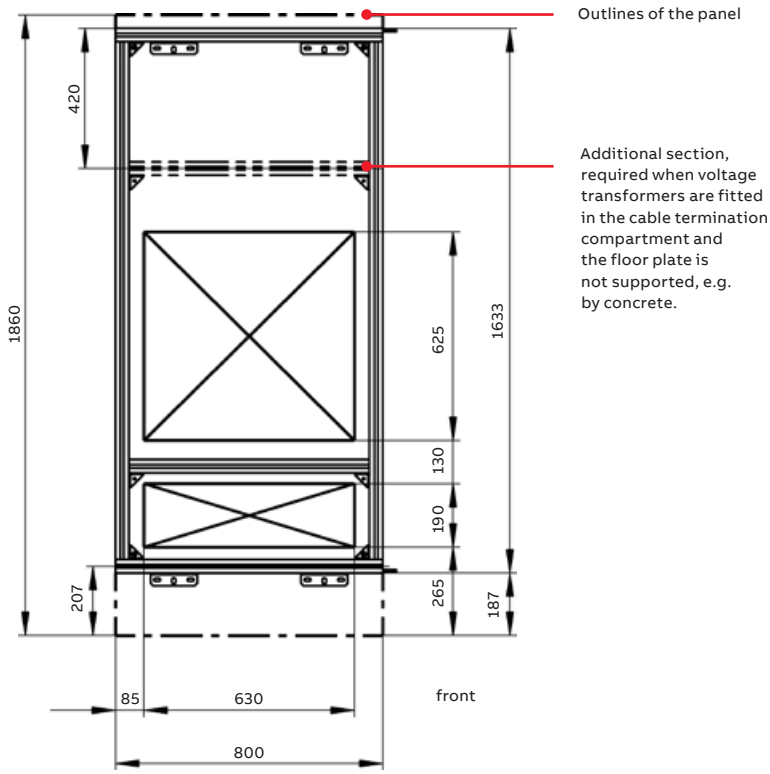

—
Fig. 11.7.1

—
Fig. 11.7.2

—
Fig. 11.8.1:
Example of a false floor in the area of a five-panel ZX2 switchgear system as an aid to planning (plan view, dimensions in mm).

11.8. False floor

Fig. 11.8.1 is an aid to planning of the false floor.

The floor plates of the panels have L13 x 14 slots for fastening the panels to the frame sections. Provide M 8 threads or bore holes for screws M 8 in the frame sections at the positions of the slots.

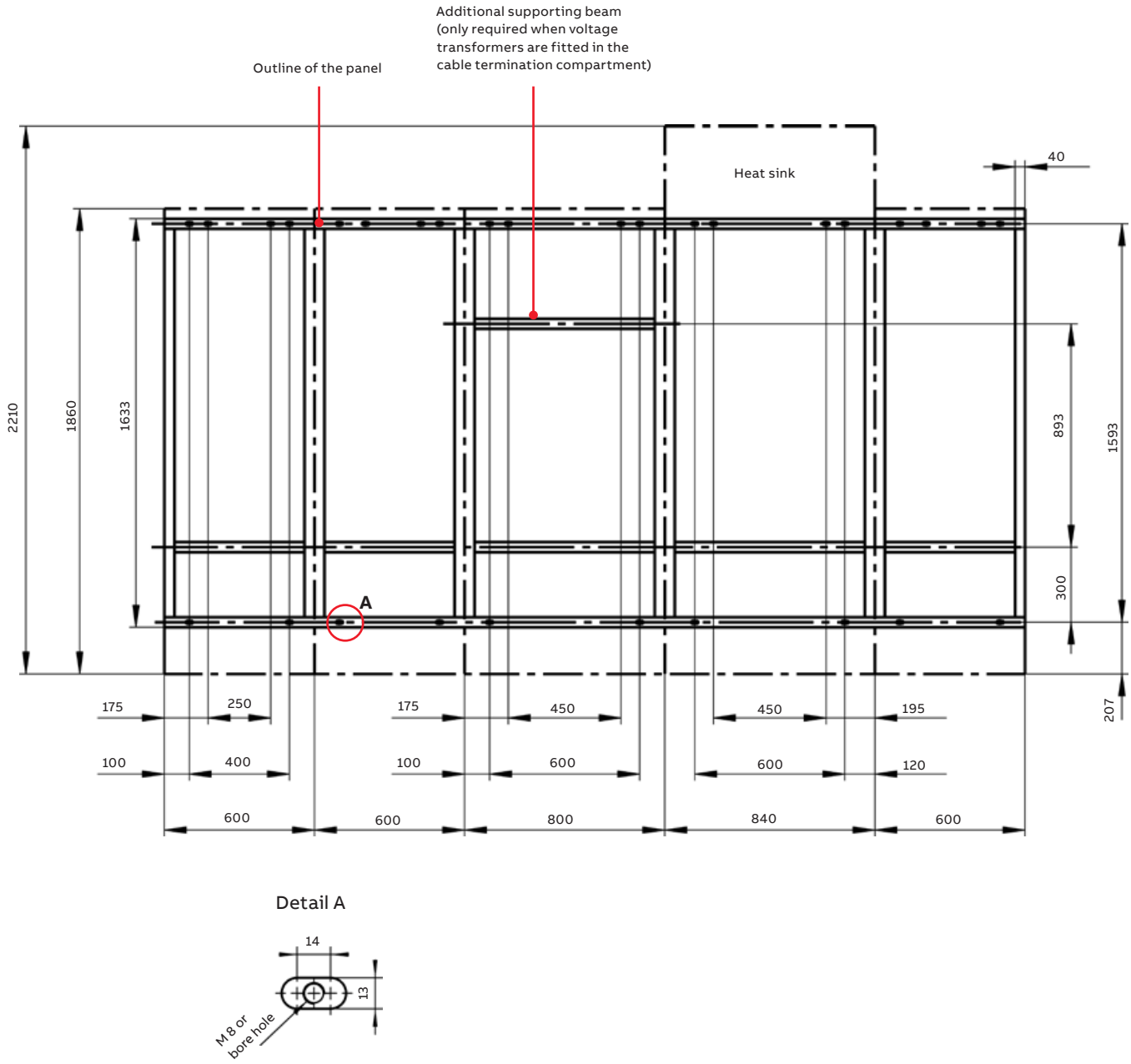

—
Fig. 11.8.1

- L13 x 14 slot in the floor plate of the panel
- M 8 thread or bore hole for screw M 8 in the frame section of the false floor

11.9. Earthing of the switchgear

11.9.1. Design of earthing systems with regard to touch voltage and thermal stress

The earthing system for the station building and the earthing system for the switchgear are to be designed in accordance with IEC 61936.

The switchgear system is to be fitted with a continuous copper earthing bar with a cross-section of 400 mm^2 (ECuF30, 40 mm × 10 mm) (In double feeder panels the cross section is 30 mm x 8 mm). The connection of this earthing bar to the station earthing system is to be effected in accordance with the above standards.

11.9.2. EMC-compliant earthing of the switchgear

Observe IEC 61000-5-2 and IEC 61000-6-5 to project the earthing system of the station building and the design, laying and connection of external control cables.

Establish the switchgear earthing due to the guidelines in the following section.

11.9.3. Recommendations on configuration of the switchgear earthing

We recommend that the switchgear be earthed as shown in figs. 11.9.3.1 and 11.9.3.2. A ring consisting of 80 mm x 5 mm copper strip is to be located beneath the switchgear and connected at several points with a maximum spacing of 5 m to the earthing system of the building.

The foundation frame, the main earthing bar in the panels and the earthing bar in the low voltage compartments are to be connected at multiple points to the ring located beneath the switchgear. Details on the use of materials and the number of connections can be found in fig. 11.9.3.1 and 11.9.3.2. When planning the switchgear earthing, please observe the notes in sections 11.9.1 and 11.9.2.

—
Fig. 11.9.3.1: Earthing recommendation, shown schematically as a sectional elevation of the lower part of a panel including the concrete floor

—
Fig. 11.9.3.2: Earthing recommendation, plan view (section A-A of fig. 12.9.3.1)

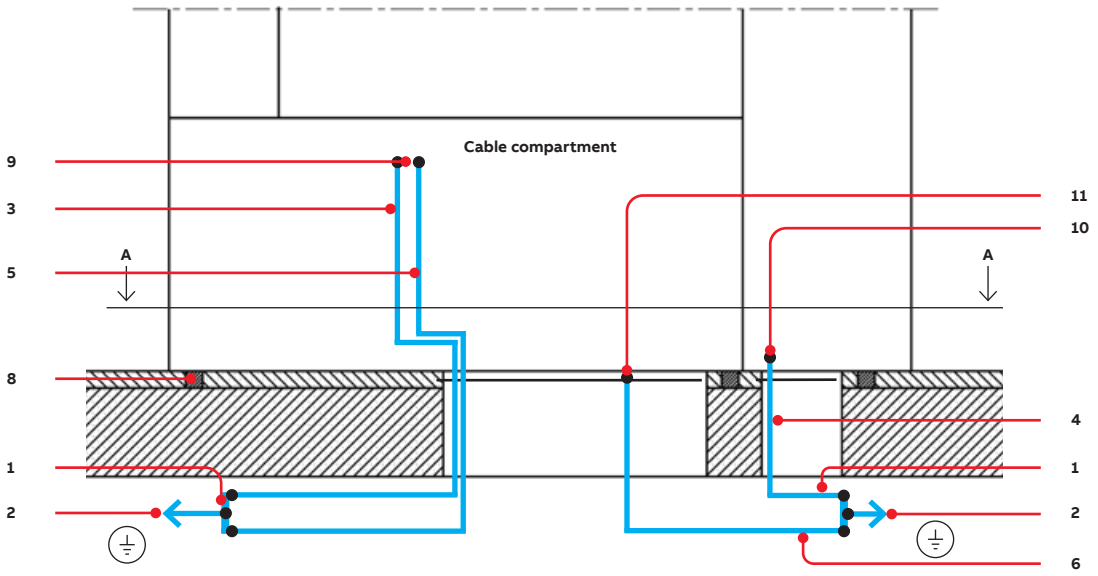

—
Fig. 11.9.3.1

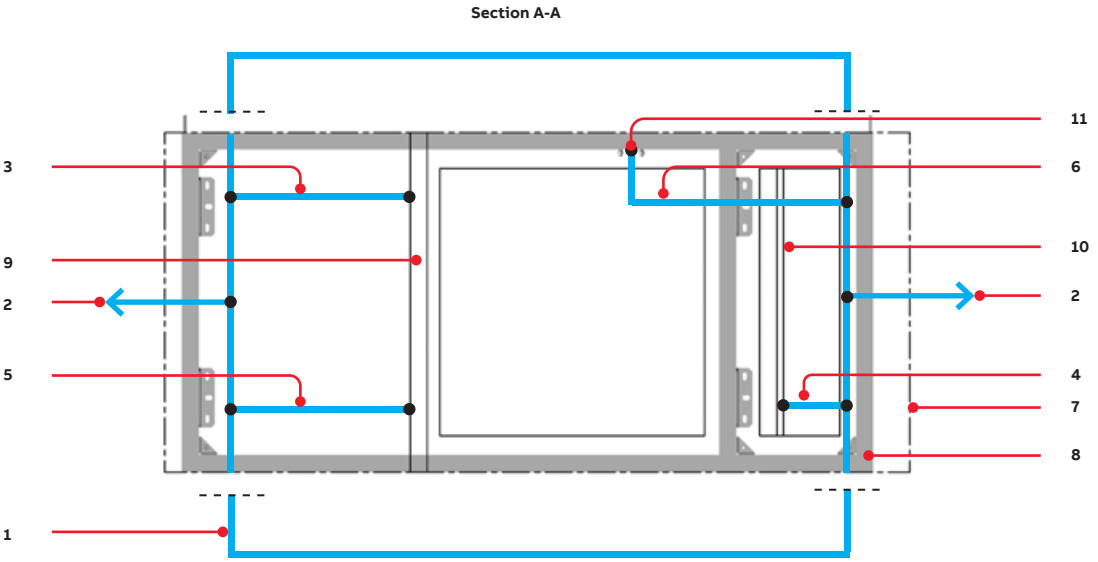

—
Fig. 11.9.3.2

1. Ring below the switchgear, material ECuF30, cross-section 80 mm x 5 mm
2. Several connections from (1) to the building earth at distances of max. 5 m, material ECuF30, cross-section 80 mm x 5 mm
3. Short-circuit proof earthing of the switchgear in both end panels and at least every third panel, material: ECuF30, cross-section: 40 mm x 10 mm
4. Low impedance earthing of the earthing bar in the low voltage compartment of each panel, material: tinned copper braid, cross-section: 20 mm x 3 mm
5. Low impedance earthing of the switchgear in each panel, material: tinned copper braid, cross-section: 20 mm x 3 mm
6. Earthing of the foundation frame, at least every third foundation frame,material: galvanized steel strip, cross-section: 30 mm x 3.5 mm
7. Outline of the panel
8. Foundation frame
9. Main earthing bar
10. Earthing bar in the low voltage compartment
11. Earthing point on the foundation frame

—
Legend to figs. 11.9.3.1 and 11.9.3.2

11.10. Panel weights

—

Table 11.10.1: Panel weights

Panel type	Panel width [mm]	Weight, max. [kg]
Single busbar	2 x 400	1500
	600	1400
	800 / 840	2000
Double busbar	2 x 400	1800
	600	1600
	800 / 840	2400
Side pressure relief duct (increase in weight of the relevant end panel)		250

12. Non-standard operating conditions

—
Fig. 12.1: Relationship between ambient air temperature and current carrying capacity

Non-standard operating conditions may require special action. A number of non-standard requirements and the measures which may be necessary are listed below. Over and above this, our design team will be pleased to make a technical proposal to meet your specific requirements.

Rated frequency 60 Hz, site altitudes up to 1000 m for SF_6 insulated panels
In principle, at an operating frequency of 60 Hz, a reduction factor of 0.95 is to be applied to the permissible current to determine a thermal equivalent to a 50 Hz load current. In individual cases, an evaluation of the type test can indicate that a reduction is not or only partially required.

Seismic withstand capability
Panels are tested to IEEE Std. 693 Draft 6; 1997.([1])

Climate
With high humidity and / or major rapid temperature fluctuations, electrical heaters must be fitted in the low voltage compartments.

Site altitudes > 1000 m above sea level for SF_6 insulated panels
The panels are suitable for site altitudes > 1000 m above sea level with the following exceptions.

- All panels with test voltages > 70 / 170kV
- Double panels with test voltages > 28 / 75kV
- Outer cone panels with voltage transformer isolating device and test voltages > 50 / 125kV
- C-panels with a load current > 800 A
- C-panels with an ambient temperature > 30 °C

At site altitudes > 1000 m, a reduction of the permissible operating current and / or the ambient temperature may be necessary. An individual examination can be made on request.

The non-standard operating conditions include in particular
- Higher ambient air temperature (maximum > 40 °C and maximum 24 h average > 35 °C) see fig. 12.1
- Ambient air contaminated by dust, smoke, corrosive or flammable gases or salt

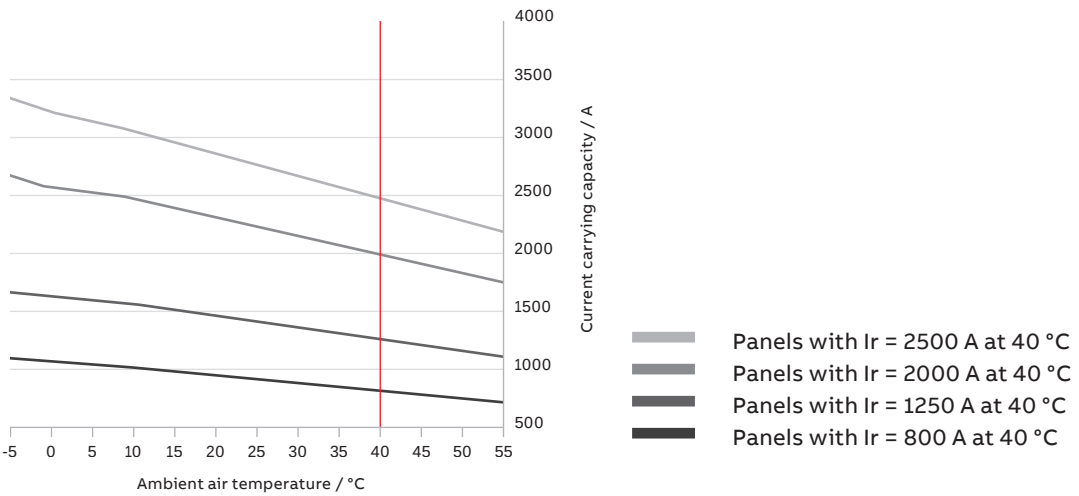

—
Fig. 12.1

1. Addition measures required (on request)

—
Notes

Additional information
We reserve the right to make technical changes or modify the contents of this document without prior notice. With regard to purchase orders, the agreed particulars shall prevail. ABB AG does not accept any responsibility whatsoever for potential errors or possible lack of information in this document.

We reserve all rights in this document and in the subject matter and illustrations contained therein. Any reproduction, disclosure to third parties or utilization of its contents – in whole or in parts – is forbidden without prior written consent of ABB AG.

—
ABB AG
Oberhausener Str. 33
D-40472 Ratingen
Germany

abb.com/medium-voltage

© Copyright 2020 ABB. All rights reserved.
Specifications subject to change without notice.

1VBA680502P0102 REV 22 - September 2020