CATALOG

SACE TMAX FOR SPECIAL APPLICATIONS

Adaptability, versatility and complete freedom

- High breaking capacity in compact dimensions
- Maximum flexibility
- Advanced protection

ENGINEERED TO OUTRUN

The SACE Tmax range of molded case circuit-breakers and switch-disconnectors for special applications offers increasingly comprehensive, leading-edge solutions that anticipate market trends.
World market leader in this area, SACE Tmax range is a complete series of products according to UL and IEC Standards to protect and isolate electrical systems, starting from 1000V DC or 800V AC.

Table of contents

01. Main characteristics

02. List of range with references to the pages of technical information

03. SACE Tmax PV and Tmax T for applications from 1000 to 1500V DC

04. SACE Tmax T for applications from 800V AC to 1150V AC

05. Protection trip units

06. Accessories

07. Installation

08. Overall dimensions

09. Wiring diagrams

10. Ordering codes

01

MAIN CHARACTERISTICS

1/2 **Product conformity**

1/2 Compliance with Standards

1/3 Company Quality System

1/3 Environmental Health & Safety Management System,Social Responsibility and Ethics

1/3 Product Material Compliance

1/4 **Construction characteristics**

1/4 Double insulation

1/4 Positive operation

1/5 Insulation behavior

1/5 Tropicalization

PRODUCTS CONFORMITY

Compliance with standards

SACE Tmax T circuit-breakers and their accessories comply with following international Standards

Compliance with Standards
Tmax circuit-breakers and their accessories are constructed in compliance with:

- Standard:
  - IEC 60947-2;
  - IEC 60947-3;
  - UL 489B.
- Directives:
  - EC “Low Voltage Directive” (LVD) N° 2014/35/EC;
  - EC “Electromagnetic Compatibility Directive” (EMC) 2014/30/EC.

Certification of conformity with product Standards is carried out at the ABB SACE test laboratory (accredited by ACCREDIA - certificate no. 0062L-D2/2020) in compliance with UNI CEI EN IS0/IEC 17025 European Standard, by the Italian certification body ACAE, member of the European LOVAG organization and by the Swedish certification body SEMKO recognized by the international IECEE organization.

For more information about circuit-breakers, certified ratings and their corresponding validity, please contact ABB SACE.

Company Quality System
The ABB SACE Quality System complies with the following Standards:
- ISO 9001 International Standard;
- EN ISO 9001 (equivalent) European Standards;
- UNI EN ISO 9001 (equivalent) Italian Standards;
- IRIS International Railway Industry Standards.

The ABB SACE Quality System attained its first certification by the RINA certification body in 1990.

Environmental Health & Safety Management System, Social Responsibility and Ethics
Special care for the environment is a priority commitment for ABB SACE. This is confirmed through the company's Environmental Management System which is certified by the RINA (ABB SACE was the first industry in the electromechanical sector in Italy to obtain this recognition) in conformity with the International ISO14001 Standard. In 1999 the Environmental Management System was integrated with the Occupational Health and Safety Management System according to the OHSAS 18001 Standard and later, in 2005, with the SA 8000 (Social Accountability 8000) Standard. All this amounts to solid evidence of ABB's commitment to re-specting business ethics and promoting a safe and healthy working environment. ISO 14001, OHSAS 18001 and SA8000 recognitions together with ISO 9001 made it possible to obtain RINA BEST 4 (Business Excellence Sustainable Task) certification.
In addition to this, the following markings and certifications have been achieved:
- GISA 01.02A03;
- LCA (Life Cycle Assessment).

Product Material Compliance
The Tmax T family complies with the following international regulations:
- RoHS II, Directive 2011/65/EU and Amendment 2015/863 - Restriction of Hazardous Substances;
- REACH, 2006/1907/EC, Registration, Evaluation, Authorization and Restriction of Chemicals;
- WEEE 2012/19/EU -Waste Electrical & Electronic Equipment;
- Conflict Minerals - Dodd-Frank Consumer Protection Act. Section 1502.

CONSTRUCTION CHARACTERISTICS

All the SACE Tmax molded case circuit-breakers are built in accordance with the following constructional characteristics.

Double insulation

The Tmax circuit-breaker has double insulation between the live power parts (excluding the terminals) and the front parts of the apparatus where the operator works during normal opera-tion. The seat of each electrical accessory is com-pletely segregated from the power circuit, pre-venting any risk of contact with live parts. The operating mechanism especially is completely insulated from the powered circuits. Furthermore, the circuit-breaker has oversized insulation, both between the live internal parts and near the connection terminals. Furthermore, the distances exceed those required by the IEC Standards and fully comply with the prescriptions of the UL 489 Standard.

Positive operation

The operating lever always indicates the precise position of the moving contacts of the circuit-breaker, thereby guaranteeing safe and reliable signals, in compliance with IEC 60073 and IEC 60417-2 Standards (I = Closed; O = Open; yellow-green line = open due to protection trip). The circuit-breaker operating mechanism has a free release regardless of the pressure on the lever and the speed of operation. Protection tripping automatically opens the moving contacts: to close them again, the operating mechanism must first be reset by pushing the operating lever from the intermediate position to the lowest open position.

Insulation behavior
In the open position, the circuit-breaker guarantees insulation distances in compliance with the IEC 60947-2 Standard, thus preventing leakage currents to flow between the input and output terminals.

Tropicalization
Circuit-breakers and accessories in the Tmax T series are tested in compliance with the IEC 60068-2-30 Standard, carrying out 2 cycles at 55°C with the "variant 1" method (clause 7.3.3). The suitability of the Tmax T series under the most severe environmental conditions is further ensured thanks to:

- molded insulating cases made of synthetic resins reinforced with glass fibers;
- anti-corrosion treatment of the main metallic parts;
- Fe/Zn 12 zinc-plating (ISO 2081) protected by a conversion layer, free from hexavalent chromium (ROHS-compliant), with the same corrosion re-sistance guaranteed by ISO 4520 class 2C;
- application of anti-condensation protection for electronic overcurrent releases and relative accessories.

02

LIST OF RANGE WITH REFERENCES TO THE PAGES OF TECHNICAL INFORMATION

2/2 **List of range with references to the pages of technical information**

LIST OF RANGE WITH REFERENCES TO THE PAGES OF TECHNICAL INFORMATION

	Circuit Breakers				
				Page	
	Voltage		**Range**	**Technical information**	**Connection diagrams**
IEC	DC	up to 1000 VDC	Tmax T	3/3	9/2
		up to 1500 VDC	Tmax PV-E	3/3	9/4
	AC	up to 800 VAC	Tmax T -HA	4/2	
			Tmax XT5X-HVA8 (1)	4/3	
		up to 1000 VAC	Tmax T	4/3	
		up to 1150 VAC	Tmax T	4/4	
UL	DC	up to 1000 VDC	Tmax PV	3/6	9/5
	AC	up to 800 VAC	Tmax T -HA	4/5	

1) Complete information about Tmax XT5X -HVA8 are available in the document 1SDC210350B0201

SACE Tmax XT5 -HVA8
Molded Case Circuit Breakers for
IEC Applications up to 800VAC

	Switch Disconnectors				
				Page	
	Voltage		**Range**	**Technical information**	**Connection diagrams**
IEC	DC	up to 1100 VDC	Tmax PV	3/4	9/2
		up to 1500 VDC	Tmax PV-E	3/4	9/4
	AC	up to 1150 VAC	Tmax T	4/4	
UL	DC	up to 1000 VDC	Tmax PV	3/7	9/5
		up to 1500 VDC	Tmax PV-E	3/7	9/3

03

SACE TMAX PV AND TMAX T FOR APPLICATIONS FROM 1000 TO 1500V DC

3/2 **Flexibility guaranteed for new IEC compliant requirements**

3/3 **Ranges**

3/3 Molded case circuit-breakers up to 1500V DC in compliance with IEC 60947-2

3/4 Molded case switch-disconnectors up to 1100V DC in compliance with IEC 60947-3

3/4 Molded case switch-disconnectors up to 1500V DC in compliance with IEC 60947-3

3/5 **Dedicated solutions compliant with UL Standards**

3/6 **Ranges**

3/6 Molded case circuit-breakers up to 1000V DC in compliance with UL 489B

3/6 Molded case circuit-breakers up to 1500V DC in compliance with UL 489B

3/7 Molded case switch-disconnectors up to 1000V DC in compliance with UL 489B

3/7 Molded case switch-disconnectors up to 1500V DC in compliance with UL 489B

3/8 **Connection in series with Jumpers kits**

FLEXIBILITY GUARANTEED FOR NEW IEC COMPLIANT REQUIREMENTS

In accordance with IEC 60947-3 and IEC 60947-2 specifications, the SACE Tmax T and SACE Tmax PV ranges propose molded-case circuit-breakers and switch-disconnectors for standard 1000V DC applications as well as a versatile choice of extended ratings up to 1500V DC for today's increasingly demanding DC applications. Connection jumpers are available for enhanced safety and ease of installation.

In order to operate and protect plant up to 1500VDC according to IEC standard, ABB developed the SACE Tmax T and Tmax PV ranges.
SACE Tmax T, available for installations up to 1000VDC, is a range composed by automatic circuit breakers that grant protection up to rating 800A and short-circuit currents up to 50kA.
SACE Tmax PV is the range for application up to 1500VDC and it is composed by a complete set of switch disconnectors up to 1600A plus an automatic circuit breaker, the T4N/PV-E, able to interrupt short-circuit currents up to 25 kA in accordance with standard IEC 60947-2 edition 5.0 Annex P, and up to 10 kA in accordance with standard IEC60947-2 edition 4.2 and GB14048.2.

Thanks to dedicated jumpers kits, available as accessories, it is really fast and easy to connect a single polarity source with 4 poles in series or, alternatively, to a dual polarity source with 2 poles in series on the positive supply and two on the negative supply. Use of jumpers kit, that in some case is mandatory, assures the right insulation and also the heat dissipation when the working conditions need it thanks to incorporated heat sink.
Moreover it is possible to accessorize these products with a vast assortment of electrical and mechanical accessories, that are in common between SACE Tmax T and Tmax PV.

Ranges

Molded case circuit-breakers up to 1500V DC in compliance with IEC 60947-2

Whenever a consistent short-circuit current can be found, 1000V and 1500V DC automatic circuit-breakers are available in the Tmax T and Tmax PV range.

			For use at 1000VDC			For use at 1000VDC with jumpers for connection of poles			For use at 1500VDC
			Tmax T4V	**Tmax T5V**	**Tmax T6L**	**Tmax T4V**	**Tmax T5V**	**Tmax T6L**	**T4N/PV-E**
Rated uninterrupted current		[A]	250	400/630	630/800	80..250	400/630	630/800	100..250
Poles			4	4	4	4	4	4	4
Rated service voltage, Ue		[VDC]	1000	1000	1000	1000	1000	1000	1500
Rated impulse withstand voltage, Uimp		[kV]	8	8	8	8	8	8	8
Rated insulation voltage, Ui		[V]	1150	1150	1150	1150	1150	1150	1500
Rated ultimate short-circuit breaking capacity, Icu									
Icu @ 1000V (DC) 2 poles + 2 poles in series (1)		[kA]	-	-	-	20	20	20	
Icu @ 1000V (DC) 4 poles in series (1)		[kA]	40 (2)	40 (2)	50 (2)	-	-	-	
Icu @ 1500V (DC) (1)		[kA]	-	-	-	-	-	-	25 (τ = 1 ms) (6) 10 (τ = 5 ms) (7)
Rated service short-circuit breaking capacity in DC, Ics									
Ics @ 1000V (DC) 2 poles + 2 poles in series (1)		[kA]	-	-	-	10	10	10	
Ics @ 1000V (DC) 4 poles in series (1)		[kA]	20 (2)	10 (2)	12,5 (2)	-	-	-	
Ics @ 1500V (DC) (1)		[kA]	-	-	-	-	-	-	20 (τ = 1 ms) (6) 7.5 (τ = 5 ms) (7)
Category of use (IEC 60947-2)			A	B (400 A) (3) A (630 A)	B (4)	A	B (400 A) A (630 A)	B	A
Behaviour on isolation			●	●	●	●	●	●	●
Reference Standards			IEC 60947-2	IEC 60947-2	IEC 60947-2	IEC 60947-2	IEC 60947-2	IEC 60947-2	IEC 60947-2
Thermomagnetic releases	TMD		●	-	-	●	-	-	-
	TMA		●	●	●	●	●	●	-
	TMF		-	-	-	-	-	-	●
Terminals			FC Cu	FC Cu	F - FC CuAl - R	F	F	F	FC Cu - FC CuAl
Connection with jumpers			-	-	-	● (8)	● (8)	● (8)	● (8)
Version			F	F	F(5)	F	F	F	F
Mechanical life		[No. operations]	20000	20000	20000	7500	7500	7500	7500
Electrical life		[No. operations]	1000 (9)	1000 (9)	1000 (9)	1000 (9)	1000 (9)	1000 (9)	1000 (9)
Dimensions	4 poles	W [mm/in]	140/5.52	184/7.24	280/11,02	140/5.52	184/7.24	280/11,02	140/5.52
		D [mm/in]	103.5/4.07	103.5/4.07	103.5/4.07	103.5/4.07	103.5/4.07	103.5/4.07	103.5/4.07
		H [mm/in]	205/8.07	205/8.07	268/10.55	205/8.07	205/8.07	268/10.55	205/8.07
Weight (with standard terminals)	Fixed	[kg/lbs]	3.05/6.72	4.15/9.15	12/26.46	3.05/6.72	4.15/9.15	12/26.46	3.05/6.72

(1) See the wiring diagrams on page 9/2
(2) Power supply only from above
(3) Icw = 5 kA
(4) Icw = 7,6 kA (630 A) - 10 kA (800 A)
(5) For Tmax T6 in withdrawable version please ask ABB SACE
(6) According to IEC 60947-2 Edition 5.0 Annex P
(7) According to IEC 60947-2 Edition 4.2 and GB 14048.2
(8) Selection of one of the jumper connection options is mandatory. Jumpers KITs to be ordered separately (not supplied with CB).
(9) Opening with SOR or UVR

Ranges

Molded case switch-disconnectors up to 1100V DC in compliance with IEC 60947-3

ELECTRICAL CHARACHTERISTICS

Tmax PV switch-disconnectors in compliance with the IEC60947-3		T4D/PV	T5D/PV	T6D/PV	T7D/PV (1)
Rated service current in category DC22 B, Ie	(A)	250	500	800	1250-1600
Number of poles	(No.)	4	4	4	4
Rated service voltage, Ue		1100V DC	1100V DC	1100V DC	1100V DC
Rated impulse withstand voltage, Uimp	(kV)	8	8	8	8
Rated insulation voltage, Ui	(V)	1150V DC	1150V DC	1150V DC	1150V DC
Test voltage at industrial frequency for 1 minute	(V)	3500	3500	3500	3500
Rated short-circuit making capacity, switch-disconnector only, Icm	(kA)	3	6	9.6	19.2
Rated short-time withstand current for 1s, Icw	(kA)	3	6	9.6	19.2
Versions		F	F	F	F
Standard terminals		F	F	F	F
Mechanical life	(No. Operations)	7500	7500	7500	20000
Electrical life (operations @ 1100V DC)	(No. Operations)	500 (2)	500 (2)	500 (2)	500 (2)
Basic dimensions	W (mm/in)	140/5.52	186/7.33	280/11.02	280/11.02
	D (mm/in)	103.5/4.07	103.5/4.07	103.5/4.07	154/6.06 (manual) 178/7.01 (motorized)
	H (mm/in)	205/8.07	205/8.07	268/10.55	268/10.55
Weight (with standard terminals only)	(kg/lbs)	3.05/6.72	4.15/9.15	12/26.46	12.5/27.56 (manual) 14/30.86 (motorized)

(1) installation in vertical position only;
(2) openings with SOR or UVR

Molded case switch-disconnectors up to 1500V DC in compliance with IEC 60947-3

ELECTRICAL CHARACHTERISTICS

Tmax PV switch-disconnectors in compliance with the IEC60947-3		T4D/PV-E	T5D/PV-E	T7D/PV-E (1)
Rated service current in category DC22 A, Ie	(A)	250	500	1250-1600
Number of poles	(No.)	4	4	4
Rated service voltage, Ue		1500V DC	1500V DC	1500V DC
Rated impulse withstand voltage, Uimp	(kV)	8	8	8
Rated insulation voltage, Ui	(V)	1500V DC	1500V DC	1500V DC
Rated short-circuit making capacity, switch-disconnector only, Icm	(kA)	3	6	19.2
Rated short-time withstand current for 1s, Icw	(kA)	3	6	19.2
Versions		F	F	F
Standard terminals		F	F	F
Mechanical life	(No. Operations)	7500	7500	20000
Electrical life (operations @ 1500V DC)	(No. Operations)	1000 (2)	1000 (2)	500 (2)
Basic dimensions	W (mm/in)	140/5.52	186/7.33	280/11.02
	D (mm/in)	103.5/4.07	103.5/4.07	178/7.01
	H (mm/in)	205/8,07	205/8.07	268/10.55
Weight (with standard terminals only)	(kg/lbs)	3.05/6.72	3,15/9.15	14/30.86

(1) installation in vertical position only. Motorized version;
(2) openings with SOR or UVR

DEDICATED SOLUTIONS COMPLIANT WITH UL STANDARDS

The SACE Tmax PV UL range includes a full assortment of molded-case circuit-breakers and switch-disconnectors according to UL 489B standards. Multiple versions that form a uniform product range and a complete portfolio of shared accessories, including the connection jumpers that are mandatory for SACE Tmax PV UL. The jumpers ensure ease of installation, safety and are fully compliant with UL regulations.

The SACE Tmax PV range of molded-case circuit-breakers and switch-disconnectors for photovoltaic applications now includes a UL489B type-approved version designed for 1500V DC installations with rated current up to 1200A. Compact and versatile, these UL circuit-breakers and switch-disconnectors are the best DC solution for the panels and inverters in all PV systems and in all markets where the North American regulations apply. A development of the switch-disconnector platform with T7N-D/PV-E integrated motor, the UL type-approved version provides optimized isolating performance over the entire current range.

Available in the 4-pole configuration, T7N-D/PV-E switch-disconnectors according to UL standards include versions with an integrated motor-operator which do not require external components. This cuts down on overall size, reduces the amount of wiring and the installation time, all to the benefit of the final cost of the installation.
All products can be equipped with the most common UL listed mechanical and electrical accessories already available for the **SACE Tmax T UL** molded-case circuit-breaker range.

Ranges

MOLDED CASE CIRCUIT-BREAKERS UP TO 1000V DC

			T4N/PV	T5N/PV	T6N/PV
Frame size		[A]	200	400	600-800
Rated service current		[A]	40-200	225-400	600-800
Poles			3	3	4
Standard			UL489B	UL489B	UL489B
Product certification			UL489B	UL489B	UL489B
Rated service voltage		[VDC]	1000	1000	1000
Rated insulation voltage		[VDC]	1150	1150	1150
Short-circuit interrupting rating		[kA]	7.5	5	10
Thermomagnetic releases			TMD-TMA	TMF-TMA	TMA
Electronic trip unit			-	-	-
Version			F	F	F
Connections (1)			Jumpers	Jumpers	Jumpers
Standard terminals			F	F	F
Terminals provided with Jumper kit (see ordering codes for details)			FCCuAl	FCCuAl-FCCu-ES	FCCuAl-EF
Mechanical life		[No. operations]	7500	7500	7500
Electrical life		[No. operations]	1000 (2)	500 (2)	500 (2)
Dimensions		W [mm/in]	105/4.13	140/5.52	280/11.02
		D [mm/in]	103.5/4.07	103.5/4.07	103.5/4.07
		H [mm/in]	205/8.07	205/8.07	268/10.55
Weight (with standard terminals)	Fixed	[kg/lbs]	2.35/5.18	3.25/7.17	12/26.46

(1) Selection of one of the jumper connection options is mandatory
(2) Openings with SOR or UVR

MOLDED CASE CIRCUIT-BREAKERS UP TO 1500V DC

			T4N/PV-E
Frame size		[A]	200
Rated service current		[A]	40-200
Poles			4
Standard			UL 489 B-F (3)
Product certification			UL489B-F - CCC
Rated service voltage		[VDC]	1500
Rated insulation voltage		[VDC]	1500
Short-circuit interrupting rating		[kA]	25 (UL 489 B, τ = 1 ms) 10 (UL 489 F, τ = 3 ms)
Thermomagnetic releases			TMF
Electronic trip unit			-
Version			F
Connections (1)			Jumpers
Standard terminals			F
Terminals provided with Jumper kit (see ordering codes for details)			F-FCCu-FCCuAl
Mechanical life		[No. operations]	7500
Electrical life		[No. operations]	1000 (2)
Dimensions		W [mm/in]	105/4.13
		D [mm/in]	103.5/4.07
		H [mm/in]	205/8.07
Weight (with standard terminals)	Fixed	[kg/lbs]	2.35/5.18

(1) Selection of one of the jumper connection options is mandatory
(2) Openings with SOR or UVR
(3) UL489B-F in Ungrounded installations, UL489B in Grounded installation

MOLDED CASE SWITCH-DISCONNECTORS UP TO 1000V DC

			T4N-D/PV	T5N-D/PV	T6N-D/PV	T7N-D/PV [1]
Rated service current		[A]	200	400	600-800	1000
Poles			3	3	4	4
Standard			UL489B	UL489B	UL489B	UL489B
Product certification			UL489B	UL489B	UL489B-CCC	UL489B-CCC
					DC-22B/ DC-PV-2	DC-22B/DC-PV-2
Rated service voltage		[VDC]	1000	1000	1000	1000
Rated insulation voltage		[VDC]	1150	1150	1150	1150
Short-circuit current withstand		[kA]	3	5	10	18
Version			F	F	F	F
Connections [2]			Jumpers	Jumpers	Jumpers	Jumpers
Standard terminals			F	F	F	F
Terminals provided with Jumper kit (see ordering codes for details)			FCCuAl	FCCu-ES	FCCuAl - EF	FCCuAl - F
Mechanical life		[No. operations]	7500	7500	7500	20000
Electrical life		[No. operations]	1000 [3]	500 [3]	500 [3]	500 [3]
Dimensions		W [mm/in]	105/4.13	140/5.52	280/11.02	280/11.02
		D [mm/in]	103.5/4.07	103.5/4.07	103.5/4.07	178/7.01
		H [mm/in]	205/8.07	205/8.07	268/10.55	268/10.55
Weight (with standard terminals)	Fixed	[kg/lbs]	2.35/5.18	3.25/7.17	12/26.46	14/30.86

(1) Installation in vertical position only
(2) Selection of one of the jumper connection options is mandatory
(3) openings with SOR or UVR

MOLDED CASE SWITCH-DISCONNECTORS UP TO 1500V DC

			T4N-D/PV-E	T7N-D/PV-E [1]
Rated service current		[A]	200	1000-1200
Poles			4	4
Standard			UL 489 B-F [4] IEC 60947-3 Annex D (DC-PV2)	UL489B
Product certification			UL489B/F - CCC DC-22A/DC-PV2	UL489B
Rated service voltage		[VDC]	1500	1500
Rated insulation voltage		[VDC]	1500	1500
Short-circuit current withstand		[kA]	3	18
Version			F	F
Connections [2]			Jumpers	Jumpers
Standard terminals			F	F
Terminals provided with Jumper kit (see ordering codes for details)			F - FCCu -FCCuAl	1000A: F / FCCuAl 1200A: EF
Mechanical life		[No. operations]	7500	20000
Electrical life		[No. operations]	1000 [3]	400 [3]
Dimensions		W [mm/in]	105/4.13	280/11.02
		D [mm/in]	103.5/4.07	178/7.01
		H [mm/in]	205/8.07	268/10.55
Weight (with standard terminals)	Fixed	[kg/lbs]	2.35/5.18	14/30.86

(1) Installation in vertical position only
(2) Selection of one of the jumper connection options is mandatory
(3) Openings with SOR or UVR
(4) UL489B-F in Ungrounded installations, UL489B in Grounded installation

CONNECTION IN SERIES WITH JUMPERS KITS

ABB jumpers for pole-to-pole connection are the tested solution for a simplified and safe installation.

In DC applications the performance of switch disconnectors and circuit breakers are strongly influenced by the wiring methods, especially when realizing the series of 2 side-by-side poles. In order to help the wiring ABB supplies kits of jumpers shaped to fit perfectly on products.
The choice of the right jumpes is based on the needs of the installation. It is possible to realize the connection of all poles on one single polarity (3PS and 4PS jumpers) or to divide the poles on both polarities (2+2PS and 2+1PS). See page 2/9 and 8/2 to find out connection diagrams and jumpers kit codes.
Some of the jumpers are realized with heat sink to assure the right heat dissipation when required.
Performance declared in the DC switch disconnector and circuit breaker tables are tested with ABB original jumpers.

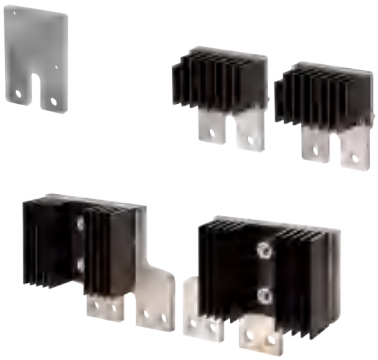

COMPATIBILITY TABLE JUMPERS KIT AND MCCBS/SWITCH DISCONNECTORS - IEC

			2+2PS	4PS
Switch Disconnectors	1100VDC	T4D/PV	1SDA070454R1	1SDA070455R1
		T5D/PV	1SDA070456R1	1SDA070457R1
		T6D/PV	1SDA070491R1	1SDA070492R1
		T7D/PV M (1250A)	1SDA070429R1	1SDA070430R1
		T7D/PV M (1600A)	1SDA070431R1	1SDA070432R1
	1500VDC	T4D/PV-E	1SDA070454R1	1SDA070455R1
		T5D/PV-E	1SDA076899R1	
		T7D/PV-E M (1250A)	1SDA070429R1	1SDA070430R1
		T7D/PV-E M (1600A)	1SDA070431R1	1SDA070432R1
Circui Breakers	1000VDC	T4V	1SDA082627R1	
		T5V	1SDA082628R1	
		T6V	1SDA082630R1	
	1500VDC	T4N/PV-E (200A)	1SDA085254R1	1SDA085255R1
		T4N/PV-E (250A)	1SDA085251R1	1SDA085253R1

COMPATIBILITY TABLE JUMPERS KIT AND MCCBS/SWITCH DISCONNECTORS - UL (1)

			2+1PS	3PS	2+2PS	4PS
Switch Disconnectors	1000VDC	T4N-D/PV (up to 100A)	1SDA070483R1 (FC Cu 1x50mm²)	1SDA070485R1 (FC Cu 1x50)		
		T4N-D/PV (200A)	1SDA070484R1 (FC CuAl 1x185mm²)	1SDA070486R1 (FC CuAl 1x185mm²)		
		T5N-D/PV (225A)	1SDA079821R1	1SDA079824R1		
		T5N-D/PV (250A)	1SDA079823R1	1SDA079825R1		
		T5N-D/PV (300A)	1SDA070487R1 (FC Cu 2x240mm²)	1SDA070488R1 (FC Cu 2x240mm²)		
		T5N-D/PV (400A)	1SDA070487R1 (FC Cu 2x240mm²) 1SDA074504R1 (ES)	1SDA070488R1 (FC Cu 2x240mm²) 1SDA074505R1 (ES)		
		T6N-D/PV (600A)			1SDA070499R1 (FC CuAl 3x185mm²)	1SDA070500R1 (FC CuAl 3x185mm²)
		T6N-D/PV (800A)			1SDA070501R1 (EF)	1SDA070502R1 (EF)
		T7N-D/PV (1000A)			1SDA070451R1 (FC CuAl 4x240mm²) 1SDA081762R1	1SDA070452R1 (FC CuAl 4x240mm²) 1SDA081763R1
		T7N-D/PV (1200A)			1SDA083038R1	1SDA083039R1
	1500VDC	T4N-D/PV-E (200A)	1SDA107439R1 (FC CuAl 1x185mm²)	1SDA107441R1 (FC CuAl 1x185mm²)	1SDA107441R1 (FC CuAl 1x185mm²)	1SDA107443R1 (FC CuAl 1x185mm²)
		T7N-D/PV-E (1000A)			1SDA070451R1 (FC CuAl 4x240mm²) 1SDA081762R1	1SDA070452R1 (FC CuAl 4x240mm²) 1SDA081763R1
		T7N-D/PV-E (1200A)			1SDA083038R1	1SDA083039R1
Circui Breakers	1000VDC	T4N/PV (up to 100A)	1SDA070483R1 (FC Cu 1x50mm²)	1SDA070485R1 (FC Cu 1x50)		
		T4N/PV (200A)	1SDA070484R1 (FC CuAl 1x185mm²)	1SDA070486R1 (FC CuAl 1x185mm²)		
		T5N-D/PV (225A)	1SDA079821R1	1SDA079824R1		
		T5N-D/PV (250A)	1SDA079823R1	1SDA079825R1		
		T5N-D/PV (300A)	1SDA070487R1 (FC Cu 2x240mm²)	1SDA070488R1 (FC Cu 2x240mm²)		
		T5N-D/PV (400A)	1SDA070487R1 (FC Cu 2x240mm²) 1SDA074504R1 (ES)	1SDA070488R1 (FC Cu 2x240mm²) 1SDA074505R1 (ES)		
		T6N-D/PV (600A)			1SDA070499R1 (FC CuAl 3x185mm²)	1SDA070500R1 (FC CuAl 3x185mm²)
		T6N-D/PV (800A)			1SDA070501R1 (EF)	1SDA070502R1 (EF)
	1500VDC	T4N-D/PV-E (up to 100A)	1SDA107438R1 (FC CuAl 1x50mm²)	1SDA107440R1 (FC CuAl 1x50mm²)	1SDA107440R1 (FC CuAl 1x50mm²)	1SDA107442R1 (FC CuAl 1x50mm²)
		T4N-D/PV-E (200A)	1SDA107439R1 (FC CuAl 1x185mm²)	1SDA107441R1 (FC CuAl 1x185mm²)	1SDA107441R1 (FC CuAl 1x185mm²)	1SDA107443R1 (FC CuAl 1x185mm²)

(1) when Jumpers KIT is supplied with specific terminals, then the terminal type is specified at th end of the code

04

SACE TMAX T FOR APPLICATIONS FROM 800V AC TO 1150V AC

4/2 **Ranges**

4/2 Circuit breakers up to 800V AC - IEC

4/3 Circuit breakers up to 1000V AC - IEC

4/4 Circuit breakers up to 1150V AC - IEC

4/4 Switch disconnectors up to 1150V AC - IEC

4/5 Circuit breakers up to 800V AC - UL

Ranges

CIRCUIT BREAKERS UP TO 800V AC - IEC

			T4V-HA	T5V-HA	T5X-HA	XT5X-HVA8 [1]
Rated service current		[A]	80-250	320-630	320-400	320-400
Poles			3/4	3/4	3/4	3/4
Standard			IEC 60947-2/ GB14048.2	IEC 60947-2/ GB14048.2	IEC 60947-2/ GB14048.2	IEC 60947-2/ GB14048.2
Rated service voltage		[VAC]	800	800	800	800
Rated impuls withstand voltage		[VAC]	8	8	8	8
Rated insulation voltage		[VAC]	1000	1000	1000	1000
Rated breaking capacity, Icu		[kA]	25	32	35	50
Rated service breaking capacity, Ics		[kA]	12	16	18	25
Isolation behaviour		[kA]	Yes	Yes	Yes	Yes
Category of use		[kA]	A	A	A	A
Product certification			IEC - CCC	IEC - CCC	IEC - CCC	IEC - CCC
Thermomagnetic releases			TMA	TMA (Up to 500A)	-	TMA
Electronic trip units			PR222DS-LSIG (250A)	PR221 (630A)	PR222DS-LSIG	EkipDip LS/I, LSI, LSIG
Version			F	F	F	F
Class of pollution			III	III	III	III
Terminals			F - FcCuAl - FcCu	F - FcCuAl - FcCu	F - FcCuAl - FcCu	F - FcCuAl
Mechanical life		[No. operations]	20000	20000	20000	20000
Electrical life		[No. operations]	2000	1000	1000	1000
Dimensions		3P W [mm/in]	105/4.13	140/5.52	140/5.52	140/5.52
		4P W [mm/in]	140/5.52	186/7.32	186/7.32	186/7.32
		D [mm/in]	103.5/4.07	103.5/4.07	103.5/4.07	103/4.05
		H [mm/in]	205/8,07	205/8,07	205/8,07	205/8,07
Weight (with standard terminals)	Fixed	3P [kg/lbs]	2.35/5.18	3,25/7.17	3,25/7.17	3,25/7.17
		4P [kg/lbs]	3.05/6.72	3,15/9.15	3,15/9.15	3,15/9.15

1) Complete information about XT5X -HVA8 are available in the document 1SDC210350B0201

CIRCUIT BREAKERS UP TO 1000V AC - IEC

			T4L	T4V(1)	T5L	T5V(1)	T6L(1)
Rated service current		[A]	250		400-630		630-800
Poles			3/4		3/4		3/4
Standard			IEC 60947-2		IEC 60947-2		IEC 60947-2
Rated service voltage		[VAC]	1000		1000		1000
Test voltage at power frequency for 1 min.		[VAC]	3500		3500		3500
Rated impulse withstand voltage		[VAC]	8		8		8
Rated insulation voltage		[VAC]	1000		1000		1000
Rated breaking capacity, Icu		[kA]	12	20	12	20	12
Rated service breaking capacity, Ics		[kA]	12	12	10	12	6
Isolation behaviour		[kA]	Yes		Yes		Yes
Category of use		[kA]	A		400A: B(2) 630A: A		B(3)
Product certification			IEC	IEC - CCC	IEC	IEC - CCC	IEC - CCC
Thermomagnetic releases			-	TMD TMA	-	TMA	TMA
Electronic trip units			PR221DS PR222DS/P	PR221DS PR222DS/P	PR221DS PR222DS/P PR222DS/PD	PR221DS PR222DS/P PR222DS/PD	PR221DS PR222DS/P PR222DS/PD
Electronic trip units for motor protection			Ekip M-LRIU	-	Ekip M-LRIU	-	-
Version			F, P, W	F	F, P, W (4)	F	F (5)
Class of pollution			III		III		III
Terminals			FC Cu - F* - EF*		FC Cu - F* - EF*		F - FC CuAl** - R - EF* - ES*
Mechanical life		[No. operations]	20000		20000		20000
Electrical life		[No. operations]	1000		1000		1000
Dimensions		3P W [mm/in]	105/4.13		140/1.57		210/8.27
		4P W [mm/in]	140/1.57		184/7.24		280/11.02
		D [mm/in]	103.5/4.07		103.5/4.07		103.5/4.07
		H [mm/in]	205/8.07		205/8.07		268/10.55
Weight (with standard terminals)	Fixed	3P [kg/lbs]	2.35/5.18		3.25/7.17		9.5/20.94
		4P [kg/lbs]	3.05/6.72		4.15/9.15		12.0/26.46
	Plug-in	3P [kg/lbs]	3.60/7.94		5.15/11.35		
		4P [kg/lbs]	4.65/10.25		6.65/14.66		-
	Withdrawable	3P [kg/lbs]	3.85/8.49		5.40/11.91		
		4P [kg/lbs]	4.90/10.80		6.90/15.21		-

(1) Power supply only from the top
(2) Icw 5kA
(3) Icw = 7.6 kA (630 A) - 10 kA (800 A)
(4) Tmax T5 630 is only available in the fixed version
(5) For T6 in the withdrawable version, please ask ABB SACE
* Ordering extracodes
**Ordering standard 1SDA0 codes

Ranges

CIRCUIT BREAKERS UP TO 1150V AC - IEC

			T4V (1)	T5V (1)
Rated service current		[A]	250	400-630
Poles			3/4	3/4
Standard			IEC 60947-2	IEC 60947-2
Rated service voltage		[VAC]	1150	1150
Test voltage at power frequency for 1 min.		[VAC]	3500	3500
Rated impulse withstand voltage		[VAC]	8	8
Rated insulation voltage		[VAC]	1150	1150
Rated breaking capacity, Icu		[kA]	12	12
Rated service breaking capacity, Ics		[kA]	6	6
Isolation behaviour		[kA]	Yes	Yes
Category of use		[kA]	A	400A: B(2) 630A: A
Product certification			**IEC**	**IEC**
Thermomagnetic releases			TMD TMA	TMA
Electronic trip units			PR221DS PR222DS/P	PR221DS PR222DS/P PR222DS/PD
Version			F	F
Class of pollution			III	III
Terminals			FC Cu - F* - EF*	FC Cu - F* - EF*
Mechanical life		[No. operations]	20000	20000
Electrical life		[No. operations]	1000	1000
Dimensions		3P W [mm/in]	105/4.13	140/1.57
		4P W [mm/in]	140/1.57	184/7.24
		D [mm/in]	103.5/4.07	103.5/4.07
		H [mm/in]	205/8.07	205/8.07
Weight (with standard terminals)	Fixed	3P [kg/lbs]	2.35/5.18	3.25/7.17
		4P [kg/lbs]	3.05/6.72	4.15/9.15

(1) Power supply only from the top
(2) Icw 5kA
* Ordering extracodes

SWITCH DISCONNECTORS UP TO 1150V AC - IEC

			T4D (1)
Rated service current		[A]	250
Poles			3
Standard			IEC 60947-3
Product certification			IEC
Rated service voltage		[VDC]	1150
Rated insulation voltage		[VDC]	1150
Short-circuit current withstand		[kA]	3,6
Version			F
Standard terminals			F
"Terminals provided with Jumper kit (see ordering codes for details)"			-
Mechanical life		[No. operations]	2000
Electrical life		[No. operations]	1000
Dimensions		W [mm/in]	105/4.13
		D [mm/in]	103.5/4.07
		H [mm/in]	205/8.07
Weight (with standard terminals)	Fixed	3P [kg/lbs]	2.35/5.18

(1) Order code for T4D 1150V AC is 1SDA069472R1

CIRCUIT BREAKERS UP TO 800V AC - UL

			T4V-HA	T5V-HA	T5X-HA
Rated service current		[A]	80-200	300	300
Rated			Up to 150A: 100% 200A: 80%	100%	100%
Poles			3/4	3/4	3/4
Standard			UL489 - IEC60947-2	UL489 - IEC60947-2	UL489
Rated service voltage		[VAC]	800	800	800
Test voltage at power frequency for 1 min.		[VAC]	3500	3500	3500
Rated impuls withstand voltage		[VAC]	8	8	8
Rated insulation voltage		[VAC]	1000	1000	1000
Distribution system			Δ	Δ	Δ
Short circuit interrupting rating		[kA]	25	25	35
Isolation behaviour		[kA]	Yes	Yes	Yes
Product certification			UL - IEC - CCC	UL - IEC - CCC	UL
Thermomagnetic releases			TMA	TMA	TMA
Electronic trip units			-	PR221	PR221
Version			F	F	F
Class of pollution			III	III	III
Terminals			FcCuAl (1x350kcmil)	FcCuAl (1x500kcmil)	FcCuAl (1x500kcmil)
Mechanical life		[No. operations]	20000	20000	20000
Electrical life		[No. operations]	4000	1000	1000
Dimensions		3P W [mm/in]	105/4.13	140/1.57	140/1.57
		4P W [mm/in]	140/1.57	184/7.24	184/7.24
		D [mm/in]	103.5/4.07	103.5/4.07	103.5/4.07
		H [mm/in]	205/8.07	205/8.07	205/8.07
Weight (with standard terminals)	Fixed	3P [kg/lbs]	2.35/5.18	3.25/7.17	3.25/7.17
		4P [kg/lbs]	3.05/6.72	4.15/9.15	4.15/9.15

05

PROTECTION TRIP UNITS

5/2 **Thermal-magnetic trip unit**
5/2 Overview
5/2 Protection settings
5/3 **Electronic trip units**
5/3 Overview
5/4 PR221DS
5/6 PR222DS/P
5/7 PR222DS/PD
5/8 **Electronic trip unit for Motor protection**
5/8 General characteristics
5/9 Integrated protection: Ekip M-LRIU
5/10 Protection functions - Manual Settings
5/11 Additional Electronic Settings
5/11 Interface to contactor
5/12 Protection functions and parameterisation

THERMAL-MAGNETIC TRIP UNIT

SACE Tmax XT5 -HVA8 Molded Case Circuit Breakers for IEC Applications up to 800VAC

The Tmax T4*, T5 and T6 circuit-breakers can be fitted with thermomagnetic trip units and are used in protection of alternating and direct current networks with a range of use from 32 A to 800 A. They allow the protection against overload with a thermal device realised using the bimetal technique, and protection against short-circuit with a magnetic device.

The four-pole circuit-breakers are always supplied with the neutral protected by the trip unit and with protection of the neutral at 100% of the phase setting.

Note: For Tmax XT5X-HVA8 the EkipDip trip units LS/I, LSI and LSIG are available. Please refer to document 1SDC210350B0201 for setting details.

Thermomagnetic trip units TMD/TMA (for T4, T5 and T6)

Threshold
Adjustable

Thermal threshold
Adjustable from
0.7 to 1 x In

TMA = thermomagnetic trip unit with adjustable thermal threshold (I_1 = 0.7...1 x In) and adjustable magnetic threshold (I_3 = 5...10 x In)
*T4N/PV-E is only available with TMF trip unit (both thermal and magnetic thresholds are fixed)

TMD/TMA - T4

I1 =0.7...1 x In	In [A]	32	50	80	100	125	160	200	250
	Neutral [A] - 100%	32	50	80	100	125	160	200	250
I3 = 10 x In **I3 = 5...10 x In**	I_3 = 10 x In [A]	320	500						
	I_3 = 5...10 x In [A]			400...800	500...1000	625...1250	800...1600	1000...2000	1250...2500
	Neutral [A] - 100%	320	500	400...800	500...1000	625...1250	800...1600	1000...2000	1250...2500

TMA - T5

I1 = 0.7...1 x In	In [A]	320	400	500
	Neutral [A] - 100%	320	400	500
I3 = 5...10 x In	I_3 [A]	1600...3200	2000...4000	2500...5000
	Neutral [A] - 100%	1600...3200	2000...4000	2500...5000

TMA - T6

I1 = 0.7...1 x In	In [A]	630	800
	Neutral [A] - 100%	630	800
I3 = 5...10 x In	I_3 [A]	3150...6300	4000...8000
	Neutral [A] - 100%	3150...6300	4000...8000

Notes
– In identifies the setting current for protection of the phases (L1, L2 and L3) and of the neutral.
– The TMA thermomagnetic trip units which equip the Tmax T4, T5 and T6 circuit-breakers have the thermal element with adjustable threshold I_1 = 0.7...1 x In. The set current value which is obtained using the special selector is intended at 40 °C. The magnetic element has adjustable trip threshold I_3 = 5...10 x In with a tolerance of ± 20% according to what is indicated in the IEC 60947-2 (par. 8.3.3.1.2) Standard. The trip thresholds of the magnetic protection I_3 are a function of the setting used both by the phase and neutral protection.

ELECTRONIC TRIP UNITS

Tmax T4, T5 and T6 circuit-breakers, for use in alternating current, can be equipped with overcurrent releases constructed using electronic technology. This allows protection functions to be obtained which guarantee high reliability, tripping precision and insensitivity to temperature and to the electromagnetic components in conformity with the standards on the matter.
The power supply needed for correct operation is supplied directly by the current sensors of the release, and tripping is always guaranteed, even under single-phase load conditions and in correspondence with the minimum setting.

These protection trip units consists of:
- 3 or 4 current sensors (current transformers)
- a trip unit
- a trip coil integrated in the electronic trip unit.

Note: For Tmax XT5X-HVA8 the EkipDip trip units LS/I, LSI and LSIG are available. Please refer to document 1SDC210350B0201 for setting details.

SACE Tmax XT5 -HVA8
Molded Case Circuit Breakers for IEC Applications up to 800VAC

CHARACTERISTICS OF THE TMAX ELECTRONIC TRIP UNITS

Operating temperature	-25 °C ... +70 °C
Relative humidity	98%
Self-supply	0.2 x In (single phase)
Auxiliary power supply (where applicable)	24 V DC
Operating frequency	45...66 Hz
Electromagnetic compatibility (LF and HF)	IEC 60947-2 Annex F

CURRENT SENSORS

	In [A]	100	250	320	400	630	800
PR221DS	T4	●	●	●			
	T5			●	●	●	
	T6					●	●
PR222DS/P, PR222DS/PD	T4	●	●	●			
	T5			●	●	●	
	T6					●	●

When a protection function trips, the circuit-breaker opens by means of the trip coil, which changes over a contact (AUX-SA, supplied on request, see chapter “Accessories” at page 5/01 and following) to signal trip unit tripped. Signalling reset is of mechanical type and takes place with resetting of the circuit-breaker.

BASIC PROTECTION FUNCTIONS

(L) Protection against overload
This protection function trips when there is an overload with inverse long-time delay trip according to the IEC 60947-2 Standard (I^2t=k). The protection cannot be excluded.

(S) Protection against short-circuit with time delay
This protection function trips when there is a short-circuit, with long inverse time-delay trip (I^2t=k ON) or a constant trip time (I^2t=k OFF). The protection can be excluded.

(I) Instantaneous protection against short-circuit
This protection function trips instantaneously in case of a short-circuit. The protection can be excluded.

(G) Protection against earth fault
The protection against earth fault trips when the vectorial sum of the currents passing through the current sensors exceeds the set threshold value, with long inverse time-delay trip (I^2t=k ON) or a constant trip time (I^2t=k OFF). The protection can be excluded.

ELECTRONIC TRIP UNITS

SACE PR221DS

	PR221DS	PR221DS
Protection functions	L S / I	I

SACE PR222DS/P

	PR222DS/P	PR222DS/P
Protection functions	L S I	L S I G

SACE PR222DS/PD

	PR222DS/PD	PR222DS/PD
Protection functions	L S I	L S I G

PR221DS

The PR221DS trip unit, available for T4, T5 and T6, provides protection functions against overload L and short-circuit S/I (version PR221DS-LS/I): with this version, by moving the dedicated dip-switch, you can choose whether to have inverse time-delay S or instantaneous I protection against short-circuit. Alternatively, the version with only the protection function against instantaneous short-circuit I is available (version PR221DS-I.

There is a single adjustment for the phases and the neutral. For T4, T5 and T6 it is possible to select the protection threshold OFF, 50% or 100% directly from the front of the trip unit by means of the specific dip switch.

For Tmax T4, T5 and T6, the opening solenoid is housed internally and therefore, by not using the right-hand slot of the circuit-breaker, all the auxiliary contacts available can be used.

PR221DS-LS/I

Protection S
Against short-circuit
with delayed trip

Dip-switch for
neutral setting
(only for T4, T5 and T6)

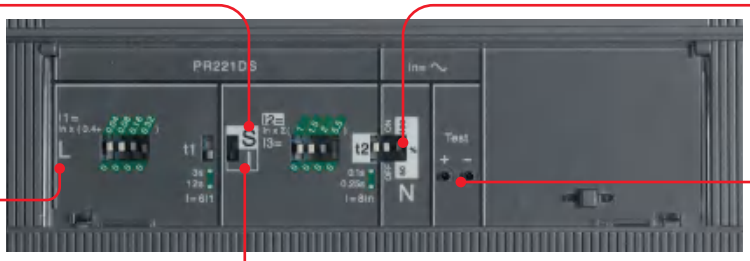

Protection L
Against overload

Socket for
Ekip TT test unit

Protection I
Against short-circuit
with instantaneous trip

PROTECTION FUNCTIONS AND PARAMETERISATIONS

Protection functions (1)	Trip threshold	Trip curves	Excludability	Relation t=f(I)
Against overload with long inverse time delay trip and trip characteristic according to an inverse time curve ($I^2t=k$) according to IEC 60947-2 Standard	I_1 = 0.40 - 1 x In step = 0.04 x In Trip between 1.1...1.30 x I_1 (T4,T5,T6)	at 6 x I_1 t_1 = 3-12s Tolerance: ± 10% up to 6 x In ± 20% above 6 x In	–	$t = k/I^2$
Against short-circuit with inverse short time delay trip and trip characteristic with inverse time ($I^2t=k$) (selectable as an alternative to protection function I)	I_2 = 1-1.5-2-2.5-3-3.5-4.5-5.5-6.5-7-7.5-8-8.5-9-10 x In (2) Tolerance: ± 10% (T4,T5,T6)	at 8 x In t_2 = 0.1 - 0.25s Tolerance: ± 10% up to 6 x In ± 20% above 6 x In	●	$t = k/I^2$
Against short-circuit with instantaneous trip (selectable as an alternative to protection function S)	I_3 = 1-1.5-2-2.5-3-3.5-4.5-5.5-6.5-7-7.5-8-8.5-9-10 x In (2) Tolerance: ± 10% (T4,T5,T6)	instantaneous	●	t = k

(1) These tolerances hold in the following conditions:
– self-powered trip unit at full power (without start-up)
– two or three-phase power supply

In conditions other than those considered, the following tollerances hold:

	Trip threshold	Trip time
S	± 20%	± 20%
I	± 20%	≤ 40ms

(2) For T4 In = 320 A. T5 In = 630 A and T6 In = 1000 A ⇒ I_2max = 9.5 x In, I_3max = 9.5 x In.
The setting at 10 x In corresponds to 9.5 x In.

PR222DS/P

The PR222DS/P trip unit, available for T4, T5 and T6, has protection functions against overload L, delayed S and instantaneous I short-circuit (version PR222DS/P-LSI). Alternatively, as well as the functions L, S, I, it also has protection against earth fault G (version PR222DS/P-LSIG). Setting of the PR222DS trip unit can be carried out by means of dip switches on the front of the circuit-breaker or electronically, using the Ekip T&P programming and control unit. There is a single setting for the phases and neutral, for which one can decide whether to set the threshold of the protection functions to OFF, to 50% or to 100% that of the phases by means of two dedicated dip switches.
Furthermore, on the front of the PR222DS/P (or PR222DS/PD) trip units, signalling of pre-alarm and alarm of protection L is available. The pre-alarm threshold value, signalled by the red LED fixed, is equal to 0.9 x I1. It is also possible to transmit remotely the alarm of protection L, simply connecting connector X3 to the dedicated contact.

PR222DS/PD

Apart from the protection functions available for the PR222DS/P trip unit (for the settings see page 2/20), the PR222DS/PD trip unit, available for T5 and T6 also has the dialogue unit integrated with Modbus® RTU protocol. The Modbus® RTU protocol has been known and used worldwide for many years and is now a market standard thanks to its simplicity of installation, configuration and to its integration in the various different supervision, control and automation systems, as well as good level performances. The PR222DS/PD trip units allow the Tmax T5 and T6 circuit-breakers to be integrated in a communication network based on the Modbus® RTU protocol. Modbus® RTU provides a Master-Slave system architecture where a Master (PLC, PC...) cyclically interrogates several Slaves (field devices). The devices use the EIA RS485 standard as the physical means for data transmission at a maximum transmission speed of 19.2 kbps. Again for this trip unit, the power supply needed for correct operation of the protection functions is supplied directly by the current transformers of the trip unit, and tripping is always guaranteed, even under conditions of single-phase load down. Nevertheless, communication is only possible with an auxiliary power supply of 24 V DC.

PR222DS/PD - ELECTRICAL CHARACTERISTICS	
Auxiliary power supply (galvanically insulated)	24 V DC ± 20%
Maximum ripple	± 5%
Inrush current @ 24 V	1 A for 30 ms
Rated current @ 24 V	100 mA
Rated power @ 24 V	2.5 W

The PR222DS/PD release, with integrated communication and control functions, allows a wide range of information to be acquired and transmitted remotely, opening and closing commands to be carried out by means of the electronic version motor operator, the configuration and programming parameters of the unit to be stored, such as the current thresholds of the protection functions and the protection curves.
The PR222DS/PD trip units can be associated with the AUX-E auxiliary contacts in electronic version, to know the state of the circuit-breaker (open/closed), and with MOE-E motor operator (the AUX-E are compulsory when MOE-E is to be used) to remotely control circuit- breaker opening and closing as well. If the circuit-breaker fitted with the PR222DS/PD trip unit is inserted in a supervision system, during the test phases with the Ekip T&P unit, communication is automatically abandoned and starts again on completion of this operation.

ELECTRONIC TRIP UNITS

Communication functions	**PR222DS/P**	**PR222DS/PD**
Protocol		Modbus RTU standard
Physical medium		EIA RS485
Speed (maximum)		19.2 kbps
Measurement functions		
Phase currents	●(1)	●
Neutral current	●(1)	●
Ground current	●(1)	●
Signalling functions		
L pre-alarm and alarm LED	●(5)	●(5)
L alarm output contact (2)	●	●
Available data		
Circuit-breaker status (open, closed) (3)		●
Mode (local, remote)		●
Protection parameters set	●(1)	●
Alarms		
Protections: L, S, I, G	●(1)	●
Failed tripping under fault conditions	●(1)	●
Maintenance		
Total number of operations (3)		●
Total number of trips		●
Number of trip tests		●
Number of manual operations		●
Number of trips for each individual protection function		●
Record of last trip data		●
Commands		
Circuit-breaker opening/closing (with motor operator)		●
Alarm reset	●(1)	●
Circuit-breaker reset (with motor operator)		●
Setting the curves and protection thresholds	●(1)	●
Safety function		
Automatic opening in the case of failed Trip command fail (with motor operator) (4)		●
Events		
Changes in circuit-breaker state, in the protections and all the alarms		●

(1) With Ekip T&P
(2) Typical contact: MOS photo Vmax: 48 V DC/30 V AC
Rmax = 35 ohm
(3) Available with AUX-E electronic auxiliary contacts
(4) The motor operator must be in electronic version (MOE-E) and electronic auxiliary contacts (AUX-E) have to be used
(5) Signals: – Pre-alarm L - permanently lit
– Alarm L - flashing (0.5 s ON / 0.5 s OFF)
– Incongruent manual setting (L > S / S > I) - flashing (1 s ON / 2 s OFF)
– WINK (remote control to identify the relay) - flashing (0.125 s ON / 0.125 s OFF)
(6) With VM210 on PR223DS

PR222DS/P

Protection S
Against short-circuit with delayed trip

Protection L
Against overload

Socket for Ekip TT test unit

Socket for connection of Ekip T&P test unit

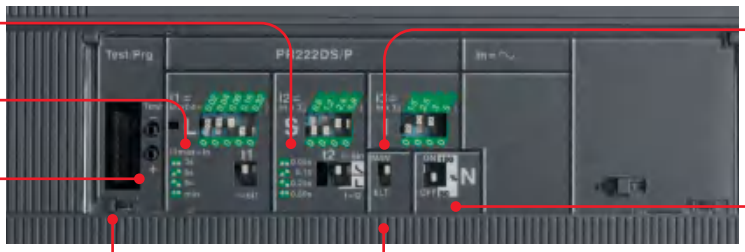

Protection I
Against short-circuit with instantaneous trip

Dip-switch for neutral setting

Selection for electronic or manual setting

PR222DS/PD

Protection S
Against short-circuit
with delayed trip

Protection L
Against overload

Socket for Ekip TT test unit

Socket for connection of
Ekip T&P test unit

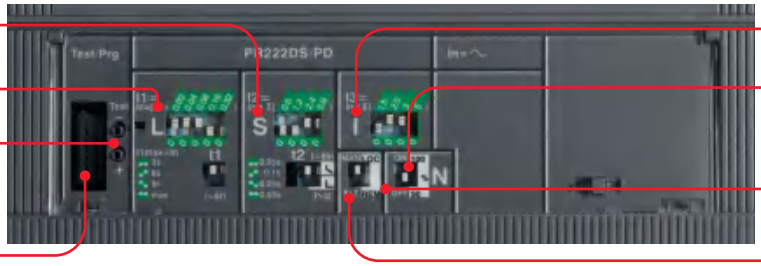

Protection I
Against short-circuit
with instantaneous trip

Dip-switch for neutral setting

Enablement of remote operations

Selection for electronic or
manual setting

PR222DS/P and PR222DS/PD - Protection functions and parameterisations

Protection functions	Trip threshold	Trip curves	Excludability	Relation t=f(I)
Against overload with long inverse time delay trip and trip characteristic according to an inverse time curve (I^2t=k) according to IEC 60947-2 Standard	**Manual setting** I_1 = 0.40 - 1 x In step = 0.02 x In	**Manual setting** at 6 x I_1 t_1 = 3-6-9/12 MAX (2)	–	$t = k/I^2$
	Electronic setting I_1 = 0.40 - 1 x In step = 0.01 x In Trip between 1.1...1.3 x I_1	**Electronic setting** at 6 x I_1 t_1 = 3...18s step 0.5s (2) Tolerance: ± 10%		
Against short-circuit with inverse short time delay trip and trip characteristic with inverse time (I^2t=k) or definite time	**Manual setting** I_2 = 0.6-1.2-1.8-2.4-3-3.6-4.2-5.8-6.4-7-7.6-8.2-8.8-9.4-10 x In (3)	**Manual setting** at 8 x In t_2 = 0.05 - 0.1- 0.25 - 0.5s	●	$t = k/I^2$
	Electronic setting I_1 = 0.40 - 1 x In step = 0.01 x In Tolerance: ± 10%	**Electronic setting** at 8 x In t_2 = 0.05...0.5s step 0.01s Tolerance: ± 10% (4)		
	Manual setting I_2 = 0.6-1.2-1.8-2.4-3-3.6-4.2-5.8-6.4-7-7.6-8.2-8.8-9.4-10 x In (3)	**Manual setting** t_2 = 0.05 - 0.1 - 0.25 - 0.5s		
	Electronic setting I_2 = 0.60...10 x In step 0.1 x In Tolerance: ± 10%	**Electronic setting** t_2 =0.05...0.5s step 0.01s Tolerance: ± 10% (4)		
Against short-circuit with instantaneous trip	**Manual setting** I_3 = 1.5-2.5-3-4-4.5-5-5.5-6.5-7-7.5-8-9-9.5-10.5-12 x In (3)	instantaneous	●	t = k
	Electronic setting I_3 = 1.5...12 x In (3) step 0.1 x In Tolerance: ± 10%			
Against earth fault with inverse short time delay trip and trip characteristic according to an inverse time curve (I^2t=k)	**Manual setting** I_4 = 0.2-0.25-0.45-0.55-0.75-0.8-1 x In (3)	**Manual setting** up to 3.15 x I_4 t_4 = 0.1s; up to 2.25 x I_4 t_4 = 0.2s; up to 1.6 x I_4 t_4 = 0.4s; up to 1.10 x I_4 t_4 = 0.80s	●	$t = k/I^2$ (6)
	Electronic setting I_4 = 0.2...1 x In (3) step 0.1 x In Tolerance: ± 10%	**Electronic setting** t_4 =0.1...0.8s step 0.01s Tolerance: ± 10% (4)		

(2) t_1 values for MAX setting:

CB	Electronic setting	Manual setting
T4 320 **T5 630**	3...10.5s Step 0.5s	3-6-9-10.5
T4 250 **T5 400**	3...18s Step 0.5s	3-6-9-18
T6 800	3...18s Step 0.5s	3-6-9-18
T6 630	3...18s Step 0.5s	3-6-12-18

(1) These tolerances hold in the following conditions:
– self-powered trip unit at full power (without start-up)
– two or three-phase power supply
In conditions other than those considered, the following tollerances hold:

	Trip threshold	Trip time
S	± 20%	± 20%
I	± 20%	≤ 50ms
G	± 20%	± 20%

(3) For T4 In = 320 A and T5 In = 630 A ⇒ I_2max = 9.5 x In and I_3max = 9.5 x In
For T6 In = 800 A ⇒ I_3max = 10.5 x In
(4) Tolerance: ± 10 ms
(6) $t = k/I^2$ up to the current value indicated, t = k (equating to the chosen setting) beyond the current value indicated

ELECTRONIC TRIP UNITS FOR MOTOR PROTECTION

General characteristics

Starting, switching and protection of three-phase asynchronous motors are basic operations for their correct use. ABB SACE proposes two different solutions for this type of application:

- a traditional system, which foresees a circuit-breaker for protection against short-circuit, a thermal relay for protection against overload and missing or unbalanced phase and a contactor for motor switching;
- a system of integrated protection thanks to the Ekip M-LRIU trip unit, which ensures both protection against short-circuit, and against overload, as well as that against missing or unbalanced phase and that against the rotor block.

All this must necessarily take into account the problems which arise at the moment of starting.

In particular, when selecting these devices, different factors must be taken into consideration, such as:

- the motor power
- the diagram and type of starting
- the type of motor: with cage rotor or with wound rotor
- the fault current at the point of the network where the motor is installed.

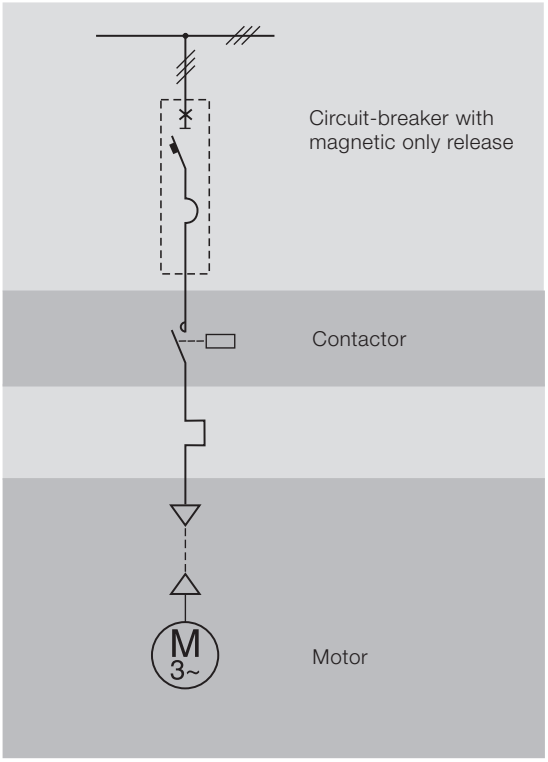

Protection against short-circuit

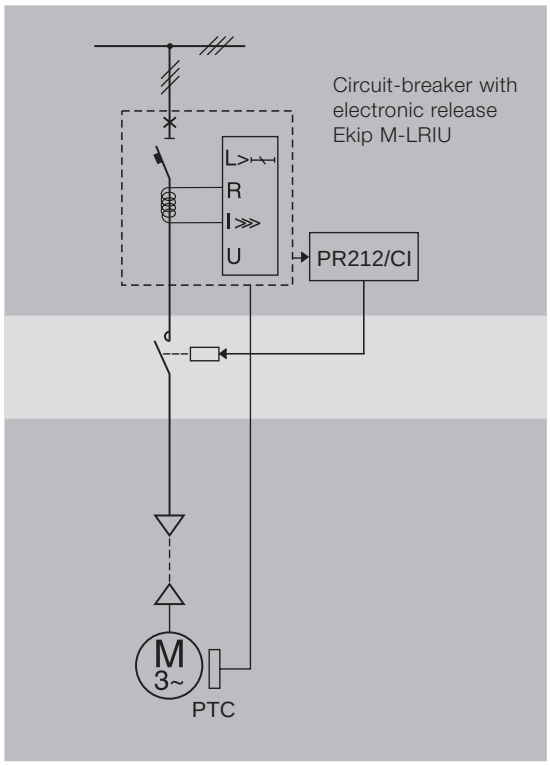

Integrated protection

Integrated protection: Ekip M-LRIU

Circuit-breakers T4, T5 and T6 for motor protection are perfectly integrated with the ABB range of contactors-thermal relays, thereby allowing extremely simple and compact protected start-ups to be obtained.

The three-pole version of T4 and T5 circuit-breakers can be equipped with electronic release Ekip M-LRIU. This allows a large number of specific protections to be obtained, ensuring high trip precision, extremely reliable operation and insensitivity to temperature changes.

The Ekip M-LRIU release guarantees complete motor protection fully integrated into the circuit-breaker. This means that there is no need for an external relay to protect the motor against overloads. Use of the PR212/CI module allows optimized interaction with a contactor, which can be made to open in more frequent fault cases (see Normal / Heavy setting). The breaking capacity of a contactor is definitely lower than the one of a circuit-breaker, but with a number of possible operations consistently higher than those of the breaker (approx. 1,000,000): motor protection and operation are thus optimized when these two devices are used in conjunction with each other.

Protection tripping is guaranteed from single-phase current at 20% of the rated value, while a 24 VDC auxiliary supply must be provided for remote monitoring and supervision of the installation via the modbus communication line. If the circuit-breaker is not integrated into a supervision system, information and settings of the release can still be accessed via the Ekip T&P test and configuration unit. To ensure the motor starts in the best possible way, the electronic release identifies a “start-up” stage from the moment the current exceeds 0.25xIn to when the minimum time of the selected trip class is reached.

User interface

Steady green LEDs:

- **Power on**: it indicates that the release is being energized correctly. The LED comes on when the current exceeds 0.2xIn
- **Protections settings**: it indicates which type of parameters is active (MAN/ELT)

Red LEDs for each LRIU protection:

- **L**: Steady red LED: indicates prealarm for current exceeding 0.9xI1;
- **LRIU**: Flashing red LED: indicates alarm for current exceeding the threshold setting;
- **LRIU**: Steady red LED after trip: shows that the protection has tripped. After the circuit-breaker has opened, you can find out which protection function tripped the release by connecting the Ekip TT or Ekip T&P accessories.

The Ekip M-LRIU release is able to detect whether the opening solenoid is disconnected.Disconnection is signalled by all the LEDs flashing at once.

A socket for connection is available:

- for connecting the Ekip TT trip test unit, which allows the trip and LED tests to be conducted and signals the last trip to have occurred;
- for connecting Ekip T&P which, by means of Ekip Connect software, allows the measurements to be read, the trip test to be performed, conduction of the protection function test and electronic setting of the protection functions of the release and communication parameters.

Communication

Ekip M-LRIU trip unit is enabled for Modbus communication with no need for additional accessories. Connection of 24V DC auxiliary supply is needed to activate the communication function.

Use of the System bus allows you to:

- acquire and transmit a wide range of information by remote control;
- enter the configuration parameter settings (such as current thresholds and protection function curves) and program the unit itself.

Protection functions

The Ekip M-LRIU protection release handles two sets of protection settings at the same time, i.e. a set of electronic parameters (ELT) and a set of manual parameters (MAN). The ELT push-button is used to establish which of the two sets must be used by the release. If the indicator light is on, it means that the protection unit is using the set of electronic parameters, adjustable via the communication system or Ekip T&P unit. If the indicator light is off, it means that the protection unit is using the set of manual parameters, which can be adjusted using the selectors on the front of the relay. The set of manual parameters allows the basic protection functions to be controlled in a very simple way, while the set of electronic parameters allows the more sophisticated protections to be activated and to fine-tune their settings.

ELECTRONIC TRIP UNITS FOR MOTOR PROTECTION

Protection functions - Manual Settings

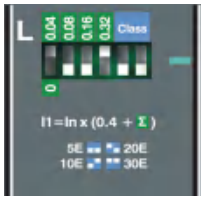

(L) Protection against overload

The L function protects the motor against overloads in accordance with the indications and classes defined by Standard IEC 60947-4-1 and the relative Annex 2.

The trip time is established by choosing the appropriate trip class, which depends on the motor that must be protected. Besides the protection, the thermal memory function (implemented in accordance with Standard IEC60255-8 and the standard mentioned above) is permanently activated. After Ekip M-LRIU trips, the thermal memory is active for a time that depends on the trip class selected (see table). The release will trip faster than the time established for a cold fault condition if a new overload occurs before the thermal memory automatically resets (hot trip condition).

Trip Class	CLASS min	CLASS max	Tmem resetting time
5E	3s	5s	5 min
10E	5s	10s	10 min
20E	10s	20s	20 min
30E	20s	30s	33 min

(R) Protection against rotor blockage

It protects the motor in two different ways, depending on whether the fault occurs on start-up or during the normal operation of an already activated installation. Behaviour in the two operating conditions is defined by Standard IEC 947-4-1 Annex 2.

In the first case (Jam), operation of R protection is designed to protect the motor against rotor jamming during normal operation. So R (Jam) protection function works in conjunction with L protection to ensure motor start-up phase is completed. R (Jam) protection is inhibited during startup for the same time as the minimum time in the selected overload protection trip class. Once this time has elapsed, R protection is activated and causes the circuit-breaker to trip if the current remains above the current threshold setting (I5) for longer than the time (t5) setting of this protection.

In the second case (Stall), the protection is designed to operate in order to protect the motor against rotor jamming upon start-up. If activated by means of the electronic settings, Rstall protection is not inhibited during start-up and causes the circuit-breaker to release if the current remains above the current threshold setting (I8) for longer than the time setting (t8) of that protection.

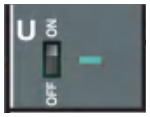

(U) Protection against phase lack and/or unbalance

It can be implemented when the motor must be promptly protected owing to the absence of a phase. The protection trips if the r.m.s. value of at least one of the phase currents drops below the level equal to 0.1 times the rated current of the release and a second phase exceeds 0.25 times the rated current. The circuit-breaker is opened if the current value fails to rise above this level within 2 sec. During start-up, the tripping time of the protection is either 2 sec or half the minimum time of the start-up class, whichever value is lower.

(I) Protection against short-circuit

It guarantees an immediate trip if a short-circuit occurs. It cannot be excluded and its minimum setting is 6 times the rated current of the release. It only needs one phase to exceed the threshold setting for the circuit-breaker to immediately open. To ensure the motor starting sequence terminates correctly, it is inhibited for 0.04 seconds during the start-up phase.

PTC

In its initial configuration, the release is set-up to receive an incoming signal from a PTC sensor installed on the motor. The operating thresholds of the protection are defined in accordance with Standard IEC 60947-8. If the threshold is exceeded, the release opens the circuit-breaker after 1 sec. time-delay. The release has circuits allowing short-circuits in the connection cables of the sensor and open circuit to be detected and signalled. Failure to detect the temperature sensor will automatically inhibit the protection.

Additional Electronic Settings
The settings of further functions is possible in ELT mode only and it can be accessed via Modbus communication or the Ekip T&P test and programming device.

(UN) Protection against phase Unbalance
Used when the motor must be accurately protected against differences among the currents circulating in the phases. Threshold setting I7 defines the maximum level of difference between each phase and the mean value of the three phases. If a phase differs more than its set level from the mean value, the protection opens the circuit-breaker once its time-delay setting (t7) has elapsed. The protection is activated only if all three phase currents exceed 0.25xI1. In start-up phase tripping time is either t7 or half the minimum time of the start-up class, whichever value is lower.

(G) Earth fault protection
Protection function G is designed to trip if faults occur between the phases and earthing conductor. The protection opens the circuit-breaker if the result of the summation of currents circulating in the three phases exceeds threshold setting I4 and remains above this level for time-delay setting t4. G protection is inhibited in start-up phase for the same time as the minimum time in the selected overload protection trip class.

(Uc) Undercurrent protection
This protection function protects the motor from operating in conditions where the load is reduced or null. The circuit-breaker is opened if all the phases remain below threshold setting I9 for delay-time t9..

Interface to contactor
In its initial configuration, the release is set for operation in the Normal mode, activating the contactor by means of the PR212CI module if one of the protections trip (with the exception of protections I and G). If the configuration is changed from Normal to Heavy, the release opens the circuit-breaker directly without having first transmitted the command to the contactor.

Auto-reset function allows the actuation status of the PR212/CI to reset automatically after the contactor has tripped owing to the L function, once an adjustable time from 1 to 1000s has elapsed. Auto-reset can occur only in Normal mode and in presence of auxiliary voltage.

BACK UP function is available and deals with situations whereby an opening command transmitted to the contactor via module PR212CI has not been successful. In this case, the EKIP M-LRIU release sends an opening command to the circuit-breaker after having waited set time Tx.
The actuation time of the contactor given by the manufacturer must be considered when time-delay setting Tx is entered.

ELECTRONIC TRIP UNITS FOR MOTOR PROTECTION

Protection R
Against rotor block

Protection L
Against motor overload

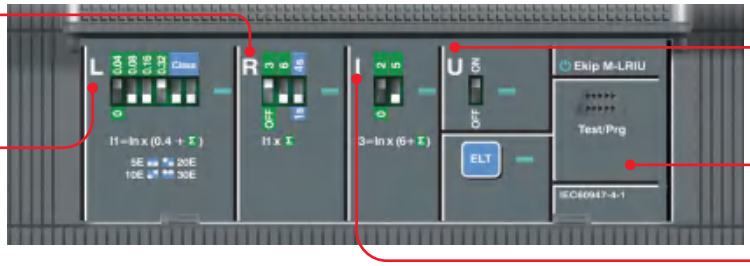

Protection U
Against phase current unbalance or loss of phase

Socket for connection of Ekip T&P testing and programming unit and Ekip TT testing unit

Protection I
Against short-circuit with instantaneous trip

PROTECTION FUNCTIONS AND PARAMETERISATION

Protection functions		Trip threshold	Trip curves (1)	Excludability	t = f(I)	Thermal memory
	Against overload with long inverse time delay trip and trip characteristic according to an inverse time curve according to IEC 60947-4-1 Standard	**Manual setting** I1 = 0.4…1 x In step = 0.04 x In Tolerance: trip between 1.05…1.2xI1	**Manual setting** Trip classes: 5E - 10E - 20E - 30E Tolerance: ± 10% up to 4 x In	–	t = k/I2	according to Standard
		Electronic setting I1 = 0.4…1 x In step = 0.01 x In Tolerance: trip between 1.05…1.2xI1	**Electronic setting** Trip classes: 5E - 10E - 20E - 30E Tolerance: ± 10% up to 4 x In	–	t = k/I2	according to Standard
R	Against rotor block with delayed trip and trip characteristic with definite time (JAM)	**Manual setting** I5 = OFF - 3 - 6 - 9 x I1 Tolerance: ± 15%	**Manual setting** t5 = 1 - 4 s Tolerance: ± 10%	yes	t = k	–
		Electronic setting I5 = OFF - 2…10 x I1 step =1 x I1 Tolerance: ± 15%	**Electronic setting** t5 = 1…10s step = 0.5s Tolerance: ± 10%	yes	t = k	–
	Against rotor block with delayed trip and trip characteristic with definite time (STALL)	**Electronic setting** I5 = OFF - 1…10 x I1 step =1 x I1 Tolerance: ± 15%	Electronic setting t8 = 2…10s step = 0.5s Tolerance: ± 10%	yes	t = k	–
	Against short-circuit with instantaneous trip	**Manual setting** I3 = 6 - 8 -11 - 13 x In Tolerance: ± 15%	≤ 40ms	–	t = k	–
		Electronic setting I3 = 1…13 x In step = 0.5 x In Tolerance: ± 15%	≤ 40ms	–	t = k	–
	Against loss of phase with delayed trip and trip characteristic with definite time	**Manual setting** I6 = ON - OFF Tolerance: ± 15%	**Manual setting** t6 = min 2 s Tolerance: ± 20%	yes	t = k	–
		Electronic setting I6 = ON - OFF Tolerance: ± 15%	**Electronic setting** t6 = 1…10s step 0.5s Tolerance: ± 20%	yes	t = k	–
	Against earth fault with independent time delay trip	**Electronic setting** I4 = OFF – 0.2 … 1 In step 0.1 InTolerance: ± 10%	**Electronic setting** t4 = 0.1 … 0.8 s step 0.1 s Tolerance: ± 10%	yes	t = k	–
UN	Against phase current unbalance with an independent time delay trip	**Electronic setting** I7 = OFF – 20 ... 50% step 10%	**Electronic setting** t7 = 1 ... 10 s step 0.5 s Tolerance: ± 10%	yes	t = k	–
UC	Against undercurrent with an independent time delay triptic	**Electronic setting** I9 = OFF – 50 ... 90% x I1 step 10%	**Electronic setting** t9 = 1 ... 20 s step 0.5 s Tolerance: ± 10%	yes	t = k	–
PTC	Against overtemperature on the motor detected by means of a PTC sensor	**Electronic setting** OFF-ON	**Electronic setting** 1s Tolerance: ± 10%	yes	t = k	–

(1) These tolerances hold in the following conditions:
– self-powered trip unit at full power and/or auxiliary supply (without start-up);
In conditions other than those considered, the following tollerances hold:

	Trip threshold	Trip time
R	± 20%	± 20%
I	± 20%	≤ 50ms
U	± 20%	± 20%

06

ACCESSORIES

6/2 **Execution and installation**

6/4 **Power connection**

6/16 **Signaling**

6/21 **Service releases**

6/26 **Motor Operators**

6/29 **Operating installation mechanism and locks**

6/32 **Accessories for electronic trip units**

6/34 **Installation accessories and spare parts**

6/35 **Compatibility of internal accessories**

EXECUTION AND INSTALLATION

Starting from the fixed version with front terminals, the Tmax circuit-breakers can be converted into the various versions (plug-in for T4 and T5; withdrawable for T4, T5, T6 and T7), using the conversion kits. This makes management of the product, its versions and stocks as a whole very flexible. In any case, it is always possible to request the circuit-breaker in the desired version completely preset in the factory, by ordering, on the same line, the fixed circuit-breaker and the conversion kit, to which must be added the fixed part.
T7 is available in two different versions: the lever operating mechanism version similar to the other sizes in the Tmax family, and the new motorizable version.

Fixed
The Tmax FIXED three-pole or four-pole version circuit-breakers foresee:
- circuit-breakers characterised by just two depths up to 800 A: 103.5 mm for Tmax T4, T5 and T6. For T7 the depth varies according to the type of operating mechanism (with lever or spring charging motor)
- flange for compartment door
- thermomagnetic or electronic trip units
- standard F type (front) on all the Tmax family sizes.

Plug-in
The PLUG-IN version of the circuit-breaker (Tmax T4 and T5) consists of:
- fixed part to be installed directly on the back plate of the unit
- moving part obtained from the fixed circuit-breaker with addition of the isolating contacts (near the connection terminals), of the rear frame (for fixing to the fixed part) and of the terminal covers.

The circuit-breaker is racked out by unscrewing the top and bottom fixing screws. A special lock prevents circuit-breaker racking in and racking out with the contacts in the closed position. In the case where the circuit-breaker has electrical accessories mounted (SOR, UVR, MOE, MOE-E, AUX , AUX-E, AUE, RC222), the socket-plug connectors or the adapters for isolation of the relative auxiliary circuits must also be ordered (see page 5/28).

Withdrawable
The circuit-breakers in the WITHDRAWABLE version (Tmax T4, T5 and T6) are made up of:
- fixed part to be installed directly on the back plate of the unit fitted with lateral guides to allow the moving part racking-in and racking-out operation to be carried out easily, and a dedicated flange for the compartment door to replace the one provided with the circuit-breaker in the fixed version;
- moving part obtained from the fixed circuit-breaker with addition of the relative conversion kit from fixed to withdrawable moving part;
- mandatory accessory to be applied onto the front of the circuit-breaker selected between front for lever operating mechanism (standard supply for circuit-breakers fitted with accessories in the factory) motor operator and rotary handle operating mechanism. Applica-tion of one of these accessories allows the racking-in and racking-out of the moving part with the compartment door closed.

Racking-in and racking-out of the moving part is carried out by means of the special operating lever always supplied with the fixed part. This particular device allows the circuit-breaker to be placed in the isolated position (with power and auxiliary circuits disconnected) with the compartment door closed, to the great advantage of operator safety. The handle can only be inserted with the circuit-breaker open. Once removed or racked-out, the circuit-breaker can be operated in open/closed and, by means of special connection extensions, blank tests can be carried out of the auxiliary control circuit functions. The T4, T5 and T6 circuit-breakers in the withdrawable version can only be fitted with pre-wired electrical accessories, provided with the appropriate ADP adapters for isolation of the relative auxiliary circuits (see page 5/28).

Motorizable
The T7 circuit-breaker in the motorizable version can be equipped with the spring charging motor. To allow a complete remote control with T7 motorizable, the circuit-breaker must be fitted with:
- shunt opening release;
- shunt closing release;
- spring charging motor.

Fixed part - FP
The fixed part, available for all the sizes of the Tmax family, allows the circuit-breaker to be made in the plug-in or withdrawable version. Different positions of the circuit-breaker are possible:
- plug-in: connected, removed;
- withdrawable: connected, removed, racked-out.

With Tmax T4, T5 and T6, fixed parts with dedicated front and rear terminals are available. Moreover, the fixed parts of T4 and T5 with front terminals can also be fitted with the special ES, FC Cu and FC CuAl terminals.

Kit for conversion of fixed part of plug-in into fixed part of withdrawable version
For Tmax T4 and T5 is available a conversion kit which is made up by a guide to prepare the fixed part of the circuit-breaker in the plug-in version in the fixed part of the circuit-breaker in the withdrawable version, a racking-out crank handle and by the flange for the compartment door to replace the one supplied with the fixed or plug-in circuit-breaker version.

Racking-out crank handle
This allows racking-out and racking-in of the circuit-breaker in the withdrawable version into the fixed part, with the door closed. The crank handle is the same for the whole range of circuit-breakers and is automatically supplied with the fixed part of withdrawable circuit-breakers or with the conversion kit for fixed part of plug-in into fixed part of withdrawable version.

T4-T5

Kit for conversion into moving part of plug-in version for T4 - T5
Allows the fixed circuit-breaker with front terminals to be converted into the moving part of a plug-in circuit-breaker. The kit consists of:
- isolating contacts
- anti-racking out safety device
- assembly screws and nuts
- low terminal covers for the moving part.

The fixed part for plug-in version is necessary to complete the circuit-breaker.

T4-T5-T6

Kit for conversion into moving part of withdrawable version for T4 - T5 - T6
Allows the fixed circuit-breaker with front terminals to be converted into the moving part of a withdrawable circuit-breaker. The kit consists of:
- isolating contacts
- frame
- assembly screws and nuts
- low terminal covers for the moving part.

The circuit-breakers in the withdrawable version must always be completed either with the front for lever operating mechanism (standard supply for circuit-breakers fitted with accessories in the factory), rotary handle operating mechanism or motor operator. The fixed part for withdrawable version is necessary to complete the circuit-breaker.

POWER CONNECTION

The basic version circuit-breaker is supplied with front terminals (F).
Different types of terminals, which can be combined together in different ways, are also available (top of one type, bottom of a different type), thereby allowing the circuit-breaker to be connected to the plant in the most suitable way in relation to installation requirements.
The following can be distinguished:

- front terminals which allow connection of cables or busbars working directly from the front of the circuit-breaker
- orientated rear terminals which allow installation of the circuit-breakers in switchboards with rear access to both the cable and busbar connections.

Terminals are available for direct connection of bare copper or aluminium cables and terminals for connection of busbars or cables with cable lugs.
On page 5/6 and following, the information needed to make the connections for each type of terminal is summarised. For connection with bare cables, the minimum and maximum cross-sections of the cables, which can be clamped in the terminals, the type of cables (rigid or flexible) and the diameter of the terminal are indicated. For connections with busbars, flat terminals of different sizes and composition are recommended.
The torque values to be applied to the tightening screws of the terminals for cables and to the screws used to connect the busbars to the flat terminals are indicated.
The circuit-breakers can be ordered complete with the terminals required (mounted directly in the factory), by associating the terminal kit codes with the code of the standard version circuit-breaker, or the terminals can be ordered individually in packs of 3 - 4 - 6 or 8 pieces.
To receive the circuit-breaker with mixed terminals, the two terminal half-kits must be specified, loading the one to be mounted on top as the first half-kit and then the one to be mounted below.
If the top terminals are the same as the bottom ones, it is compulsory to order the complete kit (6 or 8 pieces) and not the two half-kits: the configuration would not be accepted by the system.

Insulating terminal covers
The terminal covers are applied to the circuit-breaker to prevent accidental contact with live parts and thereby guarantee protection against direct contacts. The following are available:

- low terminal covers (LTC): these guarantee IP30 degree of protection for fixed circuit-breakers with rear terminals and for moving parts of plug-in and withdrawable circuit-breakers
- high terminal covers (HTC): these guarantee IP40 degree of protection, for fixed circuit-breakers with front, front extended, front for cables terminals.
- For fixed parts of T4 and T5, the proper terminal covers (TC-FP) are available.

The degrees of protection indicated at page 6/3 are valid for the circuit-breaker installed in a switchboard.

Phase separators
These allow the insulation characteristics between the phases at the connections to be increased. They are mounted from the front, even with the circuit-breaker already installed, inserting them into the corresponding slots and they are available in two versions:

- 100 mm high
- 200 mm high.

The H=100 mm phase separators are supplied as compulsory with front extended type terminals (EF) except for T4 P-W and T6, whereas the ones with height H=200 mm are compulsory with front extended spread type terminals (ES).
The phase separating partitions are incompatible with both the high and low insulating terminal covers.
The fixed parts can use the same phase separating partitions as the corresponding fixed circuit breakers.
It is possible to mount the phase separating partitions between two circuit-breakers or fixed parts side by side.

Screws for sealing the terminal covers
These are applied to the terminal covers of fixed circuit-breakers or to the moving parts of plug-in or withdrawable circuit-breakers. They prevent removal of both the high and low terminal covers and can be locked with a wire and lead seal.

Kit for taking up the auxiliary power supply
Special kits are available with the fixed version of Tmax T2, T3, T4 and T5 circuit-breakers for taking up the auxiliary power supply directly from the connection terminals. They can only be combined with the front terminals for copper cables (FC Cu) for T2, T3 and T4 or with the front terminals (F) for T4-T5.

Power connection

Power connection for AC distribution

CIRCUIT-BREAKER

	F	EF	ES	FC Cu	FC CuAl	FC CuAl	MC	RC CuAl	HR	VR	HR for RC221/222	R
	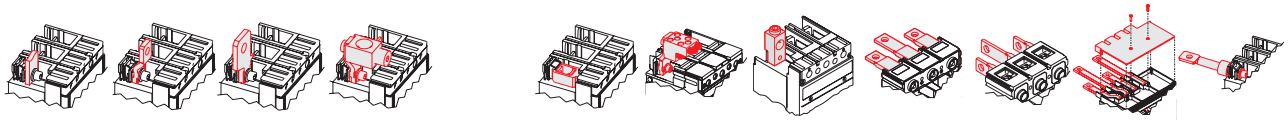											
	Front terminals	Front extended terminals	Front extended spread terminals	Front terminals for copper cables	Front terminals for CuAl cables	Front terminals for CuAl cables (1)	Multi-cable terminals	Rear terminals for CuAl cables	Rear flat horizontal terminals	Rear flat vertical terminals	Rear flat horizontal terminals	Rear horizontal terminals
T4	F (2)	F	F	F	F	F	F					F
T5	F (2)	F	F	F	F	F						F
T6 630	F (2)	F	F		F			F				F
T6 800	F (2)	F	F			F		F				F

(1) Housed externally
(2) Standard supply
F = Fixed

FIXED PART

	F	EF	ES	FC Cu	FC CuAl	FC CuAl	R	RS	HR	VR	HR/VR
	Front terminals	Front extended terminals	Front extended spread terminals	Front terminals for copper cables	Front terminals for CuAl cables	Front terminals for CuAl cables (1)	Rear horizontal terminals	Rear spreaded terminals	Rear flat horizontal terminals	Rear flat vertical terminals	Rear flat terminals
T4		P-W		P-W	P-W				P-W	P-W	
T5		P-W	P (2)-W (2)	P-W	P-W				P-W	P-W	
T6		W							W	W	

(1) Housed externally
(2) For T5 630 only
P = Plug-in
W = Withdrawable

FRONT TERMINALS - F

Allow connection of busbars or cables terminated with cable terminal.

Type	Version	Pieces	Busbars/cable terminal [mm]				Tightening [Nm]	Terminal covers			Phase separators
			W	H	D	Ø		high	low	fixed part	
T4	F	1	25	9.5	8	8.5	18	R	R	–	R
T5	F	1	35	11	10 (1)	10.5	28	R	R	–	R
T6 630	F	2	40	12	5	2x7	9	R	R	–	R
T6 800	F	2	40	12	5	2x7	9	R	R	–	R

(1) minimum 5 mm

FRONT EXTENDED TERMINALS - EF

Allow connection of busbars or cables terminated with cable terminal.

Type	Version	Pieces	Busbars [mm]			Cable terminal [mm]		Tightening [Nm]		Terminal covers			Phase separators
			W	D	Ø	W	Ø	A	B (1)	high	low	fixed part	
T4	F	1	20	10	10	20	10	18	18	R	–	–	S
	P-W	1	20	10	8	20	8	–	9	–	–	R	R
T5	F	2	30	7	11	30	11	28	18	R	–	–	S
	P-W	2	30	15	10	30	10	–	18	–	–	R	R (7)
T6 630	F-W	2	40	5	11 (2)	40	11 (2)	9	18	R	R	–	R
T6 800	F-W	2	50	5	14	50	14	9	30	–	R	–	R

(1) class 4.8 screws (not supplied)
(2) 14 mm for W
(4) only use two holes diagonally
(5) 12 Nm onto fixed part of withdrawable circuit-breaker
(6) class 8.8 screws (not supplied)
(7) Standard for T5 630

FRONT EXTENDED SPREAD TERMINALS - ES

Allow connection of busbars or cables terminated with cable terminal.

Type	Version	Pieces	Busbars [mm]			Cable terminal [mm]		Tightening [Nm]		Terminal covers			Phase separators
			W	P	Ø	W	Ø	A	B (1)	high	low	fixed part	
T4	F	1	20	6	10.5	30	10.5	18	18	–	–	–	S
T5	F- P (2)-W (2)	1	40	10	11	11	11	18	18	–	–	–	S
T6	F-W	1	80	5	3x13	3x45	13	9	30	–	–	–	–

(1) class 4.8 screws (not supplied)
(2) for T5 630 only

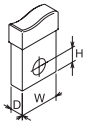

A = Tightening the terminal onto the circuit-breaker
B = Tightening the cable/busbar onto the terminal
R = On request
S = Standard
Pieces = Number of busbars, cables or cable terminals

Power connection

FRONT TERMINALS FOR COPPER CABLES - FC CU

Allow connection of bare copper cables directly to the circuit-breaker.

Type	Assembly	Version	Pieces	Cable [mm²]		Flexible busbars	Tightening [Nm]		Ø [mm]	Terminal covers			Phase separators
				rigid	flexible	W x S x N [1]	A	B		high	low	fixed part	
T4	standard	F-P-W	1	2.5...185	2.5...120	15.5x0.8x10	–	10	18	R	R	S	R
	standard	F-P-W	2	–	2.5...95	–	–	10	18	R	R	S	R
T5	standard	F-P-W	1	16...300	16...240	24x1x10	–	25	28	R	R	S	R
	external	F	2	120...240	–	–	18	25	–	S	–	–	–

[1] W = width; S = thickness; N = n. of bars

FRONT TERMINALS FOR COPPER/ALUMINIUM CABLES - FC CUAL

Allow connection of bare copper or aluminium cables directly to the circuit-breaker (solid aluminium cables cannot be used).

T4-T5 Standard

T4-T5 External

T6-T7

Type	Assembly	Version	Pieces	Cable [mm²]	Tightening [Nm]		Ø [mm]	Terminal covers			Phase separators
				rigid	A	B		high	low	fixed part	
T4	standard	F-P-W	1	6...185	9	31	18	R	R	S	R
	external	F	2	35...150	18	16	18	S	–	S	–
	external	F	1	150...240	18	40	24	S	–	–	–
	standard	F	1	2.5...50	9	5.6	9.9	R	R	R	R
T5	external	F-P-W	1	120...240	18	43	21.5	R	R	R	S
	standard	F-P-W	1	185...300	18	43	24.5	R	R	S	R
	external	F	2	95...240	18	31	24.5	S	–	S	–
	external	F	2	95...120	18	31	–	S	–	–	R
T6 630	standard	F	2	120...240	5	31	21.5	R	–	–	R
T6 800	external	F	3	70...185	9	43	19	S	–	–	–

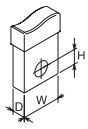

A = Tightening the terminal onto the circuit-breaker
B = Tightening the cable/busbar onto the terminal
R = On request
S = Standard
Pieces = Number of busbars, cables or cable terminals

MULTI-CABLE TERMINALS - MC

Allow connection of cables directly to the circuit-breaker.

Type	Version	Pieces	Cable [mm²]		Tightening [Nm]		Terminal covers			Phase separators
		max	flexible	rigid	A	B	high	low	fixed part	
T4	F	6	2.5...25	2.5...35	18	7	S	–	–	–
T5	F	6	–	16...50	18	5	S	–	–	–

REAR TERMINALS FOR COPPER/ALUMINIUM CABLES - RC CUAL

Allow connection of bare copper or aluminium cables directly to the circuit-breaker.

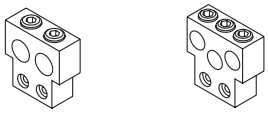

Type	Version	Pieces	Cable	Tightening [Nm]		Ø [mm]	Terminal covers	
			rigid	A	B		high	low
T6 630	F	2	150...240	9	43	21	S	–
T6 800	F	3	70...185	9	31	17.5	S	–

REAR TERMINALS - R

Allow connection of busbars or cable terminal at the rear. They can be installed in 4 different positions to facilitate connection to cable/busbars.

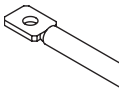

Type	Version	Pieces	Busbars [mm]			Tightening [Nm]		Terminal covers		Phase separators
			W	D	Ø	A	B(1)	high	low	
T4	F	1	20	10	8.5	6	9	–	S	–
T5	F	2	30	7	11	18	18	–	S	–
T6 630	F	2	40	5	14	18	30	–	S	–
T6 800	F	2	50	5	14	18	30	–	S	–

(1) class 8.8 screws (not supplied)

REAR FLAT HORIZONTAL AND VERTICAL TERMINALS FOR FIXED PARTS - HR/VR

These allow connection of busbars or cable terminals at the rear. There are rear horizontal or vertical terminals.

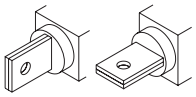

Type	Version	Pieces	Busbars [mm]			Cable terminal [mm]		Tightening [Nm]		Terminal covers			Phase separators
			W	D	Ø	W	Ø	A	B(1)	high	low	fixed part	
T4	P - W	1	20	10	9	20	9	6	18	–	–	–	–
T5 400	P - W	1	25	10	11	25	11	9	18	–	–	–	–
T5 630	P - W	2	40	15	11	40	11	–	18	–	–	–	–
T6 630	W	2	40	5	14	40	14	–	30	–	–	–	–
T6 800	W	2	50	5	14	50	14	–	30	–	–	–	–

(1) class 4.8 screws (not supplied)

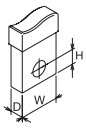

A = Tightening the terminal onto the circuit-breaker
B = Tightening the cable/busbar onto the terminal
R = On request
S = Standard
Pieces = Number of busbars, cables or cable terminals

Power connection

Circuit Breakers and switch disconnectors for DC applications >1000V DC - IEC

TMAX PV SWITCH-DISCONNECTORS UP TO 1100V DC IN COMPLIANCE WITH IEC60947-3

Configuration & Supply		EF	FCCu	FCCuAl	HR	ES	F
Size							
T4D/PV	2+2 - lower 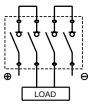	●	●	●			●
	2+2 - upper 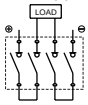	●	●	●			●
	4PS - lower 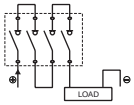	●	●	●			●
	4PS - upper 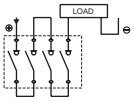	●	●	●			●
T5D/PV	2+2 - lower 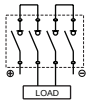	●	●				●
	2+2 - upper 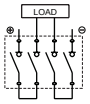	●	●				●
	4PS - lower 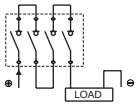	●	●				●
	4PS - upper 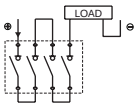	●	●				●

TMAX PV SWITCH-DISCONNECTORS UP TO 1100V DC IN COMPLIANCE WITH IEC60947-3

Configuration & Supply		EF	FCCu	FCCuAl	HR	ES	F
		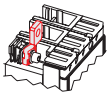	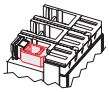	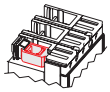	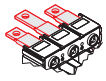	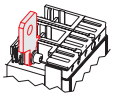	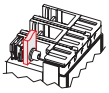
Size							
T6D/PV	2+2 - lower 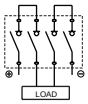	●		●			●
	2+2 - upper 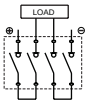			●			●
	4PS - lower 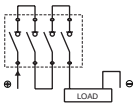	●		●			●
	4PS - upper 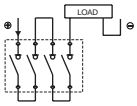			●			●
T7D/PV	2+2 - lower 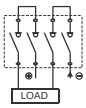	●		●	● 1)	●	●
	2+2 - upper 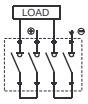	●		●			●
	4PS - lower 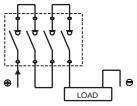	●		●		●	●
	4PS - upper 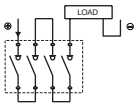	●					●

1) Vertical (VR) terminals can be used too

Power connection

Circuit Breakers and switch disconnectors for DC applications >1000V DC - IEC

TMAX PV SWITCH-DISCONNECTORS AND CIRCUIT-BREAKERS UP TO 1500V DC IN COMPLIANCE WITH IEC60947-2 AND IEC60947-3

Configuration & Supply		FCCu	FCCuAl	F[3]
Size				
T4D/PV-E **T4N/PV-E** 	2+2 - lower 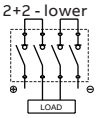	●	●	●
	2+2 - upper 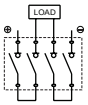	● [2]	● [2]	● [2]
	4PS - lower 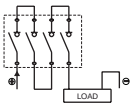	●	●	●
	4PS - upper 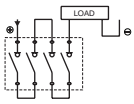	● [2]	● [2]	● [2]
T5D/PV-E 	2+2 - upper 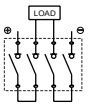	●		●
T7D/PV-E 	2+2 - upper 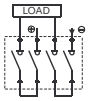		●	●
	2+2 - lower 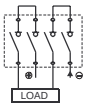		● [1]	● [1]
	4PS - lower 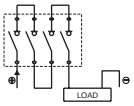		● [1]	● [1]

1) Valid only when 1250 A jumpers are used
2) Not valid for T4N/PV-E 250
3) Not valid for T4N/PV-E

TMAX PV SWITCH-DISCONNECTORS AND AUTOMATIC CIRCUIT-BREAKERS UP TO 1000V DC IN COMPLIANCE WITH UL 489B

Configuration & Supply		EF	FCCu	FCCuAl	ES	F
		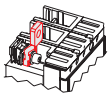	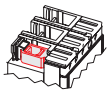		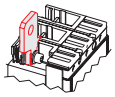	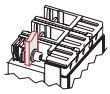
Size						
T4N-D/PV - T4N/PV	2+1 - lower 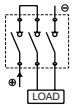			● 1)		
	3PS - lower 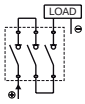			● 1)		
	3PS - upper 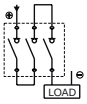			● 1)		
T5N-D/PV - T5N/PV	2+1 - lower 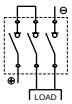		● 2) 4)	● 3) 4)	● 5)	
	3PS - lower		● 2) 4)	● 3) 4)	● 5)	
	3PS - upper 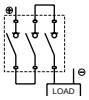		● 2) 4)	● 3) 4)	● 5)	
T6N-D/PV - T6N/PV	2+2 - lower 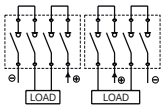	● 5)		● 4)		
	4PS - lower 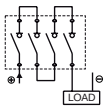	● 5)		● 4)		

1) Included with jumpers kit
2) T5 300-400A only
3) T5 225-250A only
4) Included with jumper kit "cable type"
5) Included with jumper kit "busbar type"

Power connection

Circuit Breakers and switch disconnectors for DC applications >1000V DC - UL

TMAX PV SWITCH-DISCONNECTORS UP TO 1500V DC IN COMPLIANCE WITH UL 489B

Configuration & Supply		EF	FCCu	FCCuAl	ES	F
Size						
T7N-D/PV	2+2 - lower 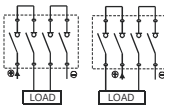			● 3)		● 4)
	2+2 - upper 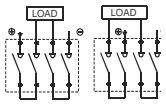			● 3)		● 4)
	4PS - lower 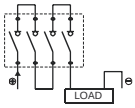			● 3)		● 4)
	4PS - upper 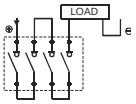			● 3)		● 4)
T7N-D/PV-E	2+2 - lower 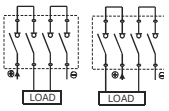	● 1) 5)		● 2) 3)		● 2) 4)
	2+2 - upper 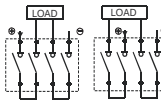	● 1) 5)		● 2) 3)		● 2) 4)
	4PS - lower 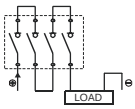	● 1) 5)		● 2) 3)		● 2) 4)
	4PS - upper 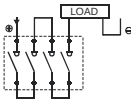	● 1) 5)		● 2) 3)		● 2) 4)

1) Mandatory for T7 1200A
2) T7 1000A only
3) Included with jumper kit "cable type"
4) Included with jumper kit "busbar type"
5) Included with jumper kit

Power connection

Circuit breaker for AC applications ≥800V AC

TMAX T-HA FOR APPLICATIONS UP TO 800VAC IEC

Wire options Tmax T4 and T5		
Ambient temp.		**40°C**
Cable type	**Copper**	**Aluminum**
In (A)		**required wires (number x section)**
T4		
80	1 x 25mm²	1 x 35mm²*
100	1 x 35mm²	1 x 50mm²*
125	1 x 50mm²	1 x 70mm²*
160	1 x 70mm2	1 x 120mm²*
200	1 x 95mm²	1 x 150mm²*
250	1 x 150mm²	1 x 185mm²*
T5		
320	1 x 185mm²	2 x 120mm²*
400	1 x 240mm²	2 x 150mm²*
500	2 x 150mm²*	2 x 240mm²*
630	2 x 185mm²*	Lug not available

*with FcCuAL

TMAX T-HA FOR APPLICATIONS UP TO 800VAC UL

Wire options Tmax T4 and T5		
Ambient temp.		**40°C**
Cable type	**Copper**	**Aluminum**
In (A)		**required wires (number x section)**
T4V		
80	1 x 4 AWG	1 x 2 AWG
100	1 x 3 AWG	1 x 1 AWG
125	1 x 1 AWG	1 x 2/0 AWG
150	1 x 1/0 AWG	1 x 3/0 AWG
200	1 x 3/0 AWG	1 x 250kcmil
T5V		
300	1 x 350kcmil	1 x 500kcmil

SIGNALLING

These allow information on the operating state of the circuit-breaker to be taken outside.
Installation of these accessories is carried out directly from the front of the circuit-breaker in special slots placed on the right-hand side of the circuit-breaker, completely segregated from the live parts - all to the benefit of user safety. The auxiliary contacts can be supplied (depending on the type) either in the version with cabling to be carried out by the customer by means of connection to the terminals integrated in the auxiliary contacts, or with cabling directly on the circuit-breaker terminal board or in the pre-cabled version, depending on the size of the circuit-breaker fitted with free cables 1 m long, with a connector with 1 m long cables. The pre-cabled version is mandatory on the T4, T5 and T6 circuit-breakers in the withdrawable version. The auxiliary contacts for T7 are always fitted with three terminals to be mounted in the terminal board to carry out the cabling. The auxiliary contacts are available for use both in direct and alternating current at various voltages. The signals are reset when the circuit-breaker is reset.

AUX - 250 V AC/DC

T4-T7 (AUX)
Available both in the pre-cabled and uncabled version, they supply the following electrical signalling:
- open/closed: indicates the position of the circuit-breaker contacts (Q)
- release trip: signals circuit-breaker opening due to overcurrent release trip (for overload or short circuit), trip of the residual current release, of the opening coil or of the undervoltage release, of the emergency opening pushbutton of the motor operator or two to operation of the test pushbutton (SY)
- contact for signalling electronic trip unit tripped: signals intervention of one of the protection functions of the electronic trip unit (S51).

The auxiliary contacts for T7 are always fitted with terminals to be mounted in the terminal box to carry out wiring.

AUX-C - 250 V AC/DC

T4, T5, T6 and T7 with electronic trip units (AUX-SA)
There is a contact for signalling electronic trip units tripped, only available in the pre-cabled version for use at 250 V AC.

T4, T5 and T6 (AUX-MO)
This auxiliary contact, only in the cabled version, must necessarily be combined with the motor operator and indicates the motor operation mode (manual or remote).

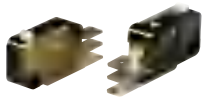

T7

T7 (AUX-RTC)
The “circuit-breaker ready to close” auxiliary contact is available with wiring directly on the terminal box of the T7 circuit-breaker with stored energy operating mechanism and signals that the circuit-breaker is ready to accept a closing command if there are the following five conditions:
- circuit-breaker open
- closing springs charged
- any opening coil de-energised
- any undervoltage coil energised
- opening solenoid armed.

T7 (AUX-SC)
Indicates the state of the circuit-breaker operating mechanism closing springs remotely (supplied only with the spring charging motor).

T4, T5 and T6 with PR222DS/PD, PR223DS,and Ekip E-LSIG electronic trip
Only available in the pre-cabled version, the auxiliary contacts AUX-E (also called electronic version contacts) communicate the state of the circuit-breaker to the electronic trip unit and make an open/closed signal available to the outside and another one for electronic trip unit tripped.
They can only be combined with the PR222DS/PD, PR223DS or Ekip E-LSIG electronic trip unit and only function when there is a 24 V DC auxiliary power supply to the trip unit for the communication functions.
The AUX-E contacts can, moreover, be directly connected to the MOE-E motor operator (see page 5/26).

The “traditional” version of the auxiliary contacts can also be combined with the protection trip units with dialogue; in this case, only electrical signalling of the state of the circuit-breaker will be provided and it will not be possible to communicate remotely or control the motor.

SIGNALLING

AUX - ELECTRICAL CHARACTERISTICS

AUX 250 V - T4...T6		
Power supply voltage		**Service current**
		Category of utilisation (IEC 60947-5-1)
	AC 14	**DC 13**
125 V	6 A	0.3 A
250 V	5 A	0.15 A
Protection with gG 10x38 type fuse (Imax 6 A)		

AUX 400 V - T4...T7		
Power supply voltage		**Service current In [A]**
	AC	**DC**
125 V	–	0.3
250 V	12(1)	0.15
400 V	3	–

(1) 5 A for Tmax T7

AUX 24 V - T4...T7		
Power supply voltage		**Service current In [A]**
	AC	**DC**
24 V	–	≥ 0.75 mA
5 V	–	≥ 1 mA

AUX-E - T4...T6	
Typical contact	Mosfet
Vmax	48 V DC/30 V AC
Rmax	35 ohm
Pmax (resistive load)	200 mW
System contact/earth insulation	2000 V AC (1 min. @ 50 Hz)
Contact/contact insulation	400 V DC

TABLE OF THE POSSIBLE COMBINATIONS OF THE T7-T7M AUXILIARY CONTACTS

T7	SY	Q1			1Q + 1SY
			Q2	Q3	2Q
	SY	Q1	Q2	Q3	3Q + 1SY

T7M			Q2	Q3	2Q
	Q4	Q1			2Q
	Q4	Q1	Q2	Q3	4Q

TYPES OF AUXILIARY CONTACTS

		Version	**T4**	**T5**	**T6**	**T7**
AUX 400 V AC	1 open/closed changeover contact + 1 release tripped changeover contact	pre-cabled	●	●	●	●
AUX 400 V AC	2 open/closed changeover contacts	pre-cabled	●	●	●	●
AUX 24 V DC	1 open/closed changeover contact + 1 release tripped changeover contact	pre-cabled				●
AUX 24 V DC	2 open/closed changeover contacts	pre-cabled				●
AUX 24 V DC	3 open/closed changeover contacts + 1 release tripped changeover contact	pre-cabled/ not cabled	●	●	●	
AUX-SA 250 V AC	1 SA electronic release trip contact	pre-cabled	●	●	●	●
AUX-MO	1 contact signalling manual/remote	not cabled	●	●	●	
AUX-RTC 24 V DC	1 contact signalling ready to close	pre-cabled				●
AUX-RTC 250 V AC/DC	1 contact signalling ready to close	pre-cabled				●
AUX-SC 24 V DC	1 contact signalling closing springs charged	pre-cabled				●
AUX-SC 250 V AC/DC	1 contact signalling closing springs charged	pre-cabled				●
AUX-E	1 open/closed contact + 1 release tripped contact (only with PR222DS/PD, Ekip E and PR223DS)	pre-cabled	●	●	●	

Testing extension for auxiliary contacts
Available for Tmax T4, T5 and T6 circuit-breakers, this allows the auxiliary contacts to be connected to the relative power supply circuit with the circuit-breaker in the removed position. With the circuit-breaker in a safe position, i.e. isolated in relation to the power circuits, it is possible to carry out blank function tests of the circuit- breaker.

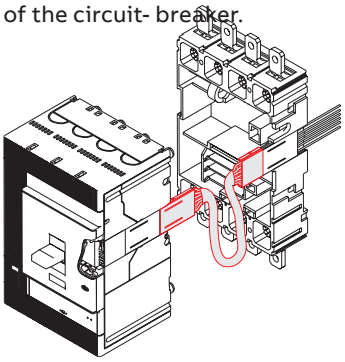

Early auxiliary contacts – AUE
Normally open contacts, advanced in relation to closing (2 contacts for all the sizes, except for T7 where there are 3). They allow the undervoltage release to be supplied in advance, in relation to closing of the main contacts, in compliance with the IEC 60204-1 and VDE 0113 Standards. They are mounted inside the direct and transmitted rotary handle operating mechanism, whereas on T7 with lever operating mechanism, they are mounted directly on the circuit-breaker. The early contacts are only supplied in the cabled version with 1 m long cables, with socket-plug connectors with 1 m. cables for T4, T5 and T6. It is necessary to bear in mind that the connectors for T4, T5 and T6, once inserted in the special slot on the left-hand side of the circuit-breaker, extend in relation to the outline of the circuit-breaker itself. The early auxiliary contacts for T7 are always fitted with 3 terminals to be mounted in the terminal board to carry out the cabling.

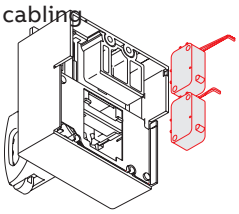

Auxiliary position contacts – AUP
With Tmax circuit-breakers, auxiliary position contacts which provide electrical signalling of the circuit-breaker position in relation to the fixed part are available. The following auxiliary position contacts are available:
T4 - T5 - T6
- circuit-breaker racked-in signalling contacts for plug-in and withdrawable versions
- circuit-breaker racked-out signalling contacts only for withdrawable version
- circuit-breaker racked-in signalling contacts for plug-in and withdrawable versions 24 V DC
- circuit-breaker racked-out signalling contacts only for withdrawable version 24 V DC.

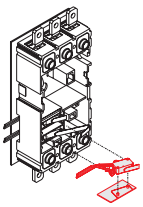

T4-T5

SIGNALLING

A maximum of three contacts can be installed on the fixed part of T2, T3, T4 and T5, whereas up to five auxiliary contacts can be mounted on the fixed part of T6 in all the combinations (for T4 and T5, in the withdrawable version, only one contact for signalling circuit-breaker racked-out can be housed in the compartment closest to the bottom terminals).
The auxiliary contacts for T7 are inserted in a single block consisting of two contacts for signalling racked-in, two for isolated-test and two for racked-out.

Trip reset
Available on T7 in the version with possibility of motorisation, this is a coil which allows remote circuit-breaker resetting following a trip of the overcurrent releases. It is available with two power supply voltages: 24...30 V AC/DC, 110...127 V AC/DC and 200...240 V AC/DC.

Version	Inrush power consumption	
	AC [VA]	DC [W]
24...30 V	90	90
110...127 V	70	70
200...240 V	65	65

Mechanical operation counter
Available on T7 motorizable, it is connected to the operating mechanism by means of a simple lever mechanism. It indicates the number of circuit-breaker mechanical operations. The indication is visible from the outside on the front of the circuit-breaker.

SERVICE RELEASES

The Tmax family of circuit-breakers can be fitted with service releases (shunt opening release, shunt closing release and undervoltage release). These are available in the pre-cabled version, depending on the size of the circuit-breaker fitted with 1 m long free cables, with a connector with 1 m cables or with a simple pin connector and two terminals to be mounted in the terminal board, or in the uncabled version, with cabling to be carried out by the customer.
Assembly is carried out for all the releases by pressing into the special seat in the left part of the circuit-breaker (right for T7) and fixing with the screw provided.
For T4, T5 and T6 in the four-pole version the shunt opening release (not possible with PS-SOR) and the undervoltage release can be housed at the same time, as long as they are in the wired version and with the shunt opening release necessarily mounted in the slot of the third pole. T4, T5, T6 circuit-breakers in the withdrawable version can be equipped only with pre-cabled accessories; the T4-T5-T6 circuit-breakers complete with motorized controls can only be fitted with prewired undervoltage and shunt opening releases.
The T7 circuit-breaker allows simultaneous mounting of all three service releases. These two possibilities are available on the three-pole version as well. Moreover Tmax T7 can be equipped with two shunt opening releases instead of the undervoltage release to facilitate some specific applications where a very high safety level of the remote circuit-breaker opening command is required.
If there is only a service release installed in a T4, T5 or T6 in four poles version, the dedicated slot is the one on the left hand side, close to the operating toggle.

T4-T5-T6

T7

Shunt opening release – SOR
Allows circuit-breaker opening by means of an electric command. Operation of the release is guaranteed for a voltage between 70% and 110% of the rated power supply voltage value Un, both in alternating current and in direct current. For Tmax T1, T2, T3, T4, T5 and T6, the SOR shunt opening release is fitted with a limit contact for cutting off the power supply in the open position and with the release tripped.

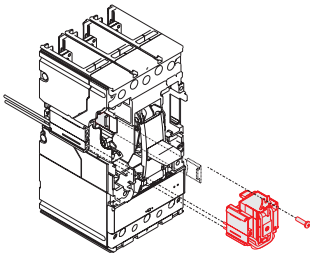

T4-T5-T6

SERVICE RELEASES

SOR - ELECTRICAL CHARACTERISTICS

Version				Inrush power consumption
		Tmax T4, T5, T6		Tmax T7
	AC [VA]	DC [W]	AC [VA]	DC [W]
12 V DC		150		
24 V AC/DC			430	430
24...30 V AC/DC	150	150		
30 V AC/DC			300	300
48 V AC/DC			300	300
48...60 V AC/DC	150	150		
60 V AC/DC			300	300
110...120 V AC/DC			300	300
120...127 V AC/DC			300	300
110...127 V AC - 110...125 V DC	150	150		
220...240 V AC/DC			300	300
220...240 V AC - 220...250 V DC	150	150		
240...250 V AC/DC			300	300
380...400 V AC			300	
380...440 V AC	150			
415...440 V AC			300	
480...525 V AC	150			
Opening time [ms]	15	15	50	50

Shunt opening release with permanent service – PS-SOR

Furthermore, for T4, T5 and T6, opening coils with permanent service (PS-SOR) are available, with much lower power consumption and which can be supplied continuously: in this case, in fact, they are not fitted with auxiliary limit contact. The pre-cabled or uncabled version can be chosen for these coils as well.

PS-SOR - ELECTRICAL CHARACTERISTICS

Version		Tmax T4, T5, T6
	AC [VA]	DC [W]
24 V AC/DC	4	4
110...120 V AC	4	–

Opening and closing release test unit - YO/YC Test Unit

On Tmax the opening and closing release test unit helps ensure that the various version of releases are running smoothly, to guarantee a high level of reliability in controlling circuit-breaker opening and closing (T7 only). The test unit ensures the continuity of the opening and closing (T7 only) releases with a rated operating voltage between 24V and 250V (AC and DC), as well as verifies the functions of the opening and closing coil electronic circuit. YO/YC test unit is not compatible with permanently supplied releases. Continuity is checked cyclically with an interval of 20s. The unit has optic signals via LEDs on the front, which provide the following information:

- **POWER ON:** power supply present
- **TESTING:** testing in progress
- **TEST FAILED:** signal following a failed test or lack of auxiliary power supply
- **ALARM:** signal given following three failed tests.

Two relays with one change-over are also available on board the unit, to allow remote signalling of the following events:

- Failure of a test - resetting takes place automatically when the alarm stops
- Failure of three tests - resetting occurs only by pressing the manual RESET on the unit.

Characteristics of devices	
Auxiliary power supply	24 V...250 V AC / DC
Specifications of the signalling relays	
Maximum interrupted current	6 A
Maximum interrupted voltage	250 V AC

T7

Shunt closing release – SCR

The shunt closing release - only available on the motorizable versions of Tmax T7 - allows remote closure of the circuit-breaker when the circuit-breaker closing springs are charged. The technical characteristics and the service voltages of the shunt closing release are identical to those of the shunt opening release available on T7. The closing time of the circuit-breaker by means of SCR is 50 ms.

Thanks to the anti-surge system, the closure of the circuit-breaker is not possible before the opening operation has entirely been performed. Thus a delay of at least 30 ms between the opening and closing command is required.

Undervoltage release – UVR

Opens the circuit-breaker due to lack of release power supply voltage or to drops to values under 0.7 x Un with a trip range from 0.7 to 0.35 x Un. After tripping, the circuit-breaker can be closed again starting from a voltage higher than 0.85 x Un. With the undervoltage release de-energised, it is not possible to close the circuit-breaker or the main contacts.

SERVICE RELEASES

T4-T5-T6

T7

UVR - ELECTRICAL CHARACTERISTICS UVR T4...T6

Version	Power consumption during permanent operation Tmax T4, T5, T6	
	AC [VA]	DC [W]
24 V AC/DC		
24...30 V AC/DC	6	3
30 V AC/DC		
48 V AC/DC	6	3
60 V AC/DC	6	3
110...127 V AC - 110...125 V DC	6	3
220...240 V AC - 220...250 V DC	6	3
380...440 V AC	6	
480...525 V AC	6	
Opening times [ms]	≤ 30	≤ 30

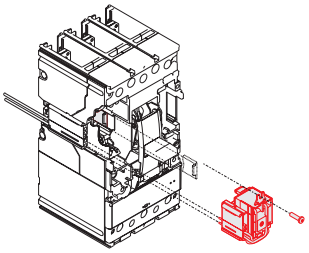

T4-T5-T6

UVR - ELECTRICAL CHARACTERISTICS UVR T7

Characteristics		
Power supply (Un)	24 V AC/DC	240-250 V AC/DC
	30 V AC/DC	380-400 V AC
	48 V AC/DC	415-440 V AC
		60 V AC/DC
		110-120 V AC/DC
		120...127 V AC/DC
		220...240 V AC/DC
Operating limits		IEC EN 60947-2 Standards
Inrush power (Ps)		DC = 300 W
Inrush time ~ 100 ms		AC = 300 VA
Continuous power (Pc)		DC = 3.5 W
		AC = 3.5 VA
Opening time (UVR)		30 ms
Insulation voltage		2500 V 50 Hz (for 1 min)

Time delay device for undervoltage release – UVD

The undervoltage release (UVR) can be combined with an external electronic power supply time delay device, which allows circuit-breaker opening to be delayed in the case of a drop or failure in the power supply voltage of the release itself, according to preset and adjustable delays, in order to prevent unwarranted trips caused by temporary malfunctions. The delay device must be combined with an undervoltage release with the same corresponding voltage.

Two time delay devices with the same characteristics are available. For T4-T6 a time delay device which can be combined also with Tmax T1-T2-T3 circuit-breakers is available. The time delay device for Tmax T7 is the one already available on the Emax ranges.

UVD

Circuit-breaker	Power supply voltage [V AC/DC]
T4...T6	24...30
T4...T6	48...60
T4...T6	110...125
T4...T6	220...250
Delay which can be set [s]	0.25 - 0.5 - 0.75 - 1 - 1.25 - 2 - 2.5 - 3
Trip time tolerance	± 15%

Circuit-breaker	Power supply voltage [V AC/DC]
T7	24...30
T7	48
T7	60
T7	110...125
T7	220...250
Delay which can be set [s]	0.5 - 1 - 1.5 - 2 - 3

Testing extension for service releases

Available for Tmax T4, T5 and T6, this allows the service releases to be supplied with the circuit-breaker in the removed position. With the circuit-breaker in safe conditions, i.e. isolated in relation to the power circuits, this makes it possible to carry out blank tests of the circuit-breaker functionality.

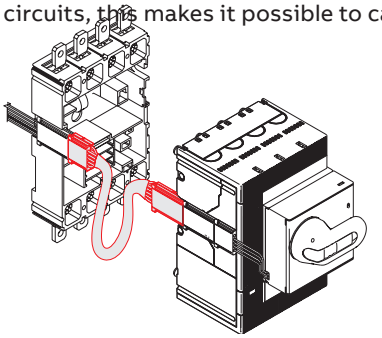

MOTOR OPERATORS

Stored energy motor operator for T4, T5 and T6 – MOE and MOE-E

With the stored energy motor operator, it is possible to control both opening and closing of the circuit-breaker on which it is installed. During opening of the circuit-breaker, the spring system is recharged automatically: the stored energy is exploited in this way to close the circuit-breaker.

The motor operator is always supplied with socket-plug connectors with 1 m long cables and is always fitted with a padlock in the open position, which prevents any command, either locally or remotely. The connectors, once inserted in the special slot on the left-hand side of the circuit-breaker, extend in relation to the outline of the circuit-breaker itself and are only compatible with pre-wired electrical accessories.

A selector allows passage from automatic to manual operation and it is also available a block (supplied as standard) for the operating mode of the motor. The motor operator can be fitted both with a key lock in the open position (with the same MOL-S keys for groups of circuit-breakers or different MOL-D keys) and with an MOL-M key lock against manual operation: in the former case, the lock in the open position is both of electrical and mechanical type, in the latter case, only of mechanical type, i.e. only closing from the front of the circuit-breaker (remote closing is allowed). In the case of interlocked circuit-breakers, for safety reasons the key lock against manual operation is required.

The motor operator is always fitted with a contact to signal “auto” or “manual” (not on changeover).

On request, it can also be fitted with an AUX-MO auxiliary contact (on changeover), which provides a signal of its state of service: “auto” (remote control of the circuit-breaker) or “manual”.

If the circuit-breaker is fitted with PR222DS/PD, Ekip E-LSIG and PR223DS electronic trip unit, instead of the MOE motor operator, it is possible to use the MOE-E motor operator: for its use, the circuit-breaker must also be fitted with the AUX-E auxiliary contacts (standard supply with MOE-E). The MOE-E allows use of the digital signals coming from the supervision and control system, by means of the PR222DS/PD, Ekip E-LSIG, PR223DS trip unit and the AUX-E contacts, and to convert these into power signals to operate the motor operator. All the characteristics indicated above for the MOE motor operator are also valid for the MOE-E. The motor operator functions are also guaranteed thanks to permanent opening/closing electric power.

The main parameters relative to the stored energy motor operator are indicated in the table.

MOE AND MOE-E

			Tmax T4-T5		Tmax T6
Rated voltage, Un		AC [V]	DC [V]	AC [V]	DC [V]
		–	24	–	24
		–	48...60	–	48...60
		110...125	110...125	110...125	110...125
		220...250	220...250	220...250	220...250
		380	–	380	–
Operating voltage	[% Un]	85...110	85...110	85...110	85...110
Power consumption on inrush Ps		≤ 300 VA	≤ 300 W	≤ 400 VA	≤ 400 W
Power consumption in service Pc		≤ 150 VA	≤ 150 W	≤ 150 VA	≤ 150 W
Duration	opening [s]		1.5		3
	closing [s]		< 0.1		< 0.1
	resetting [s]		3		5
Mechanical life	[No. operations]		20000		10000
Degree of protection, on the front			IP30		IP30
Minimum control impulse time on opening and closing	[ms]		150		150

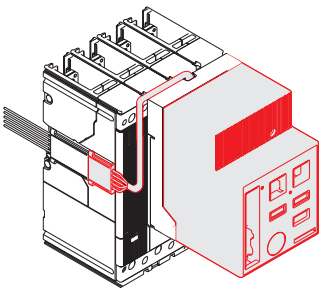

Spring charging motor for T7 motorizable
Available for circuit-breakers Tmax T4, T5 and T6, this allows the motor operator to be connected to the relative power supply circuit with the circuit-breaker in the removed position. With the circuit-breaker in a safe position, i.e. isolated in relation to the power circuits, it is possible to carry out blank tests of the circuit-breaker functions.

Testing extension for motor operators
Only available on Tmax T7 in the motorizable version, it automatically charges the circuit-breaker operating mechanism springs. This operation is carried out automatically immediately after closure of the circuit-breaker.
When there is no power supply or during maintenance work, the closing springs can, in any case, be charged manually by means of the special operating mechanism lever. It is always fitted with limit contact. The spring charging motor can be fitted with a terminal to be mounted in the terminal board to carry out the cabling.

SPRING CHARGING MOTOR

			Tmax T7
Rated voltage, Un		AC [V]	DC [V]
		24...30	24...30
		48...60	48...60
		100...130	100...130
		220...250	220...250
		380...415	
Opering voltage	[% Un]	85...110	85...110
Inrush power consumption (Ps) Inrush time 200ms		≤ 300 VA	≤ 300 W
Rated power (Pn)		100 VA	100 W
Charging time	[s]	8 - 10	8 - 10

Note: To allow a complete remote control with T7 motorizable, the circuit-breaker must be fitted with:
– shunt opening release;
– shunt closing release;
– spring charging motor.

MOTOR OPERATORS

Adapters – ADP

For the SOR, PS-SOR, UVR, AUX, MOE or MOE-E and AUE pre-wired electrical accessories, used with Tmax T4, T5 and T6 in the plug-in or withdrawable version, it is necessary to use the adapters to be coupled with the plug, which will than be connected to the socket on the fixed part, for the moving parts.
According to the electrical accessories required, one or two adapters will be needed to be mounted on the left and/or right side of the moving part.
There are four types adapters available:

- 5-way adapters
- 6-way adapters
- 10-way adapters
- 12-way adapters.

The table below indicates the adapters which have to be used for the various possible combinations of electrical accessories:

ADAPTERS ADP FOR T4, T5 AND T6 WIRED ACCESSORIES

	5- way	6- way	10- way	12- way
left side				
SOR	●			
UVR	●			
MOE (MOE-E)			●	
MOE (MOE-E) + SOR or UVR			●	
AUE			●	
AUE + SOR or UVR			●	
right side				
AUX 1Q + 1SY 1 open/closed changeover contact + 1 trip unit tripped changeover contact		●		
AUX 2Q 2 open/closed changeover contacts		●		
AUX 3Q + 1SY 3 open/closed changeover contacts + 1 trip unit tripped changeover contact				●

Socket plug connectors

In order to allow the racking-in and racking-out operations of the moving part of the plug-in circuit-breaker, the unwired electrical accessories of Tmax T4, T5 and T6 must be fitted with one or more socket plug connectors, as per the table below.

SOCKET PLUG CONNECTORS

	3 poles	6 poles	12 poles
T4-T5-T6			
SOR	●		
UVR	●		
AUX 1Q +1SY 1 open/closed changeover contact + 1 trip unit tripped changeover contact		●	
AUX 2Q 2 open/closed changeover contacts		●	
AUX 3Q + 1SY 3 open/closed changeover contacts + 1 trip unit tripped changeover contact			●

OPERATING INSTALLATION MECHANISM AND LOCKS

—
T4-T6

Rotary handle operating mechanism – RHD/RHE
Thanks to its ergonomic grip, the rotary handle facilitates the circuit-breaker closing and opening operations. It is always fitted with a padlock-lock in the open position which prevents circuit-breaker closing. The opening in the padlock-lock can take up to 3 padlocks - 7 mm Ø stem (not supplied). It is always fitted with a compartment door lock and on request it can be supplied with a key lock in the open position. Application of the rotary handle operating mechanism is an alternative to the motor operator and to the front for lever operating mechanism for T4, T5 and T6. The rotary handle operating mechanism is available in either the direct version or in the transmitted version on the compartment door and the rotary handle operating mechanism in the emergency version, complete with red on yellow background handle, suitable for controlling machine tools, is available in both the versions.
The rotary handle operating mechanism is available on T7 with lever operating mechanism and, only for the direct version, is characterised by an articulated grip which allows the switchgear door to be opened in case of an emergency with the circuit-breaker closed. The release settings and nameplate data remain accessible to the user. The transmitted rotary handle operating mechanisms can be ordered by building up the following three devices:
- rotary handle on the compartment door
- transmission rod (500 mm)
- base for circuit-breaker or, alternatively, by using the code of the ready-configured version.

TYPE OF RH_ OPERATING MECHANISM

				T4, T5		T6	T7[1]
		F	P	W	F	W	F
RHD	Direct	●	●	●	●	●	●
RHD_EM	Emergency direct	●	●	●	●	●	●
RHE	Transmitted with adjustable distance	●	●	●	●	●	●
RHE_EM	Emergency transmitted with adjustable distance	●	●	●	●	●	●
RHE_B	Base for circuit-breaker	●	●	●	●	●	●
RHE_S	Rod for transmitted adjustable hadle	●	●	●	●	●	●
RHE_H	Handle for transmitted RH with adjustable distance	●	●	●	●	●	●
RHE_H_EM	Emergency handle for transmitted RH with adjustable distance	●	●	●	●	●	●

(1) The rotary handle operating mechanism is only available for T7 with lever operating mechanism and it is as an alterative to the key lock mounted on the circuit-breaker.

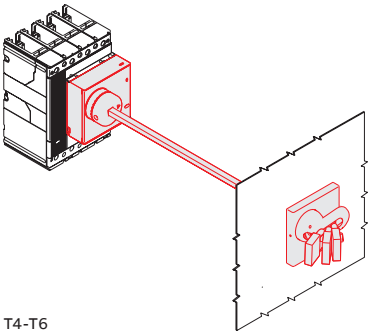

T4-T6

IP54 protection for rotary handle
Allows IP54 degree of protection to be obtained.
It is available for the transmitted rotary handle operating mechanism on the compartment door (RHE) for all the Tmax circuit-breakers.

IP44 protection for circuit breaker toggle
It is installed directly on the front of the circuit breaker and it allows IP44 degree of protection.

OPERATING INSTALLATION MECHANISM AND LOCKS

Front for lever operating mechanism – FLD
This can be installed on fixed, plug-in or withdrawable Tmax T4, T5 and T6 circuit-breakers. In the case of withdrawable circuit-breakers, installed in a switchboard, it allows the IP40 degree of protection to be maintained for the whole isolation run of the circuit-breaker.
It is always fitted with a padlock in the open position (6 mm Ø stem up to three padlocks - not supplied) which prevents closing of the circuit-breaker and of the compartment door, and with compartment door lock. On request, it can be fitted with a key lock in the open position.
It is available in the following versions:
- for fixed or plug-in circuit-breaker
- for withdrawable circuit-breaker.

The front for lever operating mechanism is always an alternative to the motor operator and to the rotary handle.
The same flange for the compartment door already supplied with the circuit-breaker or the one supplied with the conversion kit for withdrawable version can be used.

Padlock for operating lever – PLL
The padlock in open position for T7 is directly mounted on the circuit-breaker cover.

Key lock on the circuit-breaker for T7 – KLC
On T7 the key lock in the open position is mounted directly on the circuit-breaker cover both in the version with different keys and with the same keys. Arrangements for Ronis and Profalux key locks are also available.

Key lock for T4, T5, T6 and T7 – KLF-D and KLF-S
This allows mechanical operation of the circuit-breaker to be locked. This lock can be used with the direct or transmitted rotary handle operating mechanism mounted on the base for circuit-breaker or with the front for lever operating mechanism.
The lock of the circuit-breaker in the open position ensures isolation of the circuit in accordance with the IEC 60947-2 Standard. For T4, T5, T6 and T7 in the lever operating mechanism version key locks in the open position are available either with different keys (KLF-D) or with the same keys (KLF-S): in this case, up to four different key numbering codes are available (n. 2005-2006-2007-2008).

Lock in the racked-out position for fixed part (T4, T5 and T6)
For T4, T5 and T6 withdrawable circuit-breakers, key or padlocks locks are available to be applied onto the rail of the fixed part, to prevent racking-in of the plug-in part.
Selection can be made among the following:
- key lock with different keys (KLF-D FP)
- key lock with the same keys for groups of circuit-breakers (KLF-S FP)
- Ronis type key lock (KLF-D Ronis FP)
- padlock, which can take up to three padlocks with 6 mm stem Ø, not supplied (PLL FP).

Mechanical lock of compartment door
Available on T7 both for the lever operating mechanism and for the motorizable version. It does not allow the compartment door to be opened with the circuit-breaker closed (and circuit-breaker racked-in for circuit-breakers in the withdrawable version) and locks the circuit-breaker closing with the compartment door open.
Two versions are available: a door lock made by means of cables and a second type fixed directly on the side of the circuit-breaker or of the relative fixed part. The cable door lock must also be fitted with the interlock cable kit and the interlocking plate corresponding to the combined circuit-breaker.

OVERVIEW OF THE AVAILABLE LOCKS

	T4	T5	T6	T7
FDL Front for lever operating mechanism	●	●	●	
PLL_ Padlock for operating lever				●
KLC_ Key lock on the circuit-breaker				●
KLF-D and KLF-S Key lock for front for lever and rotary handle	●	●	●	
MOL-D and MOL-S_ Key lock in open position for MOE and MOE_E	●	●	●	
MOL-M_ Key lock against manual operation for MOE and MOE_E	●	●	●	
KLF-FP and PLL FP_ Locks in open position for fixed part	●	●	●	●
Mechanical lock on compartment door				●

Transparent pushbutton protection – TCP
A transparent protection for the circuit-breaker opening and closing pushbuttons is available in two different versions on T7 with stored energy operating mechanism: one which protects both the pushbuttons and the other which alternatively protects either the opening or the closing pushbutton.
There is the possibility of putting a padlock, which adds the lock function to the protection. In the closed position this lock does not prevent release of the mechanism following a fault or a remote command.

IP54 door protection
Available with T7 motorizable, it is made by means of a transparent plastic cover which completely protects the front of the circuit-breaker and allows IP54 degree of protection to be reached. Mounted on hinges, it is provided with a key lock.

ACCESSORIES FOR ELECTRONIC TRIP UNITS

SACE PR212/CI contactor control unit

This is applied to the external neutral conductor and allows protection G against earth faults to be carried out with external neutral three-pole circuit-breakers.

The current sensor must be connected to the trip unit by means of the specific connectors X4 for T4, T5 and T6 or with a direct connection in the terminal board for T7. The combination is not possible with electronic trip unit PR221.

T4 [A]	T5 [A]	T6 [A]
100	320	630
160	400	800
250	630	1000
320		

Connectors

Connectors X3 and X4 allow connection of the electronic trip units with external plant units or components. In fact, they are used to make the L alarm signal available outside, connection of the external neutral, connection to the LD030 DO signalling unit, to the PR212/CI contactor control unit or to the temperature sensor of the PTC motor and allows two-way communication from the circuit-breaker fitted with dialogue towards the outside and vice versa.

Both the connectors are available both for fixed version circuit-breakers and for plug-in or withdrawable version circuit-breakers.

Connector	Function	Trip unit
X3	LD030 DO	PR222DS/PD
	L alarm signal	PR222DS/P, PR222DS/PD
	Auxiliary supply	PR222DS/PD, Ekip M-LRIU
	EP 010	PR222DS/PD
X4	External neutral	PR222DS/P, PR222DS/PD
	PR212/CI	Ekip M-LRIU
	PTC generic contact 0/1	Ekip M-LRIU

ACCESSORIES FOR TRIP UNITS

Circuit-breakers			T4-T5-T6
Trip units	**PR222DS/P**	**PR222DS/PD**	**Ekip M-LRIU**
Accessories			
LD030 DO(1) - Signalling unit		●	●
HMI030(1) - Interface on the front of switchgear		●	
VM210 - Voltage measuring unit			
X3 - Connectors	●	● (3)	●
X4 - Connectors	●	●	●
X13 - Connectors SHORT/LONG	●	●	●
MOE-E (AUX-E included)(2) - Motor operator		●	
AUX-E - Auxiliary contacts		●	
CT - Current transformers	●	●	●
PR212/CI - Contactor control unit			●
Extracode for interchangeability			
Rating plugs			
PR030/B - Power supply unit			

(1) Accessories not compatible; (2) Accessories not compatible; (3) Compulsory

Ekip TT

The Ekip TT accessory is supplied with a special connector which makes connection between the electronic trip unit and the Ekip TT unit easier. The kit also include an adaptor which allows use with the current Tmax breakers.

Ekip TT is a device which allows:

- verify the correct functioning of the electronic trip unit's opening solenoid and the trip mechanism of circuit-breaker (trip test);
- testing of the LEDs on the electronic trip unit it is connected to;
- (in case of intervention by electronic trip unit) to supply the trip unit powered by auxiliary power to show the latest intervened protection. Simply linking Ekip TT to the electronic trip unit, the LED light on the latest protection intervened.

Its reduced dimension make it pocket size.

Ekip T&P

Ekip T&P is a kit purpose studied to supervise, configure and testing electronic protection trip units. The kit is composed by:

- Ekip T&P unit;
- Ekip TT unit;
- Adaptors for Emax and Tmax trip units;
- USB cable for connecting the Ekip T&P unit to the electronic trip unit;
- CD for installing Ekip Connect and the Ekip T&P driver.

The Ekip T&P unit is connected on one side to the USB port of the PC and on the other, by means of a cable, to the protection trip unit of the SACE Tmax series. The Ekip T&P unit allows automatic, manual test and the trip test of the device it is connected to. These functions are managed by means of the Ekip T&P Interface which can only be activated directly by the Ekip Connect when the Ekip T&P is present and connected to the PC.

	Ekip T&P functions						Ekip TT functions		
	Trip Test	Protection function test	Parameter reading	Protection parameter programming	Comunication parameter programming	Thermal memory enabling/disabling	Trip Test	LED test	Latest trip detection
Distribution protection									
PR221DS LS/I	Not compatible						●	-	-
PR221DS I	Not compatible						●	-	-
PR222DS/P LSI	●	●	●	●	-	-	●	-	-
PR222DS/P LSIG	●	●	●	●	-	-	●	-	-
PR222DS/PD LSI	●	●	●	●	●	-	●	-	-
PR222DS/PD LSIG	●	●	●	●	●	-	●	-	-
Motor protection									
EKIP M-LRIU	●	●	●	●	n	-	n	n	n

ACCESSORIES FOR ELECTRONIC TRIP UNITS

Flange for compartment door
This is always supplied with the Tmax circuit-breakers. All the flanges in the Tmax series are of new design and do not require the use of screws for installation: fixing is greatly simplified by just a simple coupling operation. When a rotary handle operating mechanism or residual current releases is used, a dedicated flange is supplied to be used instead of the one supplied with the circuit-breaker.
For T4, T5, T6 and T7 withdrawable circuit-breakers, the flange supplied with the fixed part must be used instead of the one supplied with the fixed circuit-breaker.

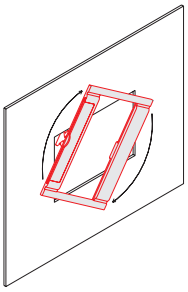

Spare parts
A wide range of spare parts is available for the Tmax family of circuit-breakers. For further details about the complete range of spare parts available, please ask for the “Spare Parts Catalogue” from the Service Division of ABB SACE.

COMPATIBILITY OF INTERNAL ACCESSORIES

Compatibility
An overview of the assembly compatibility of (internal) accessories with the Tmax Series circuit-breakers can be found in this section.

Possible combination among the internal accessories
The drawing represents the internal slot of the circuit-breakers. A, C and F are housed in the slots on the left of the operating lever, while B, D, E and G in the right one.

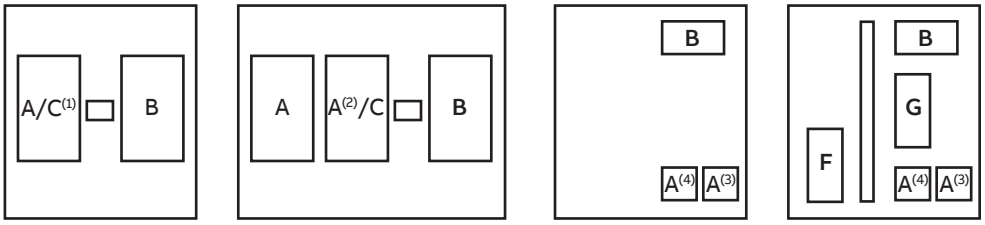

T4, T5, T6 3 poles | T4, T5, T6 4 poles | T7 3/4 poles | T7M 3/4 poles

(2) only SOR-C for T4-T5-T6. Order also the 3-way connector for second SOR-C 1SDA055273R1
(3) position for assembly of the SOR
(4) position for assembly of the UVR

A = Shunt opening release (SOR) or Undervoltage release (UVR)
B = Auxiliary contacts
C = Trip coil of the residual current
D = Trip coil of the electronic trip unit PR221DS
E = Auxiliary contacts for T2 with electronic trip unit PR221DS
F = Spring charging motor
G = Shunt closing release (SCR)

07

INSTALLATION

7/2 **Installation environment**
7/2 Temperature
7/2 Environmental conditions
7/2 Shocks and vibrations
7/2 Electromagnetic compatibility
7/3 Degree of protection
7/3 Installation position
7/4 **Temperature performance**
7/4 Circuit Breakers for DC applications ≥1000V DC - IEC
7/5 Circuit Breakers for DC applications ≥1000V DC - UL
7/7 Circuit breaker for AC applications ≥ 800V AC
7/8 **Power losses**
7/10 **Insulation distances**
7/10 Clearances for installation in metallic cubicles
7/12 Minimum clearance between two side by side circuit-breakers
7/14 **Characteristic curves**
7/14 Trip curves for power distribution
7/14 Circuit Breakers for DC applications ≥1000V DC - IEC
7/16 Circuit Breakers for DC applications ≥1000V DC - UL
7/17 Circuit breaker for AC applications ≥800V AC - Tmax T-HA for applications up to 800V AC
7/19 Tmax T for applications up to 1150V AC
7/22 **Specific let-through energy curves**
7/22 Circuit Breakers for DC applications ≥1000V DC - IEC
7/24 Tmax T for applications up to 1150V AC
7/26 **Limitation curves**
7/26 Circuit Breakers for DC applications ≥1000V DC - IEC
7/28 Tmax T for applications up to 1150V AC

Installation environment

Temperature
The Tmax T circuit-breakers can be used in environmental conditions where the ambient air temperature varies between -25°C and +70°C, and can be stored at temperatures between -40°C and +70°C. Circuit-breakers fitted with thermomagnetic trip units have their thermal element set for a reference temperature. For temperatures other than the reference, a trip threshold variation must be taken into ac-count. Electronic trip units do not undergo any variations in performance as the temperature varies, but, in the case of temperatures exceeding +40°C, the maximum setting for protection L (protection against overloads) must be reduced, as indicated in the derating graph, to take into account the heating pheno-mena which occur in the copper parts of the circuit-breaker which the phase current passes through. For temperatures above +70°C the circuit-breaker performances are not guaranteed.

Shocks and vibrations
The Tmax T circuit-breakers are unaffected by vibrations generated mechanically and due to electro-magnetic effects, in compliance with the IEC 60068-2-6 Standards and the regulations of the major ship-ping registers including:
- RINA
- Det Norske Veritas
- Bureau Veritas
- Lloyd's Register of Shipping
- Germanischer Lloyd
- ABS
- Russian Maritime Register of Shipping
- Nippon Kaiji Kyokai.

The Tmax T circuit-breakers are also tested according to the IEC 60068-2-27 Standard to resist shocks up to 12g for 11 ms.

Environmental conditions
The Tmax T circuit-breakers are designed to operate in environments with a pollution degree of 3 ac-cording to the IEC 60947-2 Standard classification.

Altitude
Up to an altitude of 2000m, the Tmax T circuit-breakers do not undergo any alteration in their rated per-formances. As the altitude increases, the atmospheric properties are altered in terms of composition, dielectric resistance, cooling capacity and pressure. Therefore, some performance aspects of the circuit-breaker (e.g. the maximum rated operating voltage and the rated uninterrupted current) undergo derating.

	Altitude							
	2000m		3000m		4000m		5000m	
	In (%)	Ue (%)	In (%)	Ue (%)	In (%)	Ue (%)	In (%)	Ue (%)
Tmax T*	100	100	98	88	95	78	85	68
Tmax T-HA	100	100	100	100	100	100	98	88

*Tmax T (1000V AC/DC, 1150VAC); Tmax PV, Tmax PV-E

Electromagnetic compatibility
Electromagnetic compatibility
Protection is guaranteed in the presence of interference caused by electronic apparatus, atmospheric disturbances or electrical discharges by using the electronic trip units and the electronic residual current releases. No interference with other electronic apparatus near the place of installation is generated ei-ther. This is in compliance with the IEC 60947-2 Annex B + Annex F Standards and European Directive
No. 2014/30/EC regarding EMC - electromagnetic compatibility.

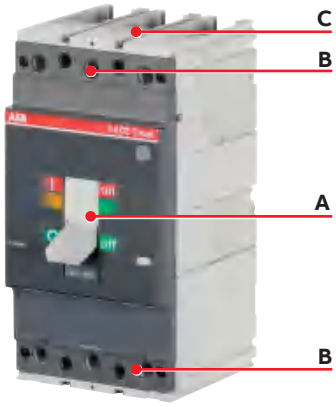

The fixed parts are always preset with IP20 degree of protection. IP54 degree of protection can be obtained with the circuit-breaker installed in a switchboard fitted with a rotary handle operating mechanism transmitted on the compartment door and special kit (RHE - IP54).

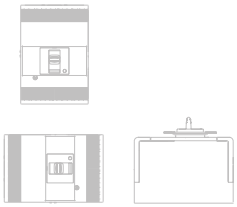

Degrees of protection

The table indicates the degrees of protection guaranteed by Tmax circuit-breakers according to the prescriptions of the IEC 60529 Standard:

	With front	Without front (2)	Without terminal covers	With high terminal covers	With low terminal covers	With IP40 protection kit on the front
A	IP40 (3)	IP20	-	-	-	-
B (4)	IP20	IP20	IP20	IP40	IP40	IP40
C	-	-	-	IP40 (1)	IP30 (1)	-

(1) After correct installation
(2) During installation of the electrical accessories
(3) Also for front for lever operating mechanism and direct rotary handle
(4) Only for T1...T6

Installation position

It is possible to mount the circuit-breakers in the fixed version in horizontal, vertical or lying down positions without any derating of the rated characteristics.

Temperature performance

Circuit-breakers with thermal-magnetic trip units
The circuit-breakers fitted with thermal-magnetic trip units have the thermal element set for a reference temperature of +40°C. With the same setting, for temperatures other than +40°C there is a variation in the thermal trip threshold.

Circuit-breaker with electronic trip units and switch-disconnectors
The electronic overcurrent trip units do not undergo any variations in performance as the temperature varies. However, even though heating does not affect the trip thresholds of the electronic trip units, in the case of temperatures exceeding +40°C it is advisable to reduce the maximum L (protection against overloads) setting to protect the copper parts of the circuit-breaker against high temperatures. The same considerations can be made for the switch-disconnectors.

Following tables indicate the variation for the different series of circuit breakers and switch-disconnectors.

CIRCUIT BREAKERS FOR DC APPLICATIONS ≥1000V DC - IEC

				Temperature derating						
	Voltage	Frame	In	10°C	20°C	30°C	40°C	50°C	60°C	70°C
Circuit breaker	1000VDC	T4	32	43	39	36	32	27	24	21
			50	62	58	54	50	46	42	39
			80	98	92	86	80	75	66	58
			100	118	113	106	100	95	85	75
			125	145	140	134	125	115	105	95
			160	185	176	168	160	150	140	130
			200	230	220	210	200	190	175	160
			250	285	274	262	250	240	230	220
		T5	320	368	350	335	320	305	285	263
			400	465	442	420	400	380	355	325
			500	620	580	540	500	450	400	345
		T6	630	740	705	660	630	580	540	500
			800	965	905	855	800	740	670	610
	1500VDC	T4N/PV-E	100	118	113	106	100	95	85	75
			125	145	140	134	125	115	105	95
			160	185	176	168	160	150	140	130
			200	230	220	210	200	190	175	160
			250	285	274	262	250	240	230	220
Switch disconnectors	1100VDC	T4D/PV	250	-	-	-	250	250	250	224
		T5D/PV	500	-	-	-	500	500	500	447
		T6D/PV	800	-	-	-	800	741	676	605
		T7D/PV 1250	1250	-	-	-	1250	1199	1141	1074
		T7D/PV 1600	1600	-	-	-	1600	1481	1352	1209
	1500VDC	T4D/PV-E	250	-	-	-	250	250	250	224
		T5D/PV-E	500	-	-	-	500	500	500	447
		T7D/PV-E 1250	1250	-	-	-	1250	1199	1141	1074
		T7D/PV-E 1600	1600	-	-	-	1600	1481	1352	1209

Circuit Breakers for DC applications ≥1000V DC - UL
Please note that for UL MCCBs two deratings are given, according to UL489B: one when 40°C cables are used, and one when 50°C cables are used. Cables dimensions are given by UL489B. Below, please find the relevant cabling info.

Ambient temp.		40°C		50°C
Cable type	Copper	Aluminum	Copper	Aluminum
In (A)	required wires (number x section)		required wires (number x section)	
T4N-D/PV				
200	1 x 3/0 AWG	1 x 250kcmil	1 x 300kcmil	Lug not available
T4N/PV				
40	1 x 8 AWG	1 x 8 AWG	1 x 6 AWG	1 x 4 AWG
50	1 x 8 AWG	1 x 6 AWG	1 x 4 AWG	1 x 3 AWG
80	1 x 4 AWG	1 x 2 AWG	1 x 2 AWG	1 x 1/0 AWG
100	1 x 3 AWG	1 x 1 AWG	1 x 1/0 AWG	Lug not available
125	1 x 1 AWG	1 x 2/0 AWG	1 x 2/0 AWG	1 x 4/0 AWG
150	1 x 1/0 AWG	1 x 3/0 AWG	1 x 3/0 AWG	1 x 250kcmil
200	1 x 3/0 AWG	1 x 250kcmil	1 x 300kcmil	Lug not available
T5N-D/PV				
400	2 x 3/0 AWG	Lug not available	2 x 300kcmil	Lug not available
T5N/PV				
225	1 x 4/0 AWG	1 x 300kmcil	1 x 350kcmil	2 x 3/0 AWG
250	1 x 250kcmil	1 x 350kcmil	1 x 400kcmil	Lug not available
300	1 x 350kcmil	Lug not available	2 x 3/0 AWG	Lug not available
400	2 x 3/0 AWG	Lug not available	2 x 300kcmil	Lug not available
T6N-D/PV				
600	2 x 350kcmil	2 x 500kcmil	3 x 300kcmil	3 x 400kcmil
T6N/PV				
600	2 x 350kcmil	2 x 500kcmil	3 x 300kcmil	3 x 400kcmil
T7N-D/PV				
1000	3 x 400kcmil	4 x 350kcmil	4 x 400kcmil	Lug not available
T7N-D/PV-E				
1000	3 x 400kcmil	4 x 350kcmil	4 x 400kcmil	Lug not available

Temperature performance

				Temperature derating							
						With 40°C Cables					With 50°C Cables
	Voltage	**Frame**	**In**	**40°C**	**50°C**	**60°C**	**70°C**	**40°C**	**50°C**	**60°C**	**70°C**
Circuit breaker	1000VDC	T4N/PV	40	40	36	33	30	40	40	36	32
			50	50	45	42	38	50	50	45	40
			80	80	72	66	60	80	80	72	64
			100	100	90	83	75	100	100	91	80
			125	125	113	104	94	125	125	113	100
			150	150	135	125	113	150	150	136	120
			200	200	180	166	150	200	200	181	160
		T5N/PV	225	225	200	175	160	225	225	200	175
			250	250	225	195	165	250	250	220	190
			300	300	270	240	210	300	300	265	230
			400	400	387	373	300	400	400	380	360
		T6N/PV	600	600	600	525	450	600	600	525	450
			800	800	800	700	600				
	1500VDC	T4N/PV-E	40	40	36	33	30	40	40	36	32
			50	50	45	42	38	50	50	45	40
			80	80	72	66	60	80	80	72	64
			100	100	90	83	75	100	100	91	80
			125	125	113	104	94	125	125	113	100
			150	150	135	125	113	150	150	136	120
			200	200	180	166	150	200	200	181	160
Switch disconnectors	1100VDC	T1N-D/PV	100	100	100	87	71				
		T4N-D/PV	200	200	200	184	167				
		T5N-D/PV	400	400	400	386	372				
		T6N-D/PV	600	600	600	525	450				
			800	800	800	700	600				
		T7N-D/PV	1000	1000	1000	866	707				
			1200	1200	1054	912	751				
	1500VDC	T4N-D/PV-E	200	200	200	184	167				
		T7N-D/PV	1000	1000	1000	866	707				
				1200	1054	912	751				

Circuit breaker for AC applications ≥ 800V AC

TEMPERATURE DERATING TM (IEC+UL)

				Temperature derating - Thermomagnetic release						
Standad	**Voltage**	**Frame**	**In**	**10°C**	**20°C**	**30°C**	**40°C**	**50°C**	**60°C**	**70°C**
IEC	800VAC 1000VAC 1150VAC	T4 T4V-HA	32	43	39	36	32	27	24	21
			50	62	58	54	50	46	42	39
			80	98	92	86	80	75	66	58
			100	118	113	106	100	95	85	75
			125	145	140	134	125	115	105	95
			160	185	176	168	160	150	140	130
			200	230	220	210	200	190	175	160
			250	285	274	262	250	240	230	220
		T5 T5V-HA T5X-HA	320	368	350	335	320	305	285	263
			400	465	442	420	400	380	355	325
			500	620	580	540	500	450	400	345
		T6	630	740	705	660	630	580	540	500
			800	965	905	855	800	740	670	610
UL	800VAC	T4V-HA	80	94	90	85	80	75	68	62
			100	118	112	106	100	95	85	77
			125	148	140	133	125	119	106	100
			150	177	168	159	150	143	127	114
			200	236	224	212	200	190	170	167
		T5V-HA T5X-HA	300	345	328	314	300	286	267	254

TEMPERATURE DERATING EL (IEC+UL)

				Temperature derating - Electronic release					
Standad	**Voltage**	**Frame**	**In**	**Version**	**Terminals**	**40°C**	**50°C**	**60°C**	**70°C**
IEC	1000VAC 1150VAC	T4	250	F	F - FC	250	250	250	220
				P - W	F - FC	250	250	250	210
		T5 T5V-HA**	400	F	F - FC	400	400	400	352
				P - W	F - FC	400	400	368	336
			630	F	F - FC	630	580	529	479
		T6	630	F	F - FC	630	630	598,5	567
					R (VR)	630	630	630	598,5
					R (HR)	630	630	567	504
				W	EF	630	598,5	567	504
					R (VR)	630	630	598,5	567
					R (HR)	630	598,5	567	504
			800	F	F - FC	800	800	760	720
					R (VR)	800	800	800	760
					R (HR)	800	800	720	640
				W	EF	800	760	720	640
					R (VR)	800	800	760	720
					R (HR)	800	760	720	640
UL	800VAC	T5V-HA T5X-HA	300	F	FC CuAl	300	264	228	189*

*In order to grant 288A it is necessary to use a cable size of 500kmcil with lug 1x240mm²
**Only for 630A F version

Power losses

To ensure service continuity of the plants, careful assessment of how to keep temperatures within ac-ceptable levels is necessary to guarantee operation of all devices (e.g. by using forced ventilation in switchboards and installation rooms).

The table below shows the dissipated power values per single pole at the rated current In for each circuit-breaker used. The total maximum dissipated power for a circuit-breaker used at 50/60Hz or in DC is equal to the power per single pole multiplied by the number of poles.

CIRCUIT BREAKER FOR DC IEC APPLICATIONS ≥1000V DC

	P (W/pole)				
	T4 T4D/PV T4D/PV-E T4N-PV/E	T5 T5D/PV T5D/PV-E	T6	T6D/PV	T7D/PV T/D/PV-E
In [A]	Fixed	Fixed	Fixed		Fixed
32	3.7				
50	3.9				
80	4.6				
100	5.2				
125	6.2				
160	7.4				
200	9.9				
250	13.7				
320		13.6			
400		19.5			
500		28.8			
630			30.6		
800			31	48	
1250					47
1600					77

CIRCUIT BREAKERS AND SWITCH DISCONNECTORS FOR DC UL APPLICATIONS ≥1000V DC

Type	Trip Unit	Version	In (A)	P (W/pole)
T4	MCS	UL	200	8.9
	TMD	UL	40	3.8
			50	3.9
	TMA	UL	80	6.4
			100	7.6
			125	7.9
			150	8
			200	10
T5	MCS	UL	400	19
	TMA	UL	400	29
T6	MCS	UL	600	31
			800	48
T7	TMA	UL	600	33
			800	50
	MCS	UL	1000	30
			1200	47

Circuit breaker for AC applications ≥800V AC

TMAX T-HA FOR APPLICATIONS UP TO 800V AC - IEC

Type	Trip Unit	In (A)	P (W/pole)
T4	TMA	80	4.6
		100	5.2
		125	6.2
		160	7.4
		200	9.9
		250	13.7
T5	TMA	320	13.6
		400	19.5
		500	28.8
	ELT	630	41.0

UL

Type	Trip Unit	In (A)	P (W/pole)
T4	TMA	80	4.6
		100	5.2
		125	5.7
		150	6.9
		200	9.9
T5	TMA	300	12.3
	ELT	300	9.3

TMAX T FOR APPLICATIONS UP TO 1150V AC

Power [W/pole]	In [A]	T4		T5		T6	
		F	P/W	F	P/W	F	W
TMD TMA TMG MF MA	20	3.6	3.6				
	25						
	32	3.7	3.7				
	40						
	50	3.9	4.1				
	63						
	80	4.6	5				
	100	5.2	5.8				
	125	6.2	7.2				
	160	7.4	9				
	200	9.9	12.4				
	250	13.7	17.6				
	320			13.6	20.9		
	400			19.5	31		
	500			28.8	36.7		
	630					30.6	39
	800					31	39.6
PR22.. PR23.. PR33..	100	1.7	2.3				
	160	4.4	6				
	250	10.7	14.6				
	320	17.6	24	10.6	17.9		
	400			16.5	28		
	630			41	53.6	30	38.5
	800					32	41.6
	1000					50	
	1250						
	1600						

Insulation distances

Clearances for installation in metallic cubicles

This section provides the compliance clearances for the installation of the circuit-breaker inside a metal cubicle.
The cubicle is the reference for the metallic parts of the switchgear assembly adjacent to the circuit-breaker and is used as a reference to define the clearances to be observed to permit the free evacuation of ionized gases and metal vapors and to prevent the ignition of adjacent parts.

The clearances refer to the tests carried out in compliance with the IEC 60947-2 Standard. The installation modality in relation to the type of circuit-breaker and the compulsory protections that must be used depending on the connection terminals is summarized in the tables below. For further details about installation, please see the related instructions provided with the circuit-breaker.

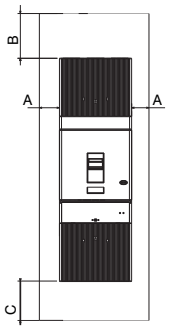

Picture 1

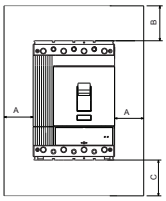

Picture 2

CIRCUIT BREAKERS AND SWITCH DISCONNECTORS FOR DC APPLICATIONS ≥1000V DC (IEC - UL)

					Insulation distances					
					A [mm]		B [mm]		C [mm]	
Standard		**Voltage**	**Frame**	**Picture**	**With jumper**	**No Jumpers**	**With jumper**	**No Jumpers**	**With jumper**	**No Jumpers**
IEC	Circuit Breakers	1000VDC	T4	1		50		150		150
			T5	1		50		150		150
			T6	1		30		20		20
		1500VDC	T4N/PV-E τ=1ms	2	50		210		210	
			τ=5ms	2	150		210		210	
	Switch Disconnectors	1100VDC	T4D/PV	2	50	50	120	120	120	120
			T5D/PV	2	57	25	120	120	105	105
			T6D/PV	2	50	50	100	100	110	110
			T7D/PV 1250	2	100	100	200	200	200	200
			T7D/PV 1600	2	130	130	200	200	200	200
		1500VDC	T4D/PV-E	2	50	50	120	120	120	120
			T5D/PV-E	2	57	57	122,5	122,5	122,5	122,5
			T7D/PV-E 1250	2	100	100	200	200	200	200
			T7D/PV-E 1600	2	130	130	200	200	200	200
UL	Circuit Breakers	1000VDC	T4N/PV	1	50		200		200	
			T5N/PV	1	57		200		200	
			T6N/PV	1	70		220		110	
		1500VDC	T4N/PV-E	2	50		200		200	
	Switch Disconnectors	1000VDC	T4N-D/PV	2	50		200		200	
			T5N-D/PV	2	57		200		200	
			T6N-D/PV	2	70		220		110	
			T7N-D/PV	2	165		230		200	
		1500VDC	T4N-D/PV-E	2	50		200		200	
			T7N-D/PV-E	2	165		230		200	

*IMPORTANT! For further details about installation, please see the related instructions provided with the circuit-breaker.

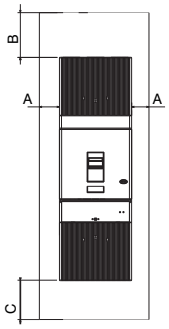

Circuit breaker for AC applications ≥800V AC

TMAX T AND TMAX T-HA (IEC - UL)

			Insulation distances	
Standard	**Voltage**		**A [mm]**	**B [mm]**
IEC	800VAC	T4V-HA	50	150
		T5V-HA	50	150
	1000VAC/1150VAC	T4	50	150
		T5	50	150
		T6	30	20
UL	800VAC	T4V-HA	54,5	90,5
		T5V-HA	121	90,5
		T5X-HA	121	90,5

*IMPORTANT! For further details about installation, please see the related instructions provided with the circuit-breaker.

Insulation distances

This section gives the clearances to be observed for side by side installation circuit-breakers and switch disconnectors. The following table show the minimum center distance between two circuit-breaker side by side.

When side by side breakers are different in size, the larger reference clearance should be considered. For further details about installation, please see the related instructions provided with the circuit-breaker.

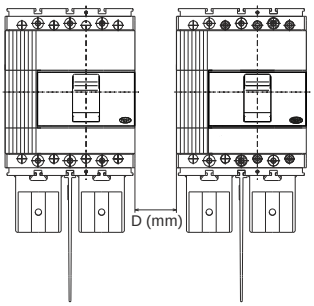

CIRCUIT BREAKERS AND SWITCH DISCONNECTORS FOR DC APPLICATIONS ≥1000V DC (IEC - UL)

			Side by side distances [mm]*			
Standard		**Voltage**	**Frame**		**With jumpers**	**No jumpers**
IEC	Circuit Breakers	1000VDC	T4			100
			T5			100
			T6			60
		1500VDC	T4N/PV-E	τ=1ms	135	
				τ=5ms	330	
	Switch Disconnectors	1100VDC	T4D/PV		100	100
			T5D/PV		100	50
			T6D/PV		100	100
			T7D/PV		200	200
		1500VDC	T4D/PV-E		100	100
			T5D/PV-E		100	50
			T7D/PV-E		200	200
UL	Circuit Breakers	1000VDC	T4N/PV		100	
			T5N/PV		100	
			T6N/PV		265	
		1500VDC	T4N/PV-E		100	
	Switch Disconnectors	1000VDC	T4N-D/PV		100	
			T5N-D/PV		100	
			T6N-D/PV		265	
			T7N-D/PV		330	
		1500VDC	T4N-D/PV-E		100	
			T7N-D/PV-E		330	

*insulation distances can be reduced using suitable insulation barriers between breakers

Circuit breaker for AC applications ≥800V AC

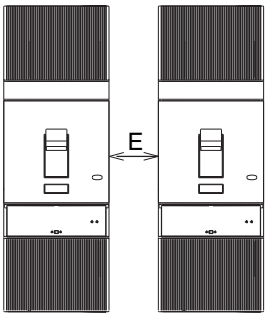

TMAX T-HA FOR APPLICATIONS UP TO 800V AC

	Side by side distances [mm]*		
Standard	**Voltage**	**Frame**	
IEC	800VAC	T4V-HA	100
		T5V-HA	100
	1000VAC/1150VAC	T4	100
		T5	100
		T6	60
UL	800VAC	T4V-HA	109
		T5V-HA	242
		T5X-HA	242

*insulation distances can be reduced using suitable insulation barriers between breakers

Characteristic curves

Trip curves for power distribution

Circuit Breakers for DC applications ≥1000V DC - IEC

T4 250 - TMA

In = 80÷250 A

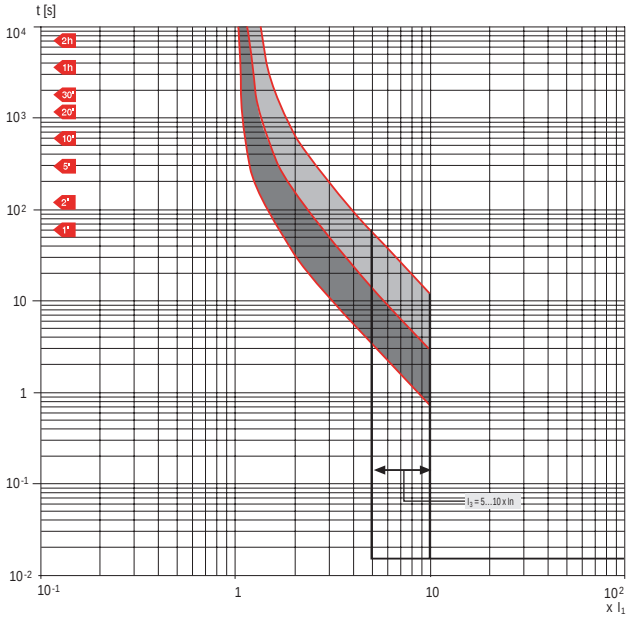

T5 400/630 - TMA

In = 320÷500 A

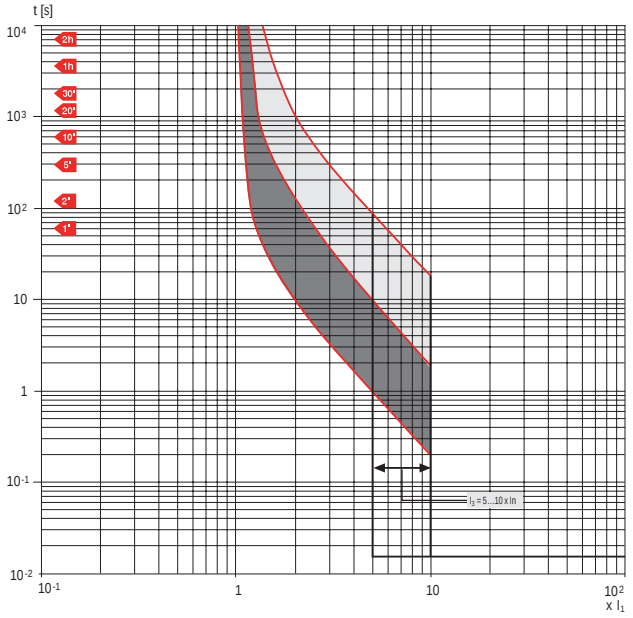

T6 630 - TMA

In = 630 A

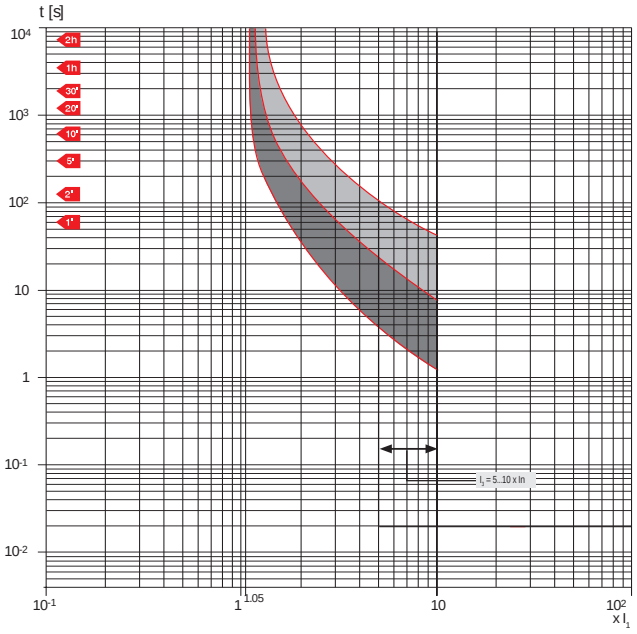

T6 800 - TM

In = 800 A

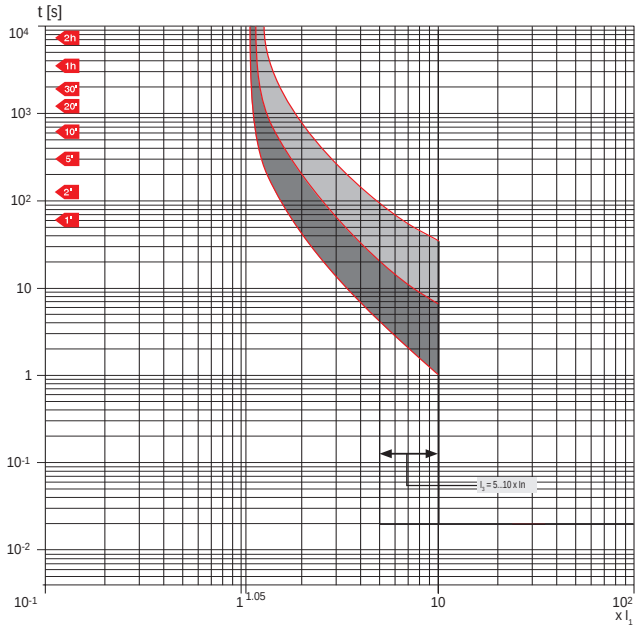

T4N/PV-E TMF 250

In = 100 ... 250A

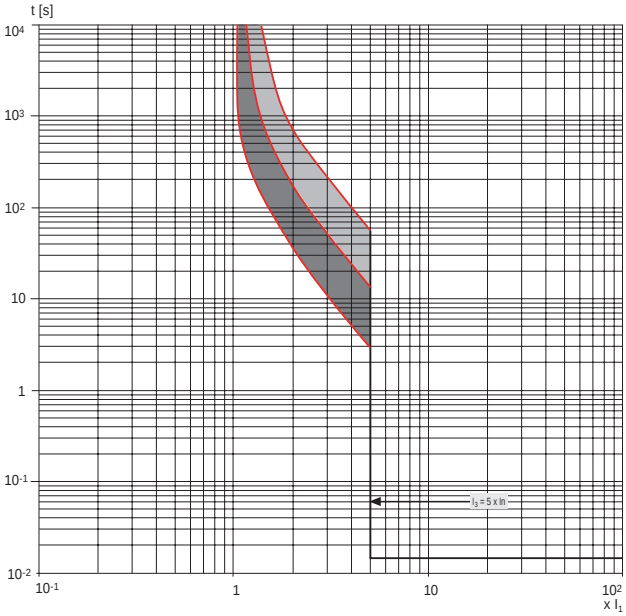

Characteristic curves

Trip curves for power distribution

Circuit Breakers for DC applications ≥1000V DC - UL

T4N/PV UL 200

In = 40 ... 200A

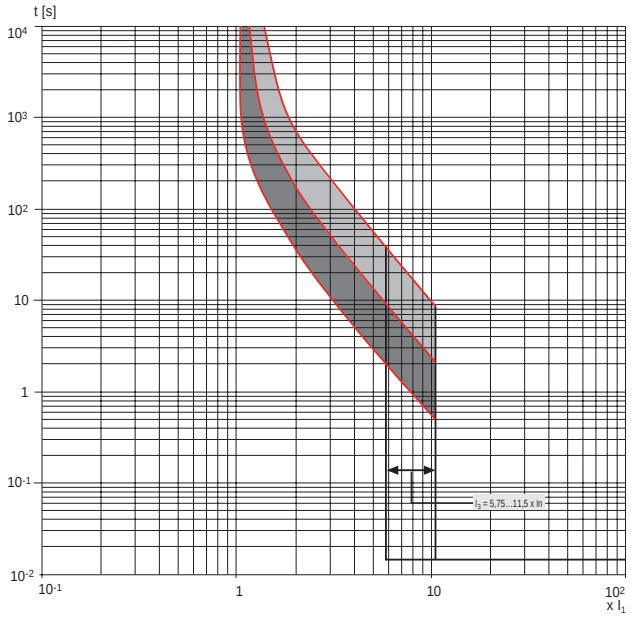

T5N/PV UL 400

In = 225, 250, 300, 400A

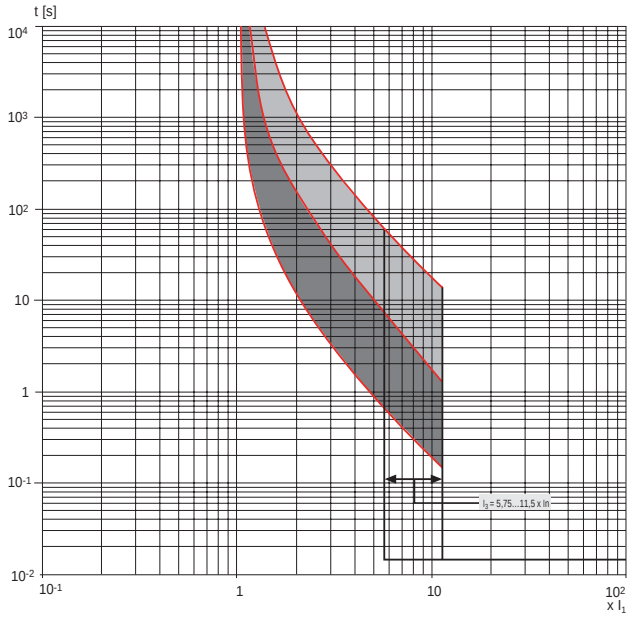

T6N/PV UL 600

In = 600A

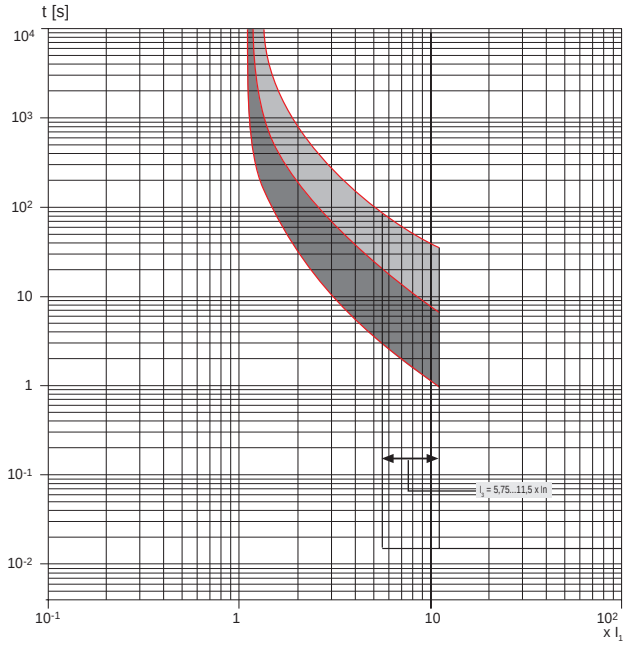

T6N/PV UL 800

In = 800A

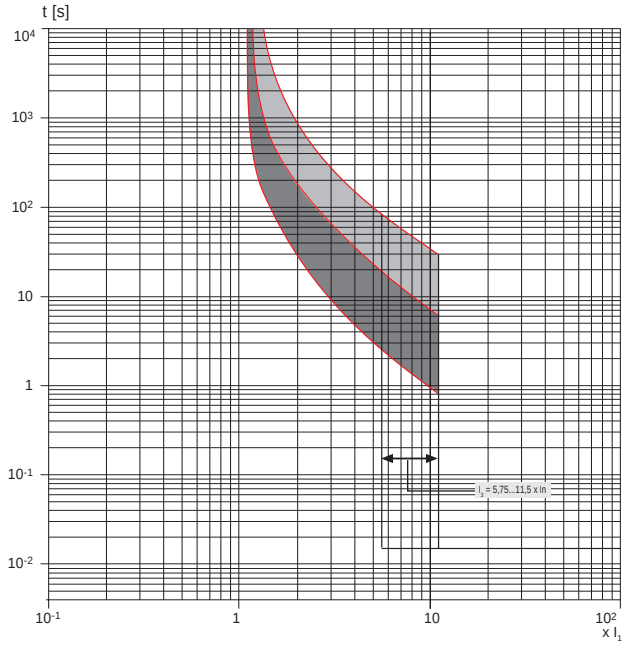

Circuit breaker for AC applications ≥800V AC Tmax T-HA for applications up to 800V AC
Circuit-breakers with thermomagnetic trip units - IEC

T4 TMA

In = 80...250A

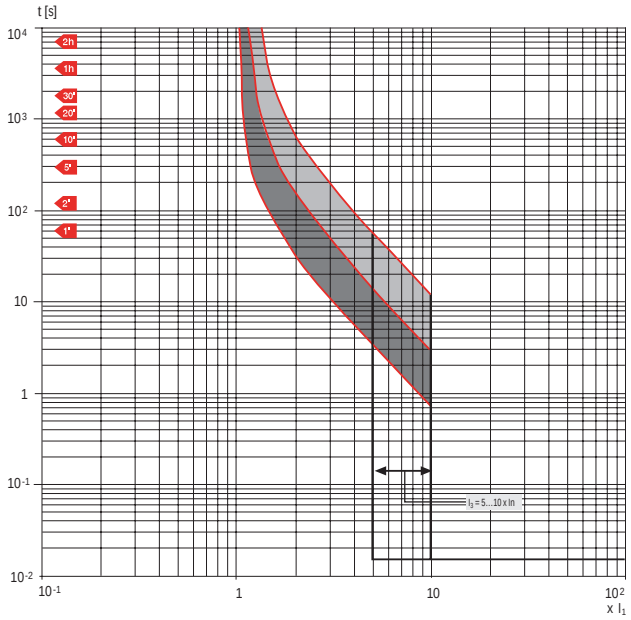

T5 TMA

In = 320...500A

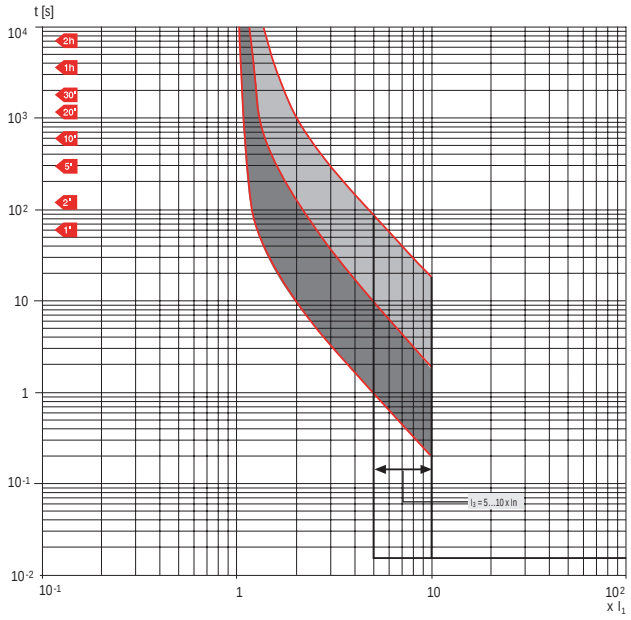

Circuit-breakers with electronic trip units - IEC

T5 PR221 - L-I Funcions

In = 630A I3 max = 9.5 x In

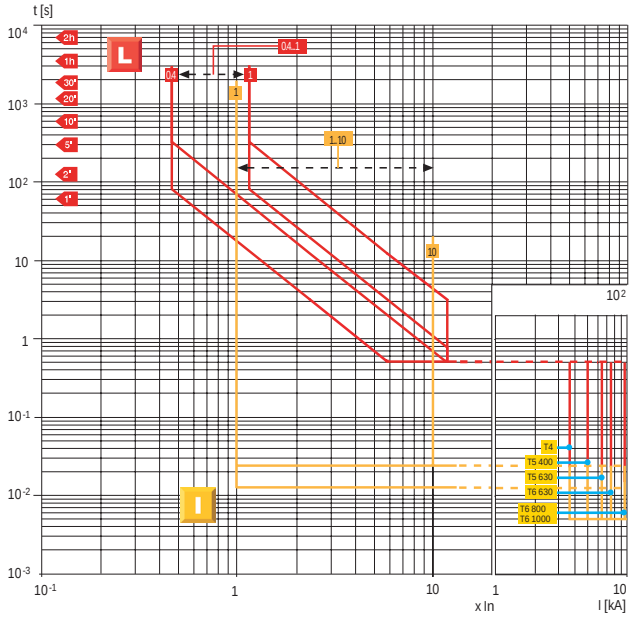

T5 PR221 -L-S Funcions

In = 630A I2 max = 9.5 x In

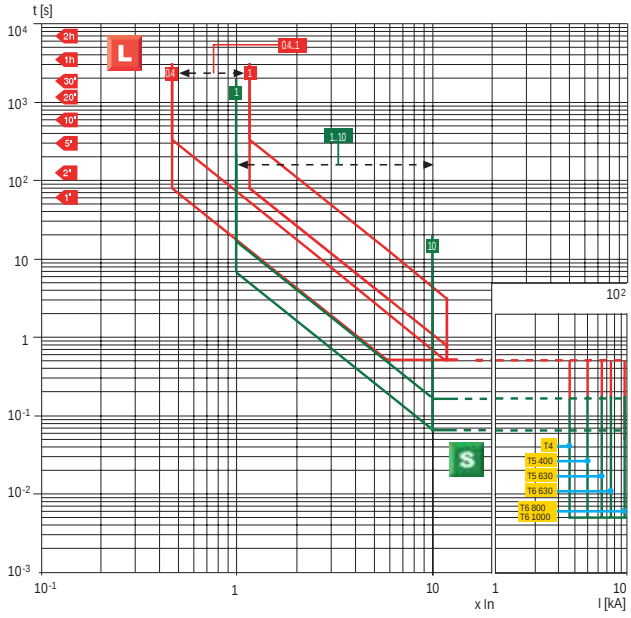

Characteristic curves

Trip curves for power distribution

Circuit-breakers with thermomagnetic trip units - UL

T4 TMA

In = 80...200A

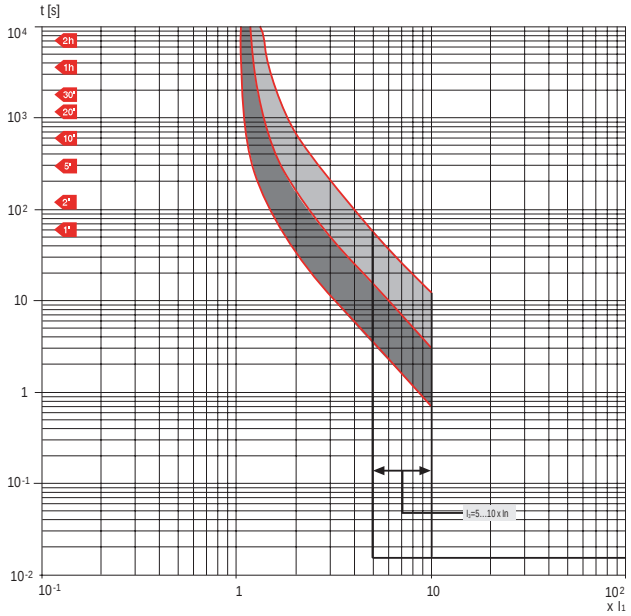

T5 TMA

In = 300A

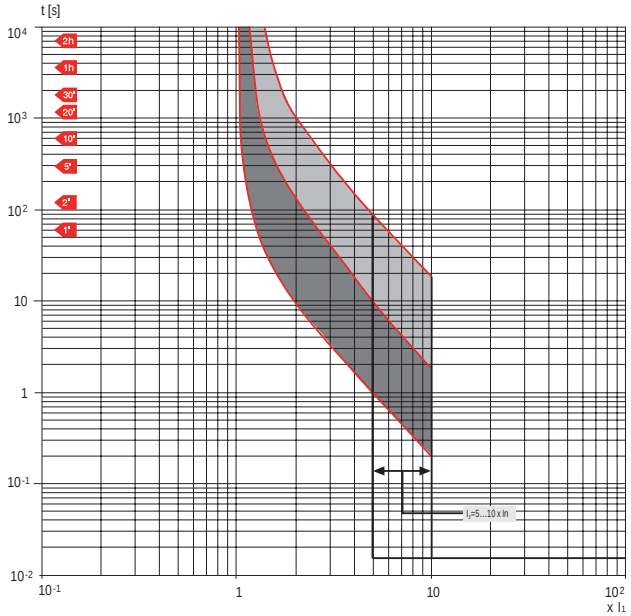

Circuit-breakers with electronic trip units - UL

T5 PR221 - L-I Funcions

In = 300A

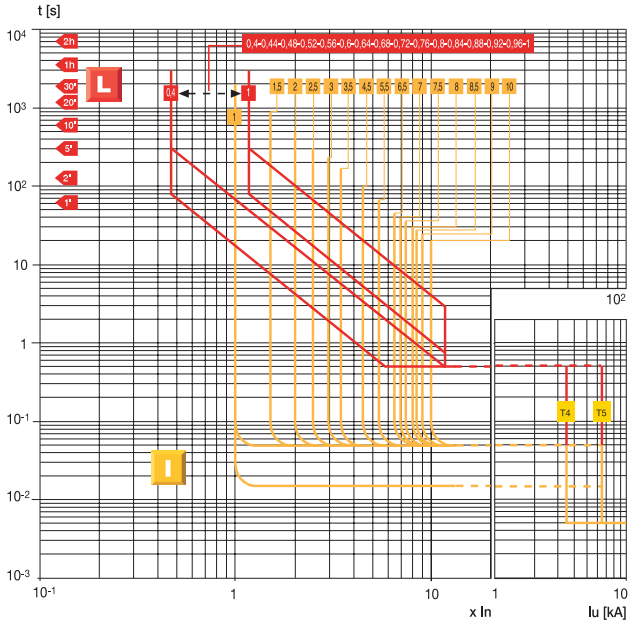

T5 PR221 - L-S Funcions

In = 300A

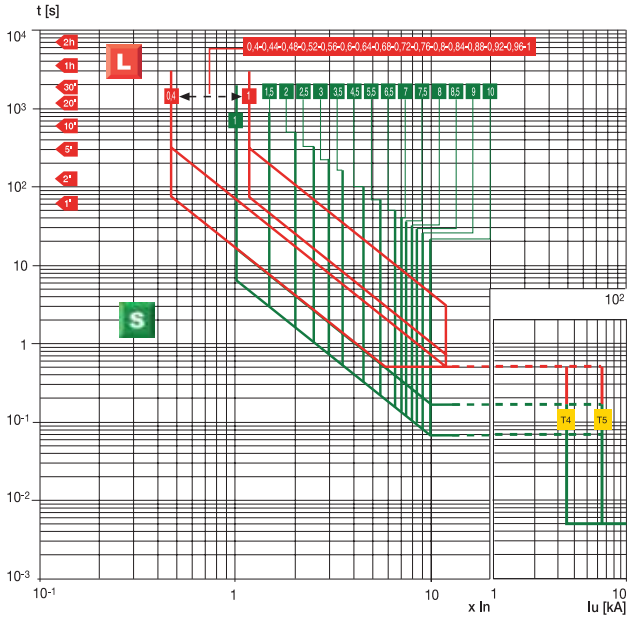

Tmax T for applications up to 1150V AC
Circuit-breakers with thermomagnetic trip units

T4 250 - TMA
In = 80÷250 A

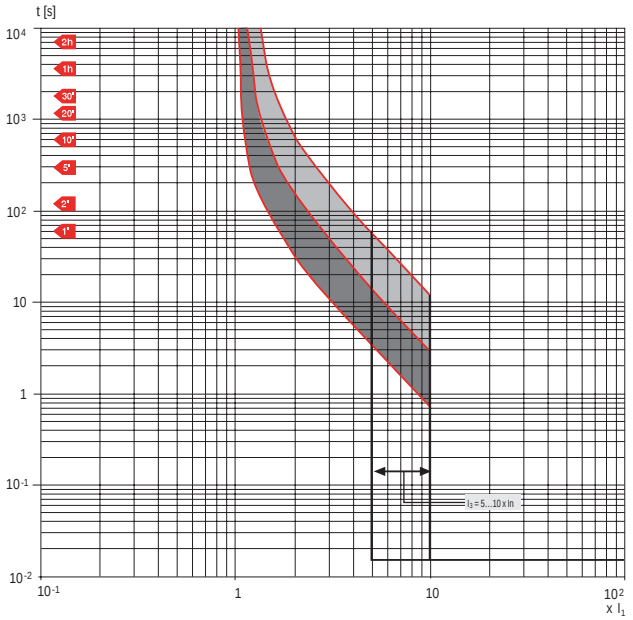

T5 400/630 - TMA
In = 320÷500 A

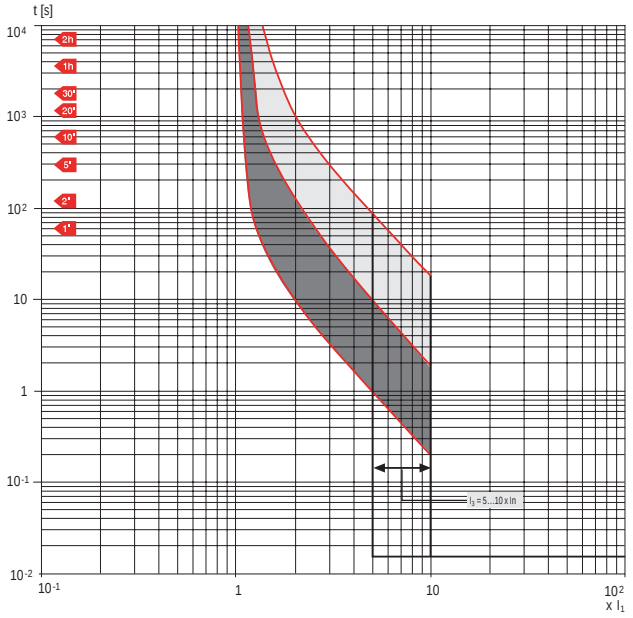

T6 630 - TMA
In = 630 A

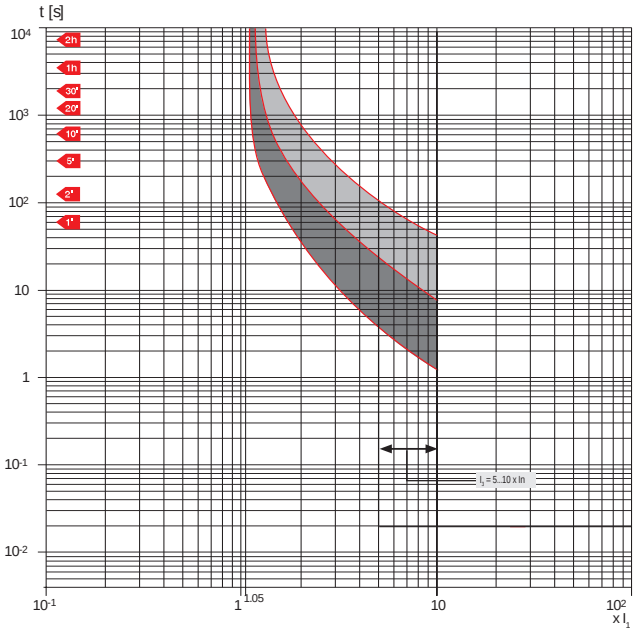

T6 800 - TM
In = 800 A

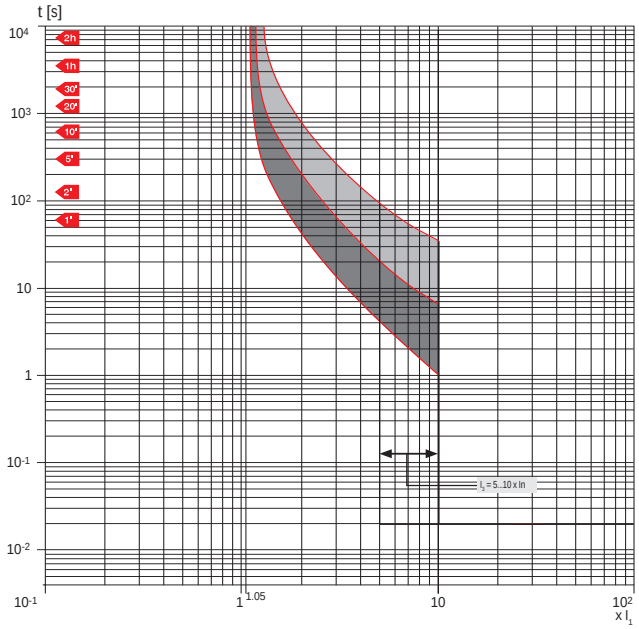

Characteristic curves

Trip curves for power distribution

Circuit-breakers with electronic trip units

T4 250/320 - T5 400/630 - T6 630/800/1000 PR221DS

L-I Functions

Note: For T4 In = 320 A, T5 In = 630 A and T6 In = 1000 A ⇒ I_3max = 9.5 x In

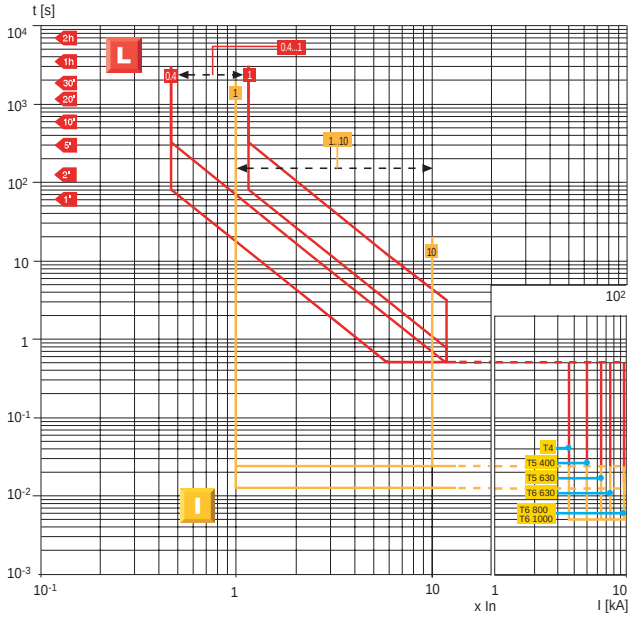

T4 250/320 - T5 400/630 - T6 630/800/1000 PR221DS

L-S Functions

Note: For T4 In = 320 A, T5 In = 630 A and T6 In = 1000 A ⇒ I_2max = 9.5 x In

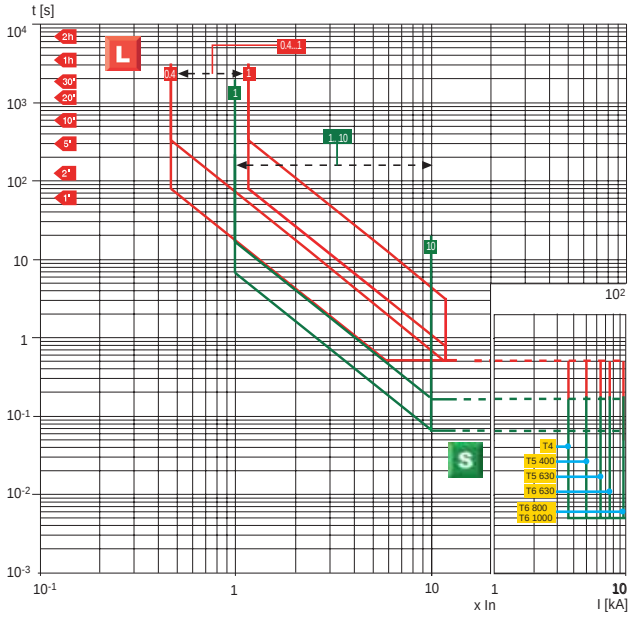

T4 250/320 - T5 400/630 - T6 630/800/1000 PR222DS - PR222DS/PD (T5, T6 Only)

L-S-I Functions

Note: The dotted curve of function L corresponds to the maximum delay (t1) which can be set at 6 x I_1, in the case where 320 A CTs are used for T4 and 630 A for T5. For all the CT sizes t_1 = 18s except with 320 A CT (T4), 630 A CT (T5) and 1000 A CT (T6) where t_1 = 10.5s. For T4 In = 320 A, T5 In = 630 A and T6 In = 1000 A ⇒ I_2max = 9.5 x In, I_3max = 9.5 x In. For T6 In = 800 A ⇒ I_3max = 10.5 x In.

For PR223DS the L protection function can be set to I_1 = 0.18...1 x In.

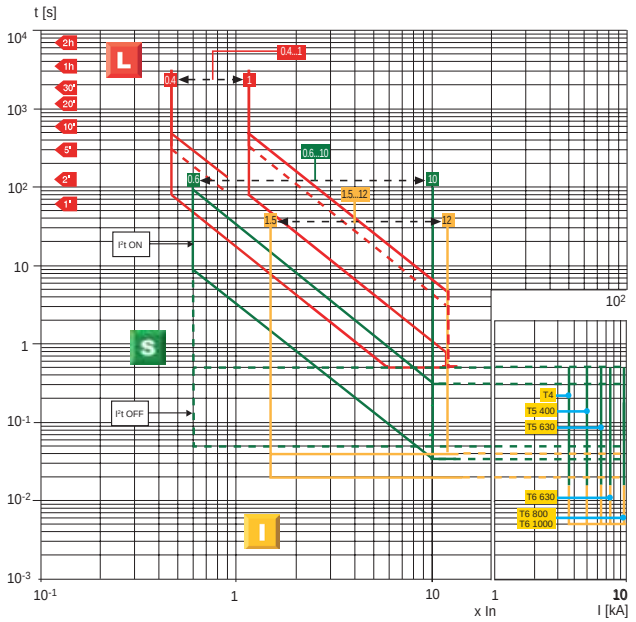

T4 250/320 - T5 400/630 - T6 630/800/1000 PR222DS - PR222DS/PD (T5, T6 Only)

G Function

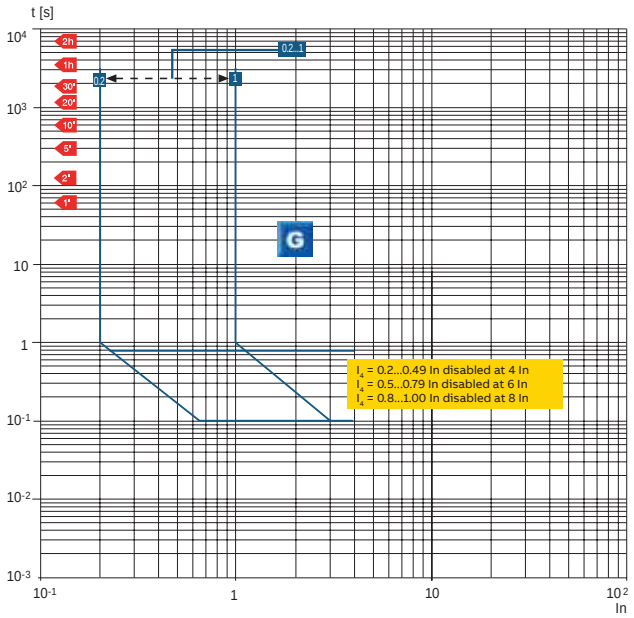

Circuit-breakers with Ekip M-LRIU electronic trip unit

T4 250 - T5 400 - T6 800 – Ekip M-LRIU
L Function (cold trip)

Hot trip *	5E	10E	20E	30E
Thermal memory reset time	320s	600s	1200s	2000s

* ask ABB for additional details

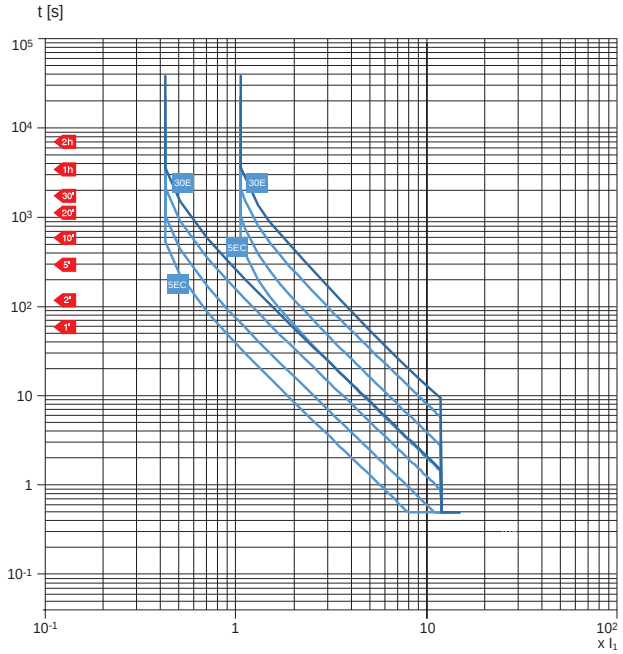

T4 250 - T5 400 - T6 800 – Ekip M-LRIU
R Function

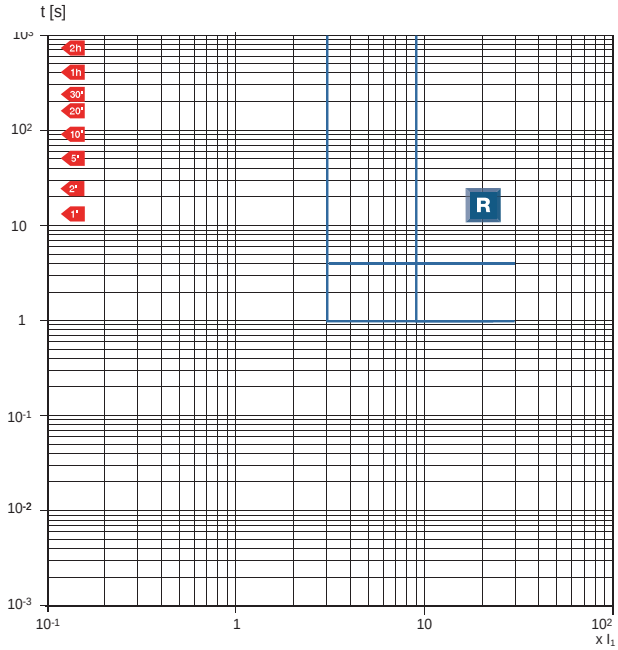

T4 250 - T5 400 - T6 800 – Ekip M-LRIU
I Function

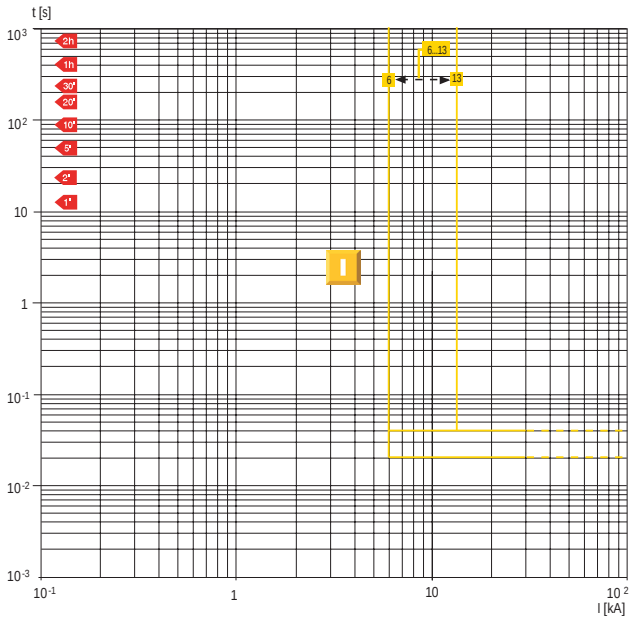

T4 250 -T5 400 - T6 800 – Ekip M-LRIU
U Function

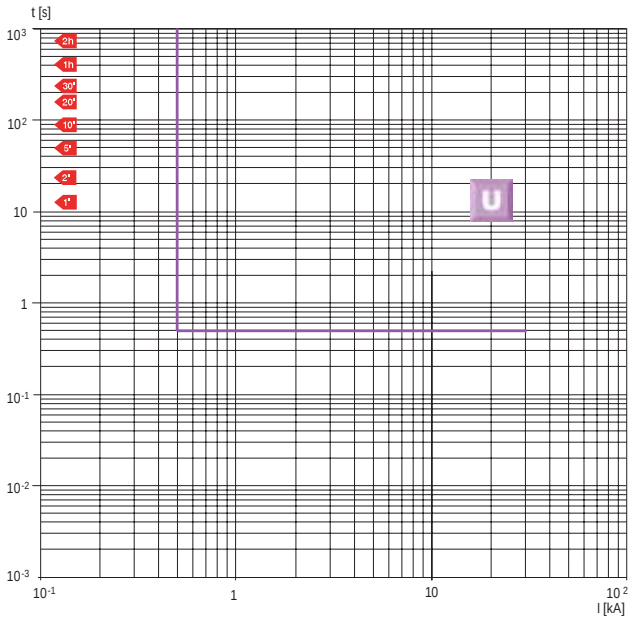

Specific let-through energy curves

Circuit Breakers for DC applications ≥1000V DC - IEC

T4 250

1000V

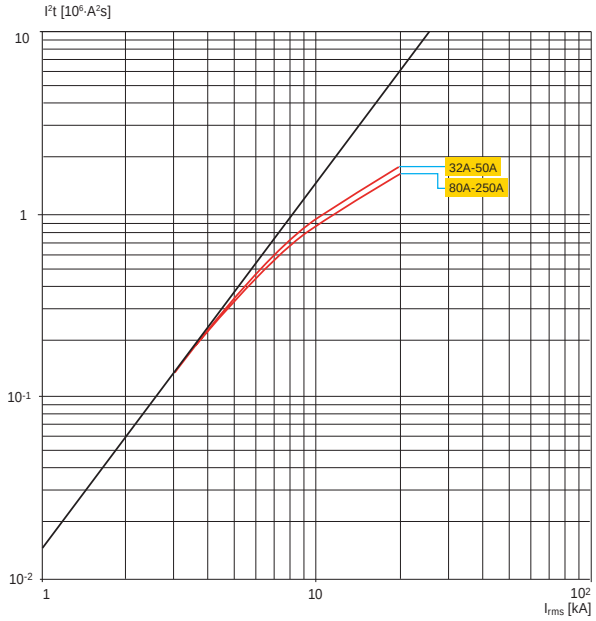

T5 400/630

1000V

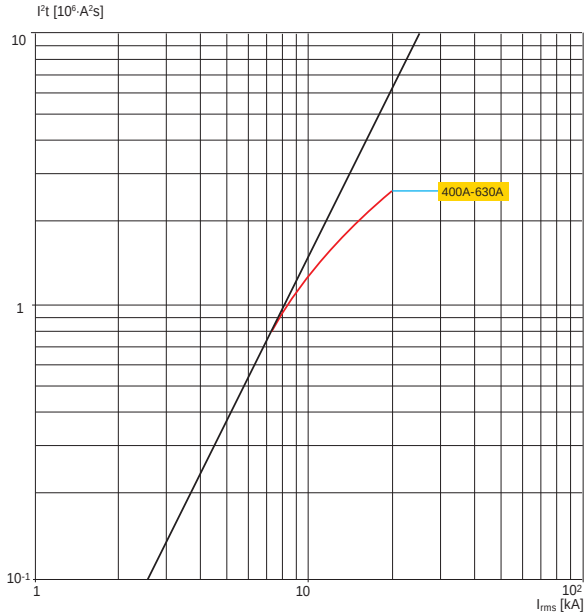

T6

1000V

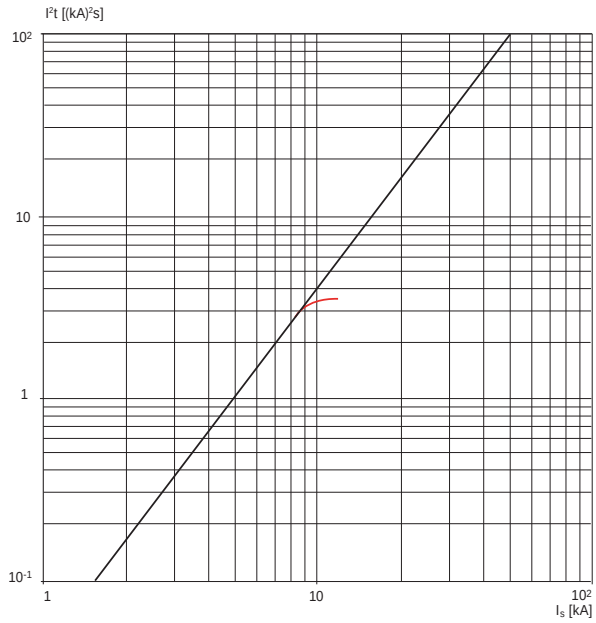

T4N/PV-E

@ 1500V tau = 1ms

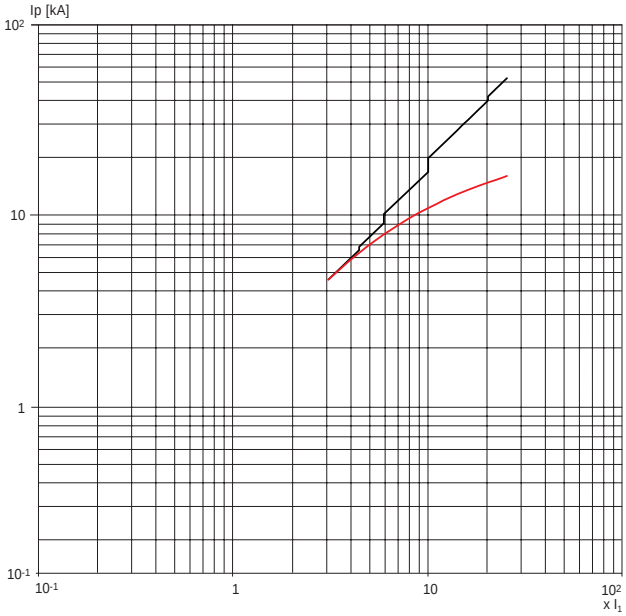

T4N/PV-E

@ 1500V tau = 5ms

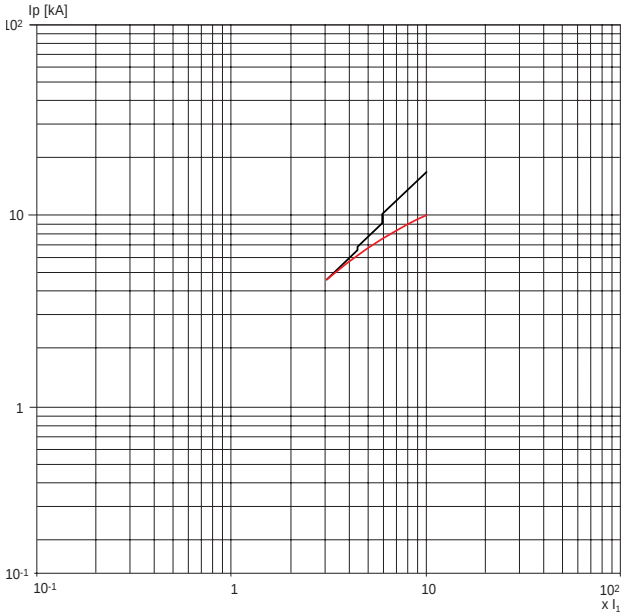

Circuit breaker for AC applications ≥800V AC
Tmax T-HA for applications up to 800V AC

T4-HA

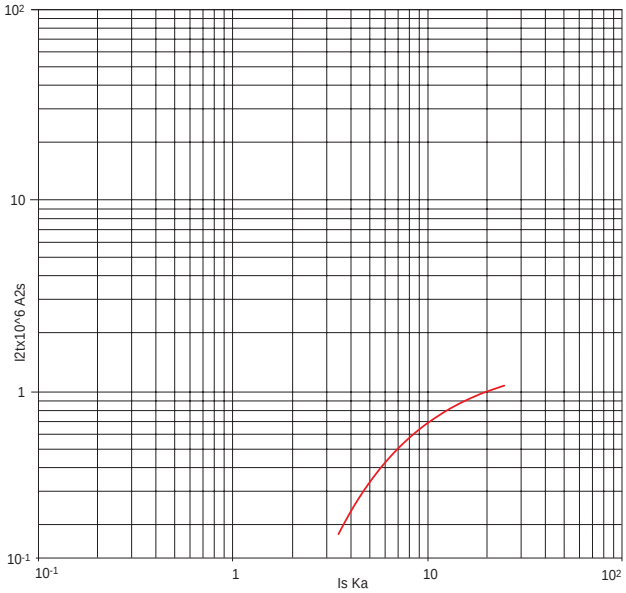

T5-HA

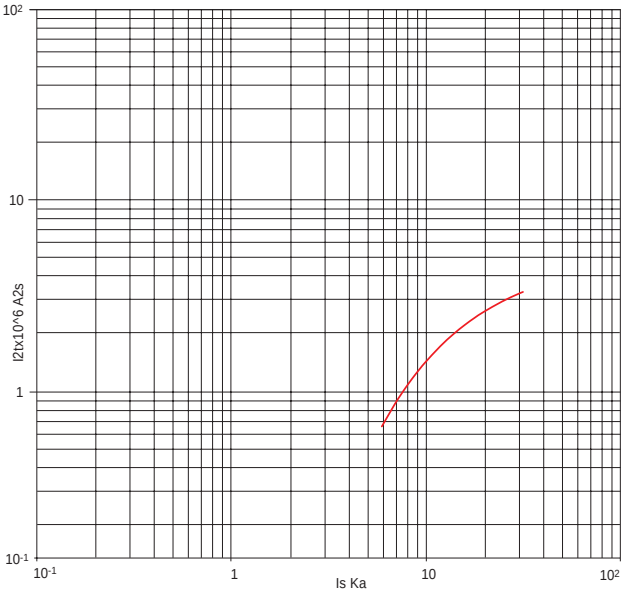

Specific let-through energy curves

Tmax T for applications up to 1150V AC

T4 250
1000V

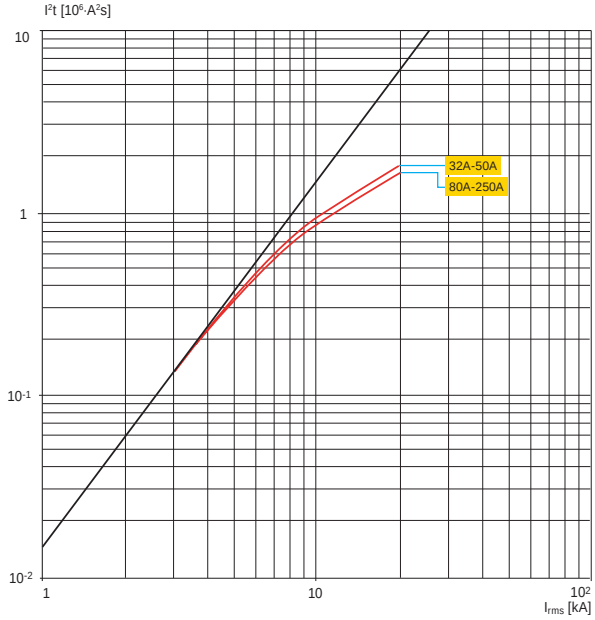

T6
1000V

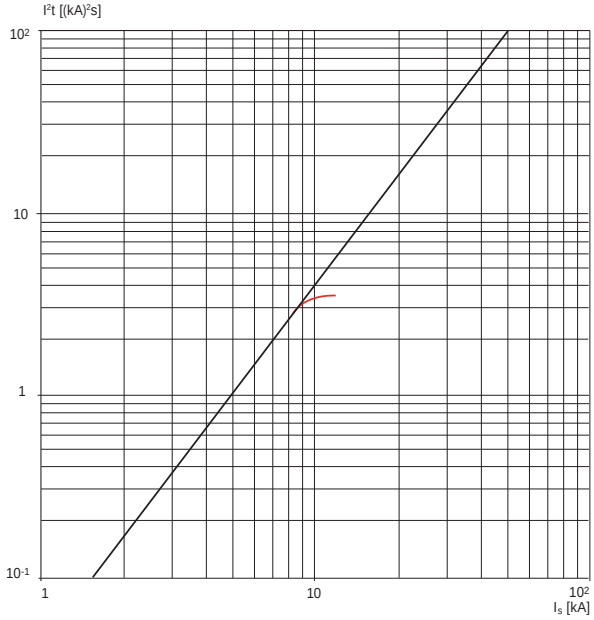

T5 400/630
1000V

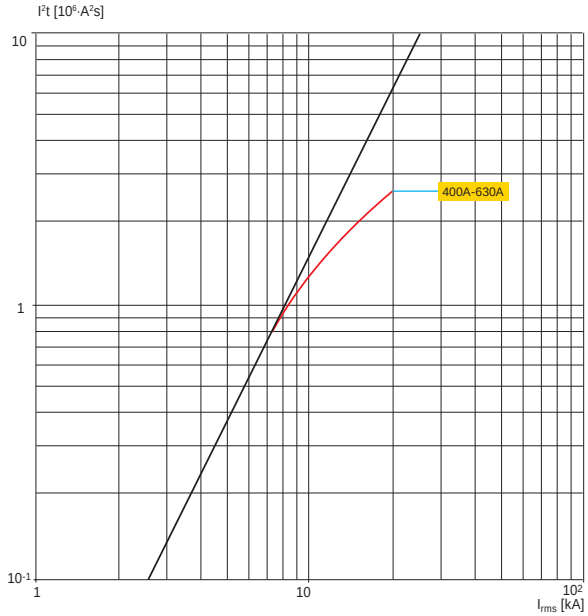

T4 250
1150V

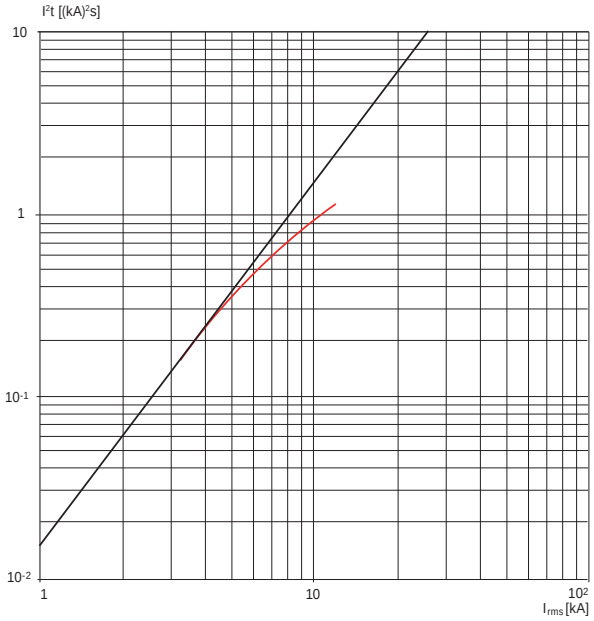

Tmax T for applications up to 1150V AC

T5 400/630

1150V

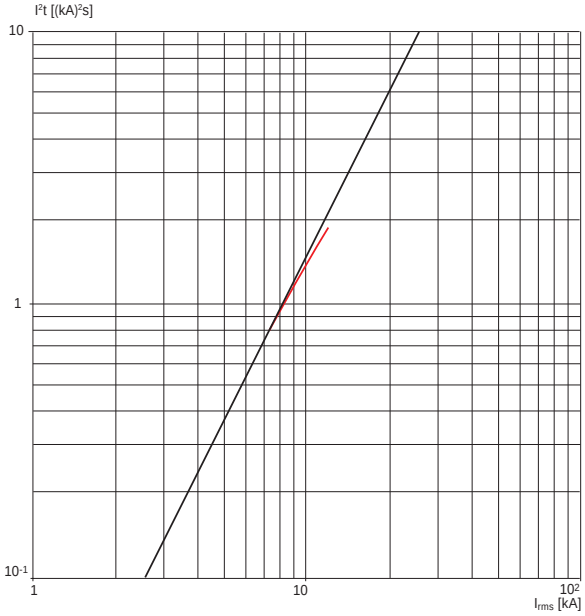

Specific let-through energy curves

Circuit Breakers for DC applications ≥1000V DC - IEC

T4 250
1000V

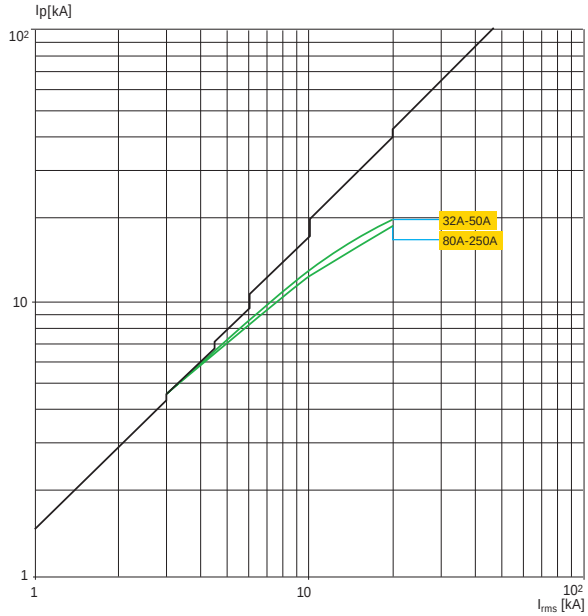

T5 400/630
1000V

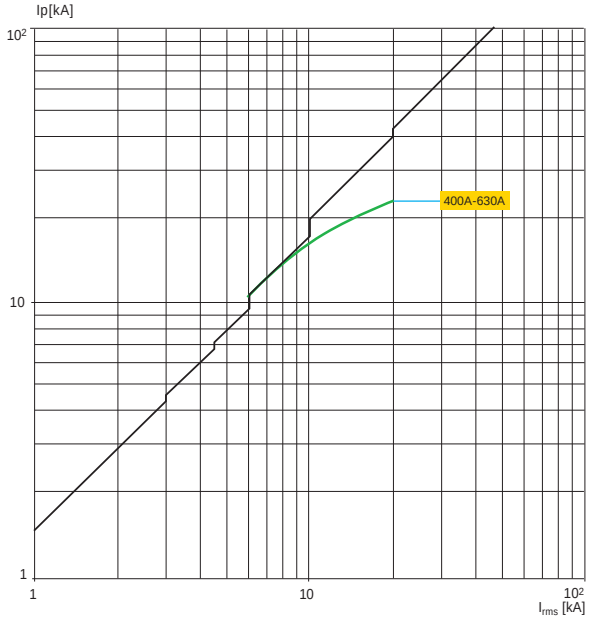

T6
1000 V

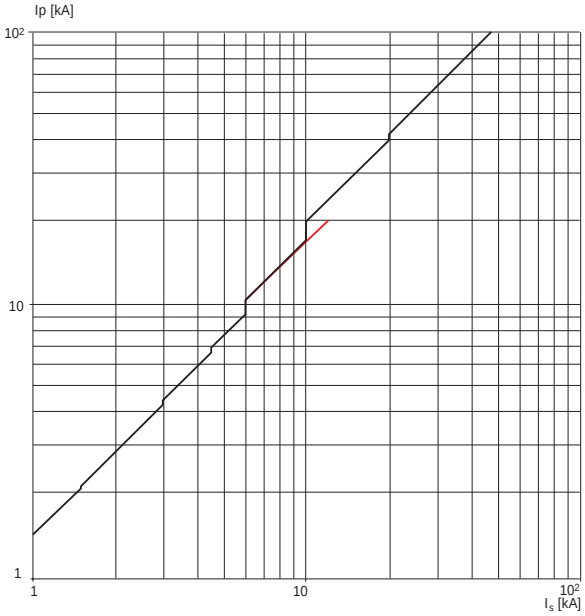

T4N/PV-E

@ 1500V tau = 1ms

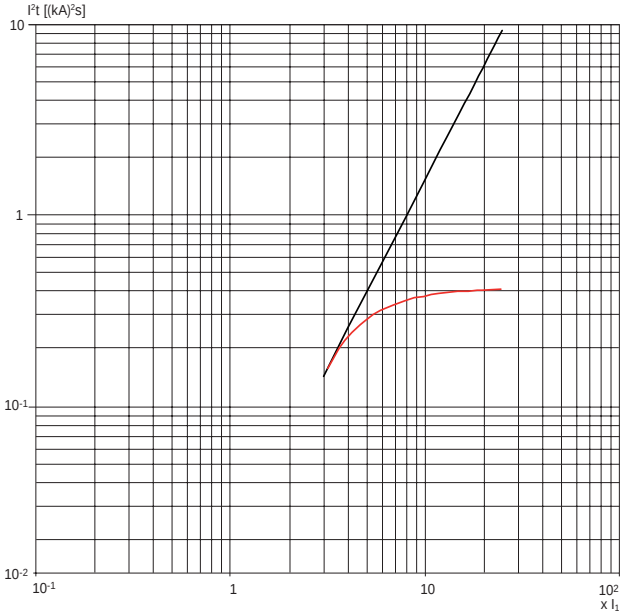

T4N/PV-E

@ 1500V tau = 5ms

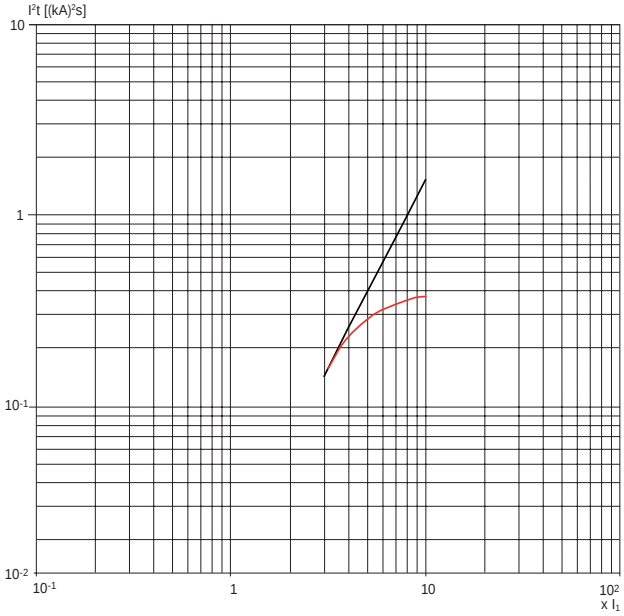

Circuit breaker for AC applications ≥800V AC
Tmax T-HA for applications up to 800V AC

T4-HA

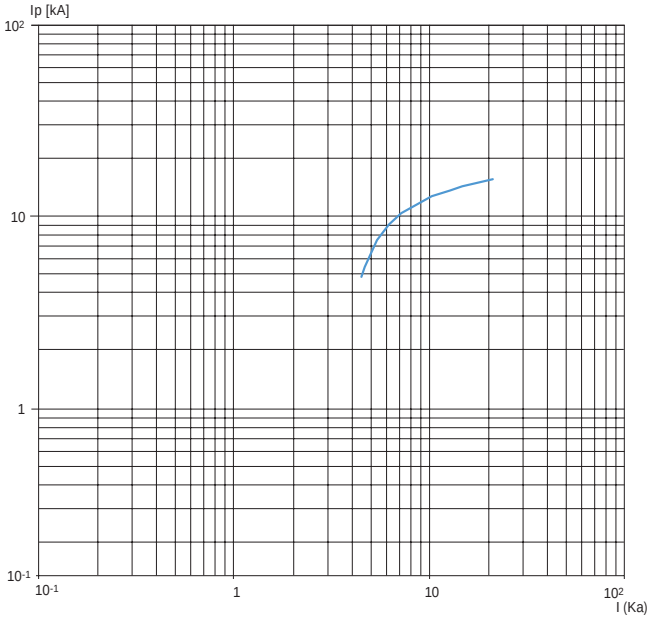

T5-HA

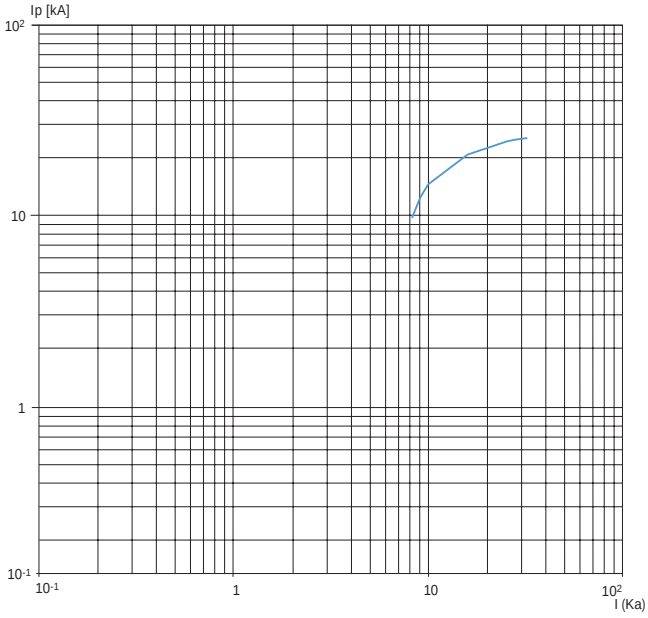

Specific let-through energy curves

Tmax T for applications up to 1150V AC

T4 250
1000V

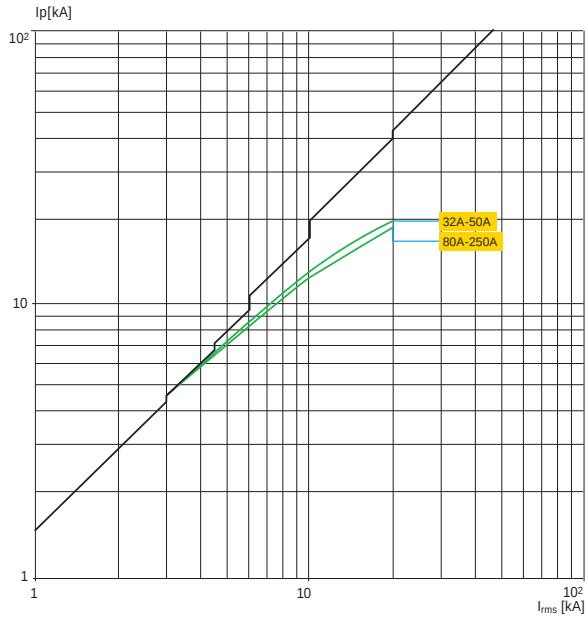

T5 400/630
1000V

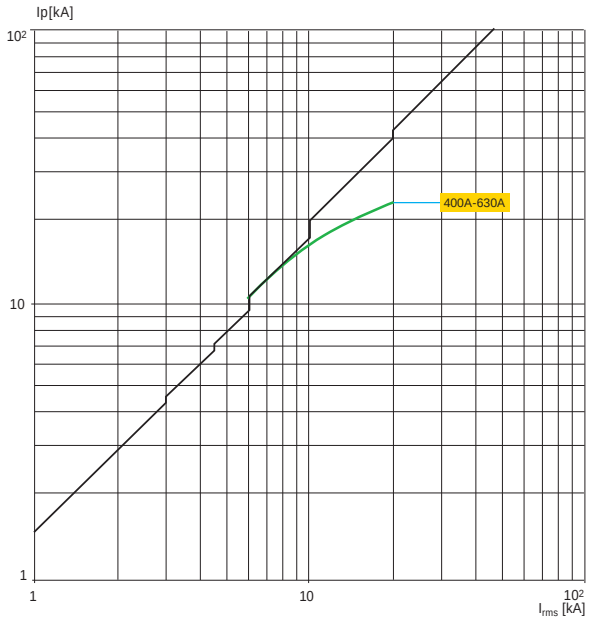

T6
1000V

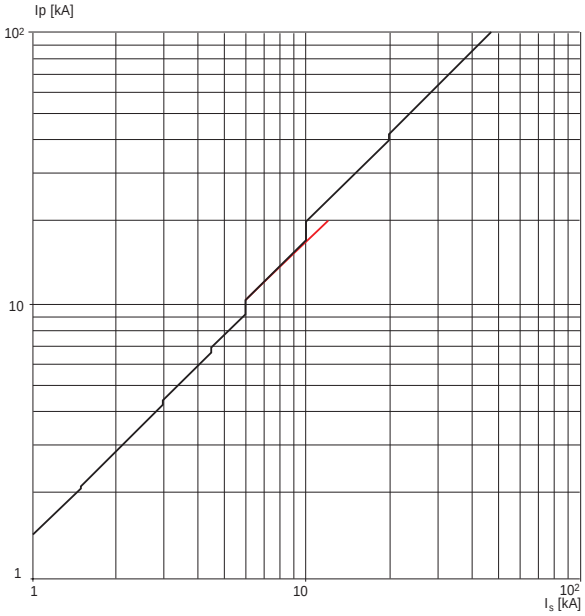

T4 250
1150V

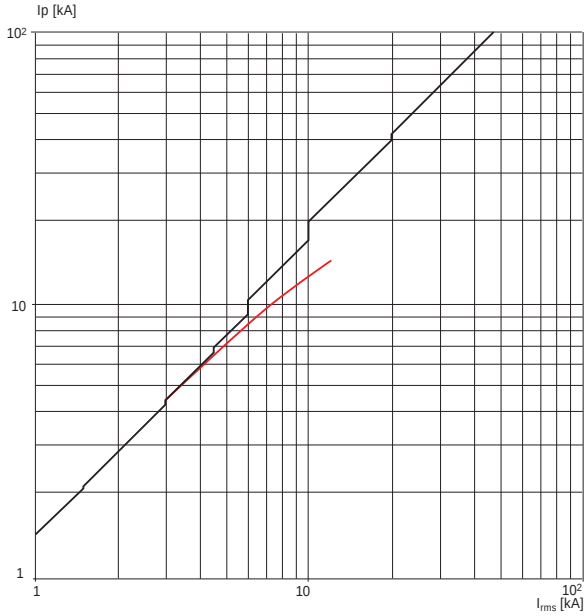

T5 400/630

1150V

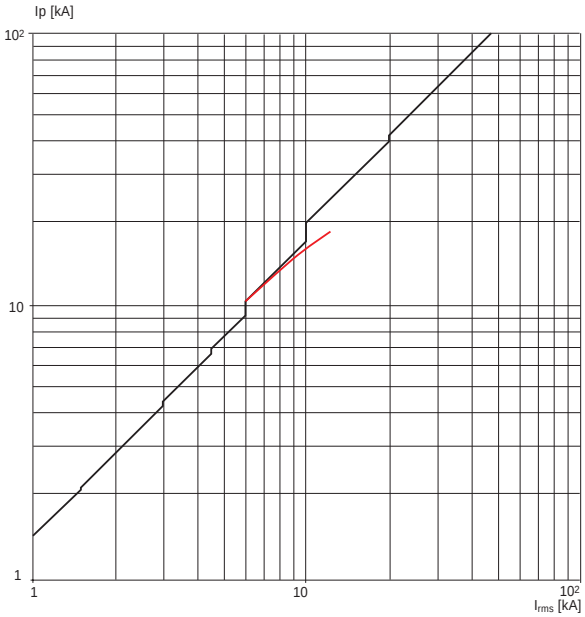

08

OVERALL DIMENSIONS

8/2 **Dimensions of Tmax PV and Tmax PV-E with jumpers - IEC**

8/5 **Dimensions of Tmax PV and Tmax PV-E with jumpers - UL**

8/7 **Dimensions of all other frames**

8/7 Fixed circuit-breaker and terminals

8/18 Plug-in circuit-breaker and terminals

8/24 Withdrawable circuit-breaker and terminals

8/31 Accessories

Dimensions of Tmax PV and Tmax PV-E with jumpers - IEC

T4D/PV - T4D/PV-E

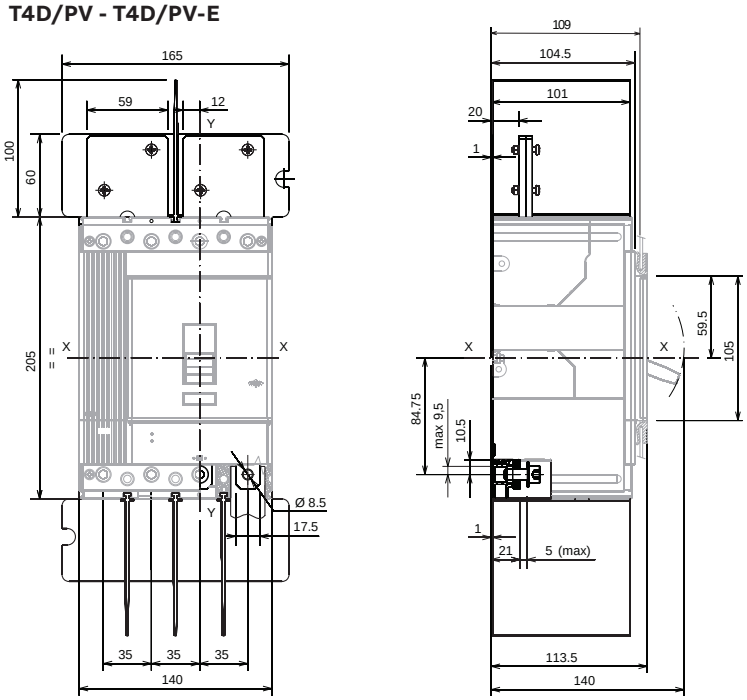

Installation instructions code 1SDH000779R0002 for other configurations and supply

T4N/PV-E

τ = 1ms

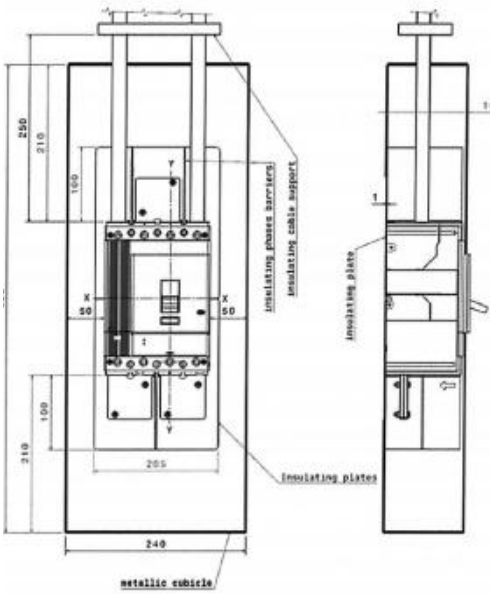

τ = 5ms

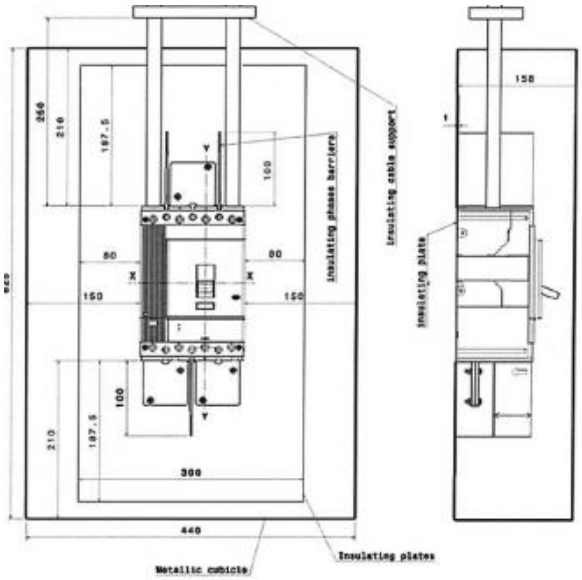

Installation instructions code 1SDH000779R0004 for other configurations and supply

T5D/PV

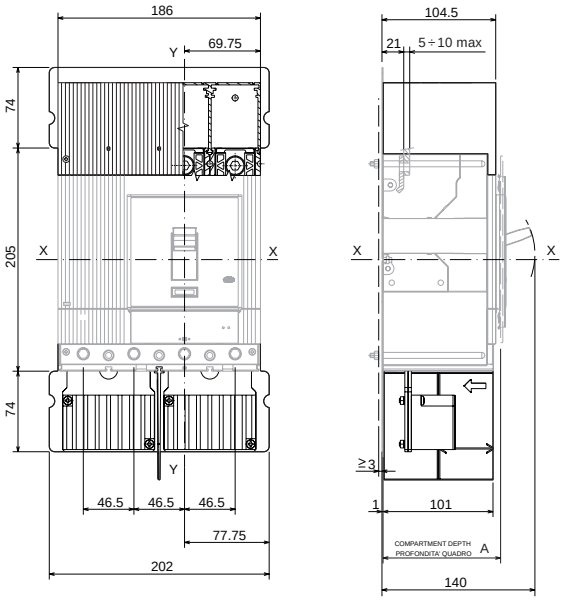

Installation instructions code 1SDH000780R0002 for other configurations and supply

T5D/PV-E

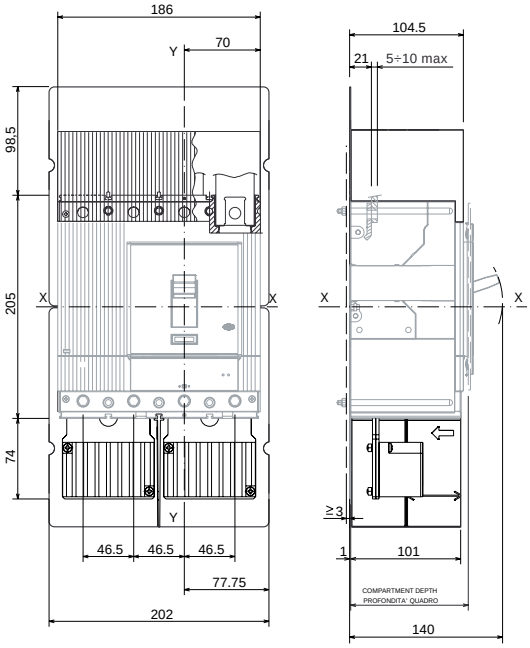

Installation instructions code 1SDH000780R0004 for other configurations and supply

Dimensions of Tmax PV and Tmax PV-E with jumpers - IEC

T6D/PV

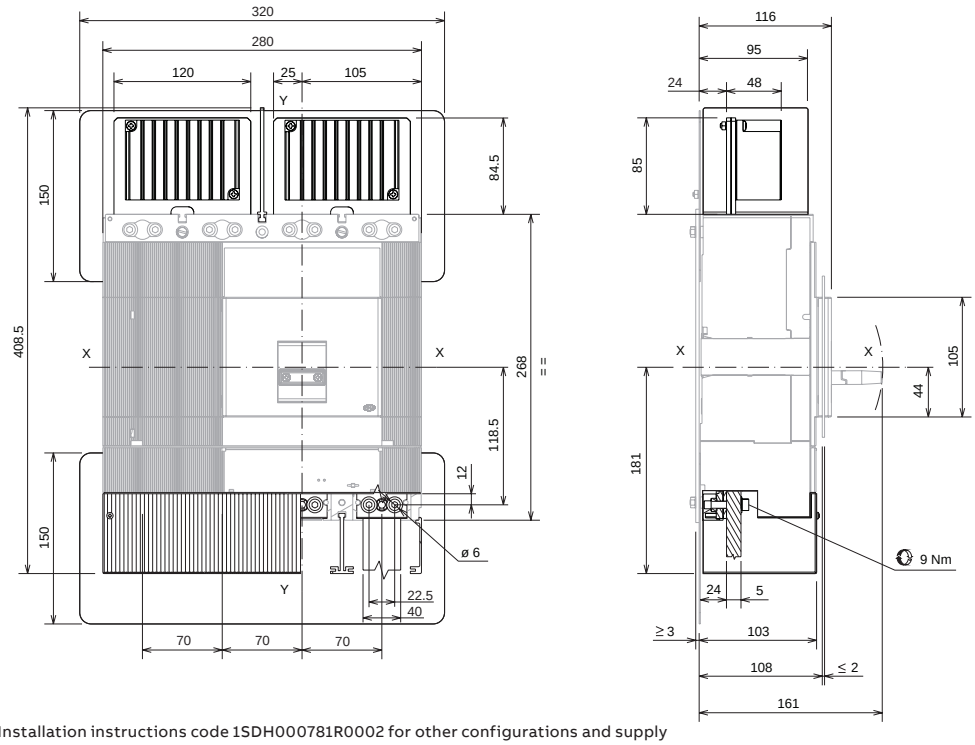

Installation instructions code 1SDH000781R0002 for other configurations and supply

T7D - T7D/PV-E

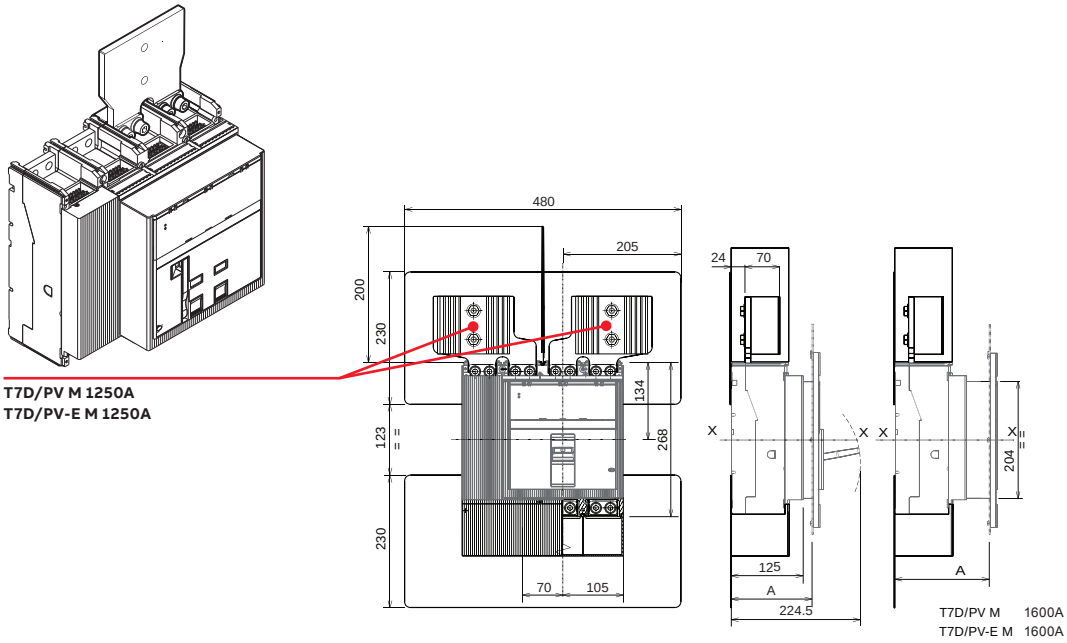

T7D/PV M 1250A
T7D/PV-E M 1250A

Installation instructions code 1SDH000789R0002, other configurations and supply

Dimensions of Tmax PV and Tmax PV-E with jumpers - UL

T4N-D/PV - T4N/PV

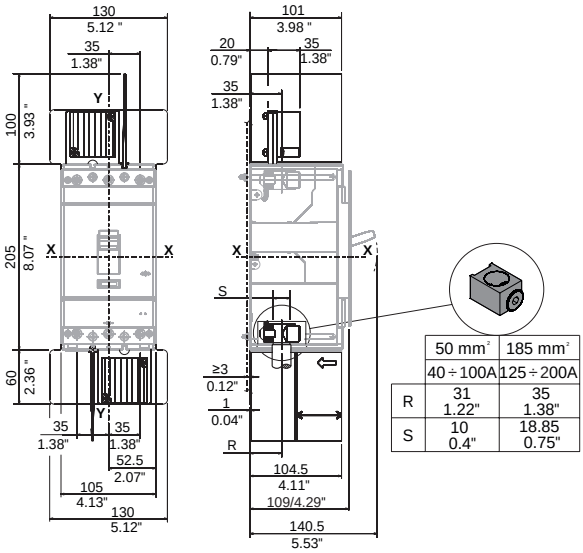

	50 mm²	185 mm²
	40 ÷ 100A	125 ÷ 200A
R	31 1.22"	35 1.38"
S	10 0.4"	18.85 0.75"

Installation instructions code 1SDH000779R0003 for other configurations and supply

T5N-D/PV - T5V/PV

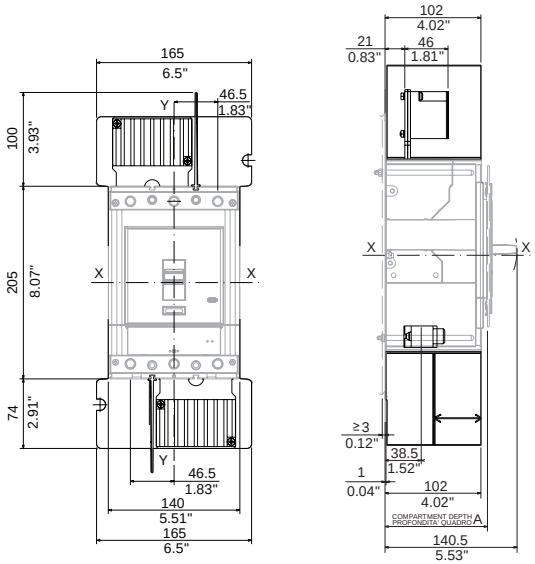

Installation instructions code 1SDH000780R0003 for other configurations and supply

Dimensions of Tmax PV and Tmax PV-E with jumpers - UL

T6N-D/PV - T6N/PV

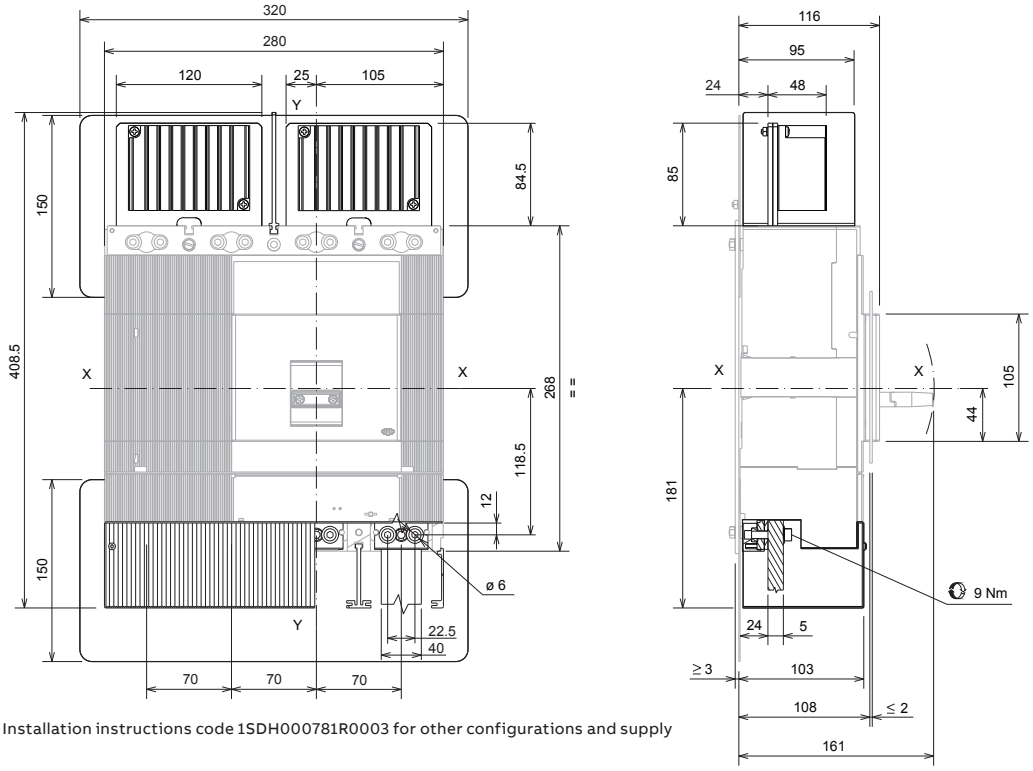

Installation instructions code 1SDH000781R0003 for other configurations and supply

T7N-D/PV - T7N-D/PV-E

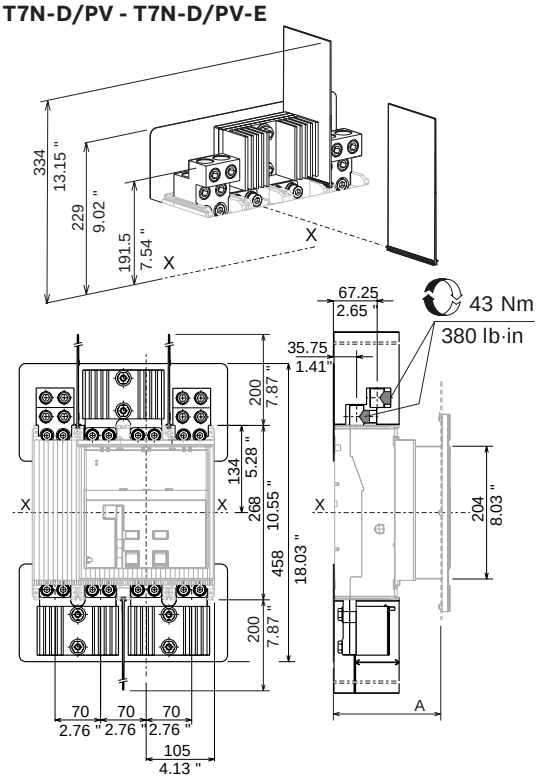

Installation instructions code 1SDH000789R0003 for other configurations and supply

Dimensions of other frames - Tmax T4

Fixed circuit-breaker

O1 Overall dimensions with cabled accessories mounted (SOR-C, UVR-C, RC222-223)
O2 Overall dimensions with cabled auxiliary contacts mounted (only 3Q 1SY)

Fixing on sheet

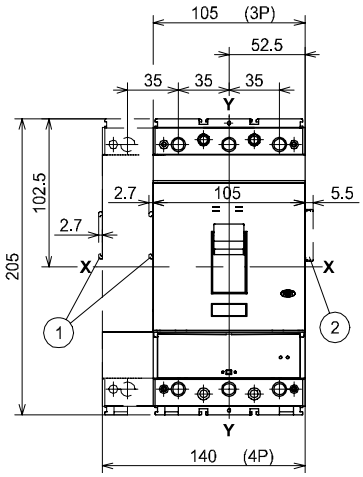

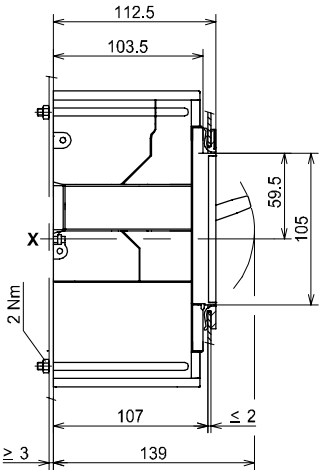

Flange for compartment door

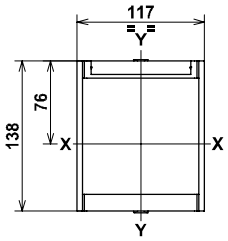

Drilling templates of the compartment door

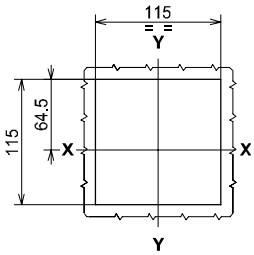

3-4 POLES

With flange

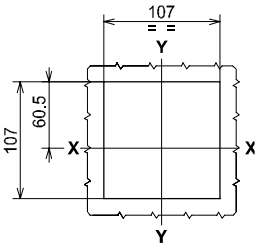

3-4 POLES

Without flange

Drilling templates for support sheet

For front terminals

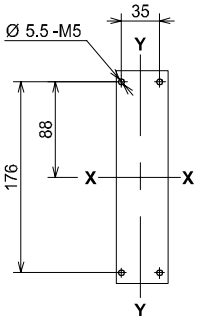

3 POLES

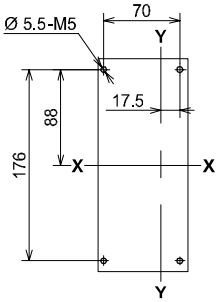

4 POLES

For rear terminals

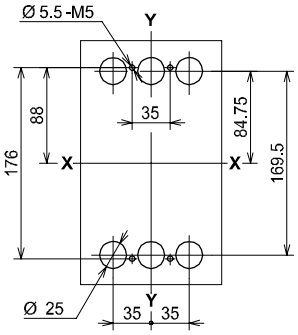

3 POLES

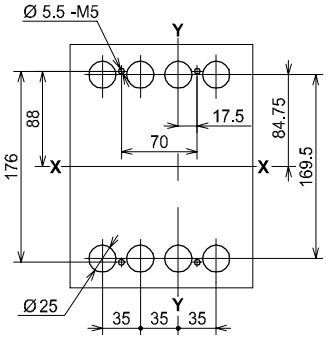

4 POLES

Dimensions of other frames - Tmax T4

Terminals

Front - F

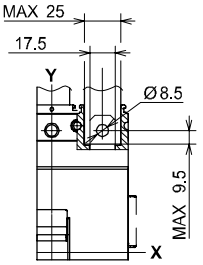

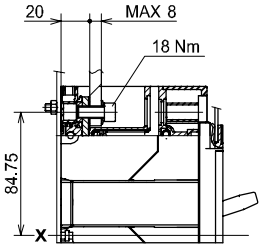

Front for copper cables - FC Cu

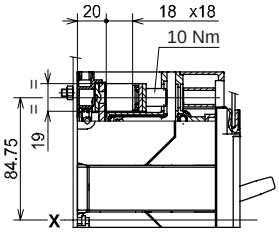

Front for copper/aluminium cables - FC CuAl

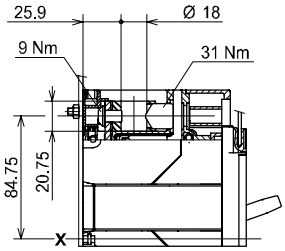

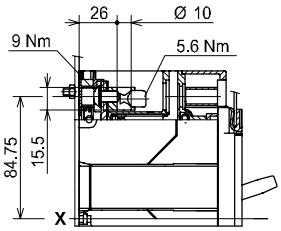

Front multicable - MC

1 Front terminals for cable connection 2x150 mm²
2 Front terminals for multicable connection
3 High terminal covers with degree of protection IP40

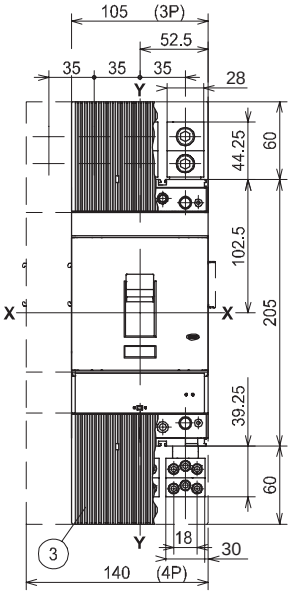

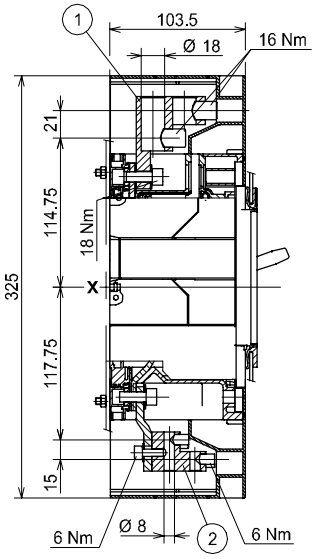

Front extended spread - ES

1 Insulating barriers between phases (compulsory)

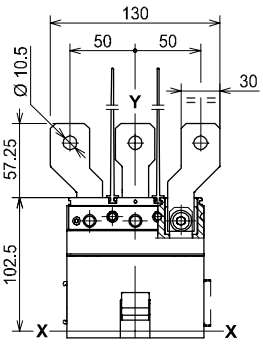

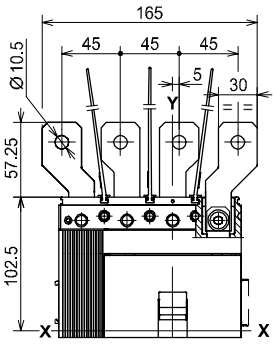

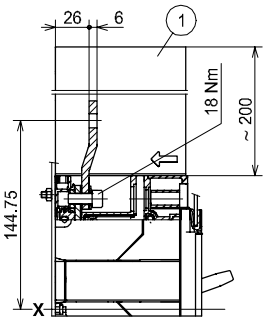

Front extended - EF

1 High terminal covers with degree of protection IP40
2 Insulating barriers between phases (compulsory without 1)

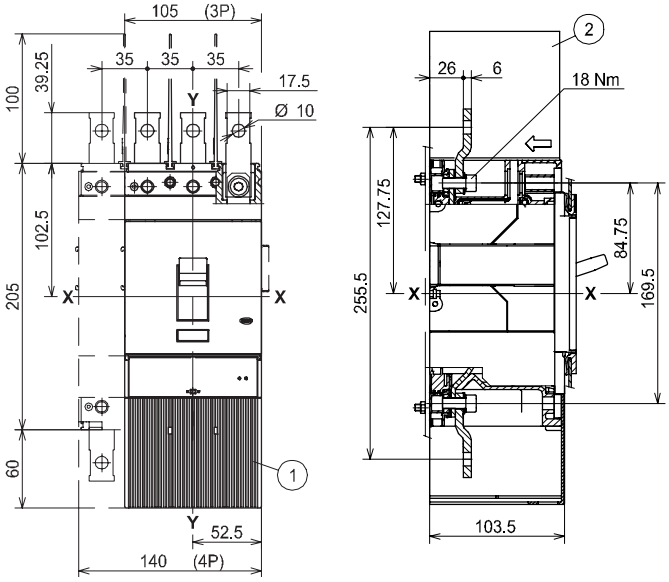

Rear horizontal - R

1 Low terminal covers with degree of protection IP40

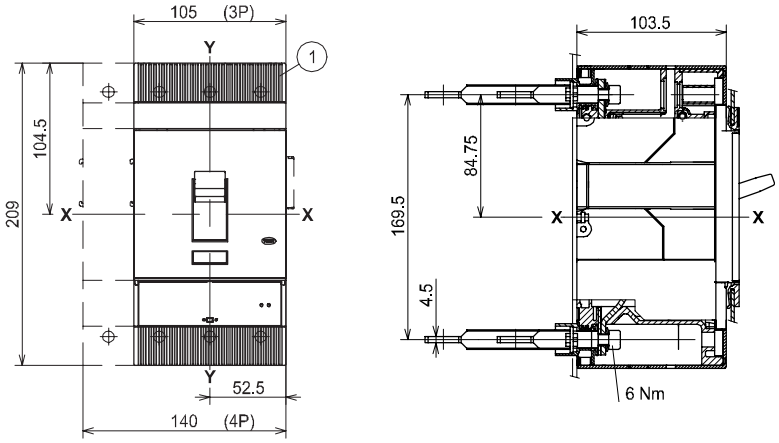

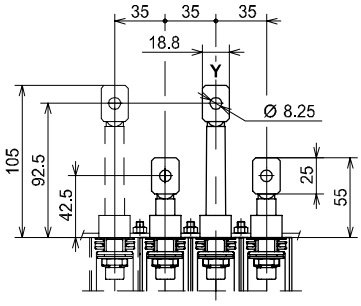

Dimensions of other frames - Tmax T5

Fixed circuit-breaker

1 Overall dimensions with cabled accessories mounted (SOR-C, UVR-C, RC222)
2 Overall dimensions with cabled auxiliary contacts mounted (only 3Q 1SY)

Fixing on sheet

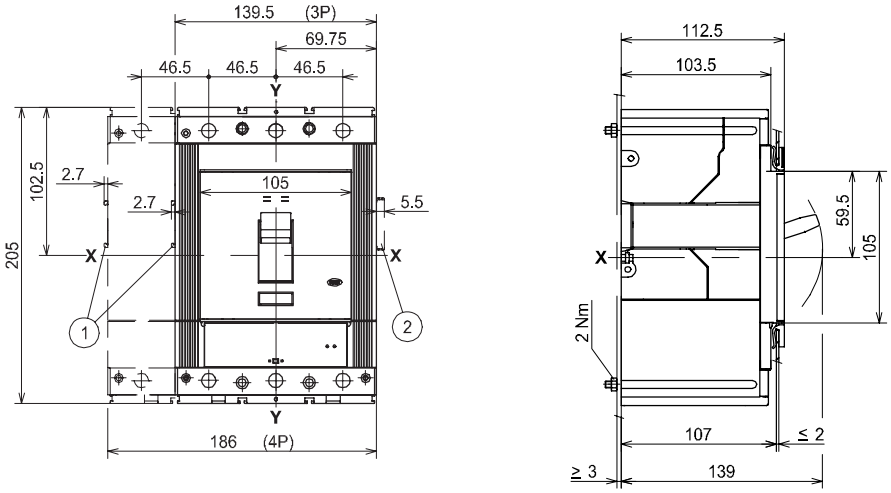

Flange for compartment door

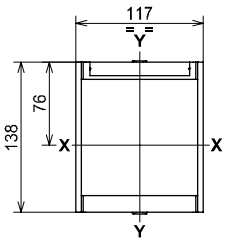

Drilling templates of the compartment door

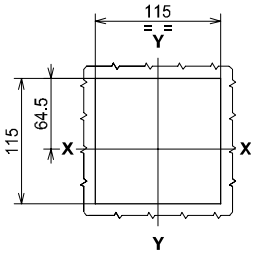

With flange
(3-4 POLES)

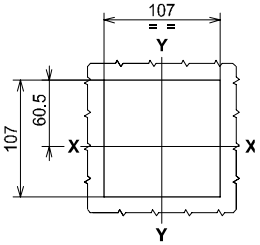

Without flange
(3-4 POLES)

Drilling templates for support sheet

For front terminals

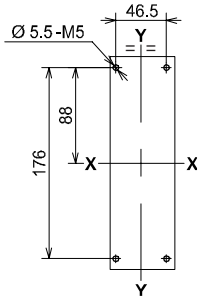

3 POLES

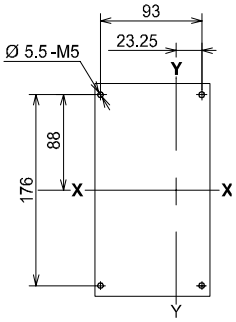

4 POLES

For rear terminals

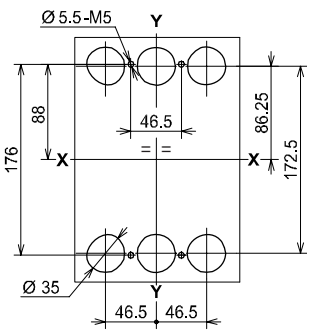

3 POLES

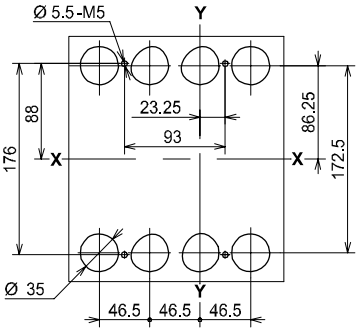

4 POLES

Dimensions of other frames - Tmax T5

Terminals

Front - F

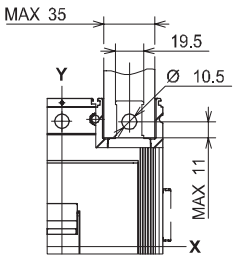

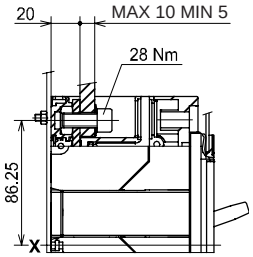

Front for copper cables - FC Cu

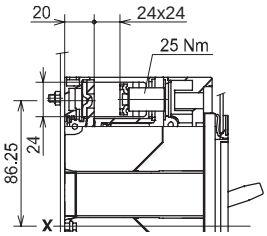

Front for copper/aluminium cables - FC CuAl

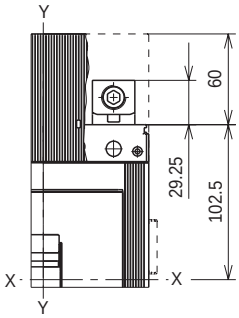

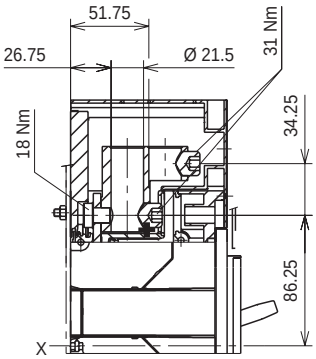

Front for copper/aluminum cables - FC CuAl 2x120 mm²

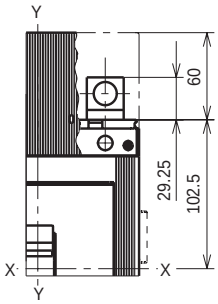

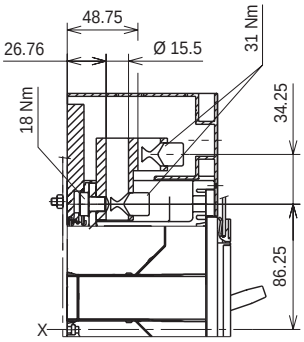

Front for copper/aluminum cables - FC CuAl 1x240 mm²

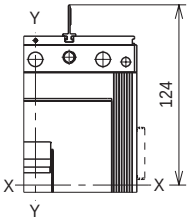

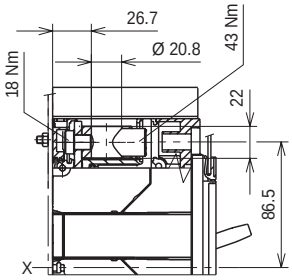

Front for copper/aluminium cables - FC CuAl 300 mm²

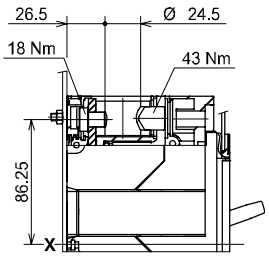

Front for copper/aluminium cables - FC CuAl 2x240 mm²

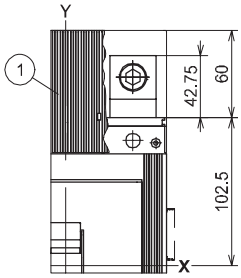

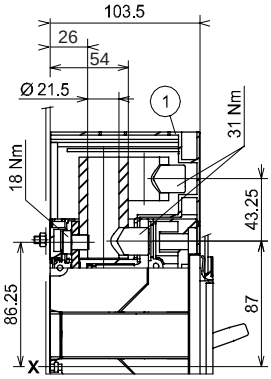

1 High terminal covers with degree of protection IP40

Dimensions of other frames - Tmax T5

Terminals

Front extended spread - ES

1 High terminal covers with degree of protection IP40

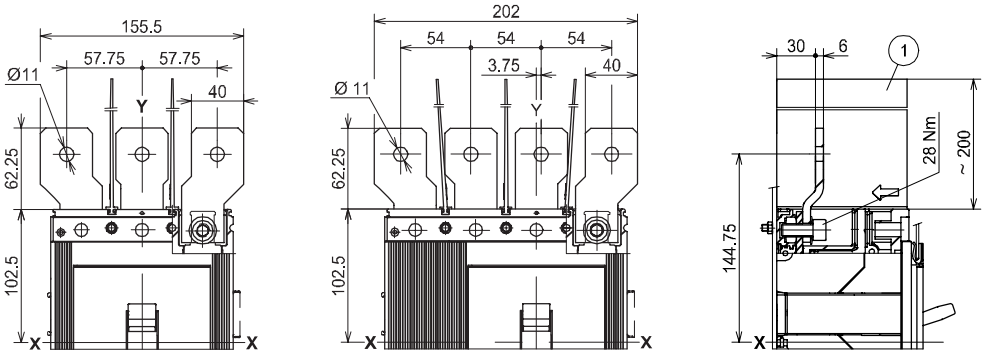

Front extended - EF

1 High terminal covers with degree of protection IP40
2 Insulating barriers between phases (compulsory without 1)

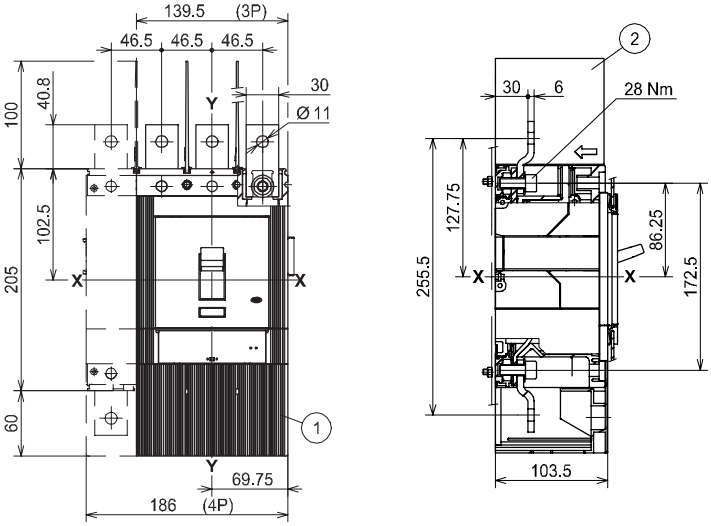

Rear horizontal - R

1 Low terminal covers with degree of protection IP40

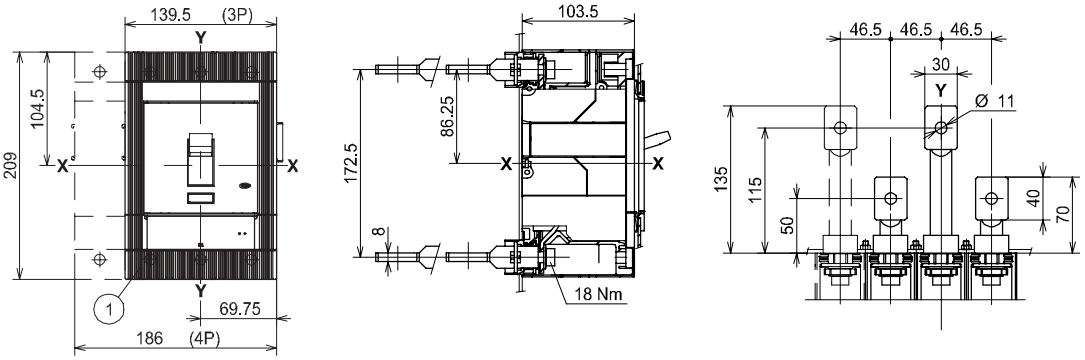

Dimensions of other frames - Tmax T6

Fixed circuit-breaker

1 Overall dimensions with cabled accessories mounted (SOR-C, UVR-C)
2 Overall dimensions with cabled auxiliary contacts mounted (only 3Q 1SY)

Fixing on sheet

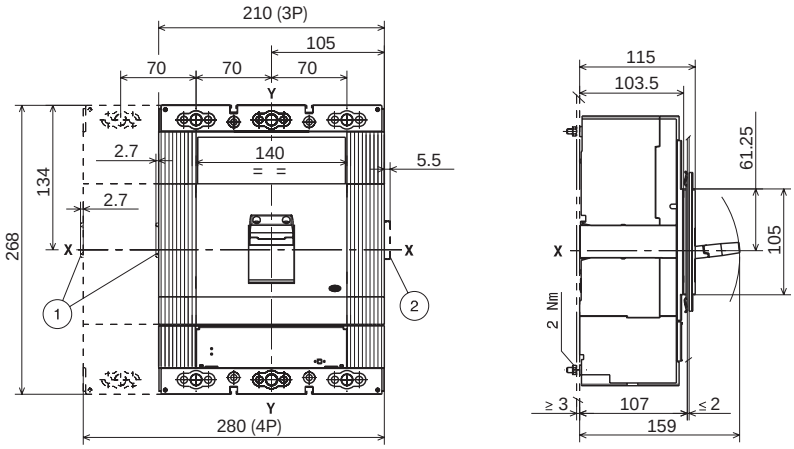

Flange for the compartment door

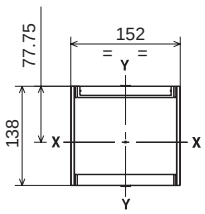

Drilling templates of the compartment door

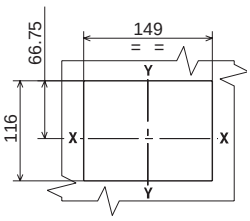

With flange 3-4 POLES

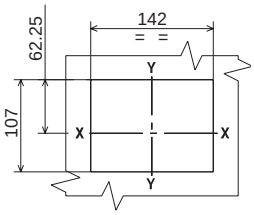

Without flange 3-4 POLES

Drilling templates for support sheet

For front terminals F, EF, ES, FC Cu, FC CuAl

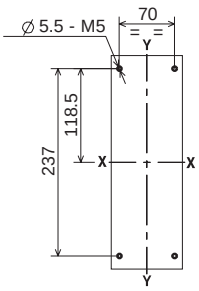

3 POLES

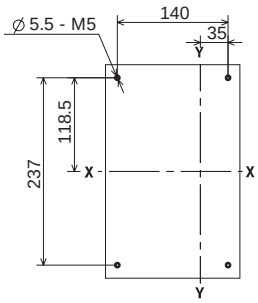

4 POLES

Dimensions of other frames - Tmax T6

Fixed circuit-breaker

Drilling templates for support sheet

For rear terminals for copper/aluminium cables - RC CuAl

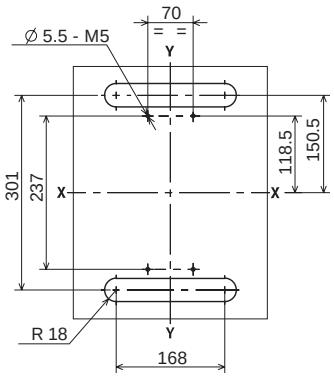

630 A (3 POLES)

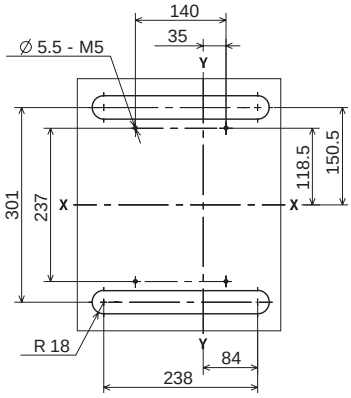

630 A (4 POLES)

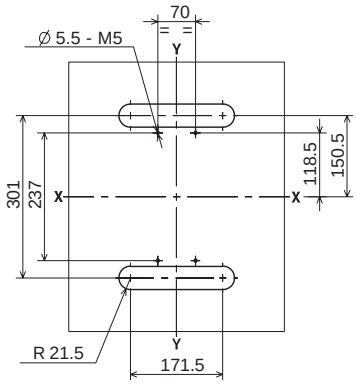

800 A (3 POLES)

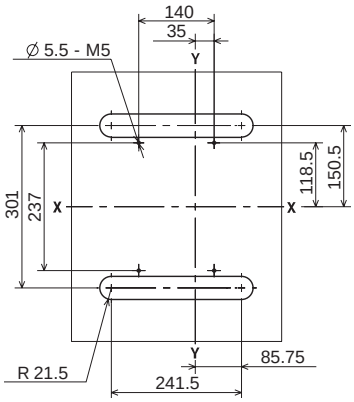

800 A (4 POLES)

For rear terminals - R

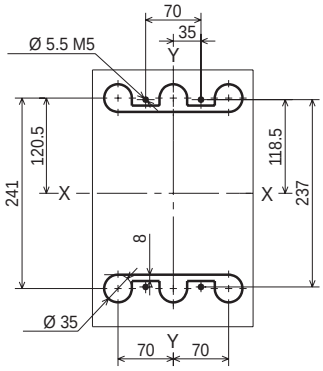

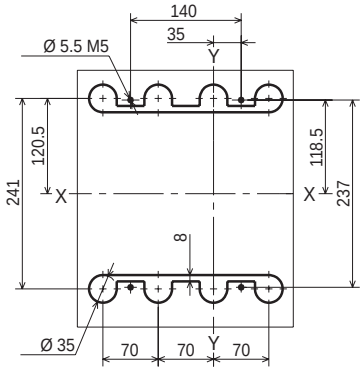

Dimensions of other frames - Tmax T6

Terminals

Front - F

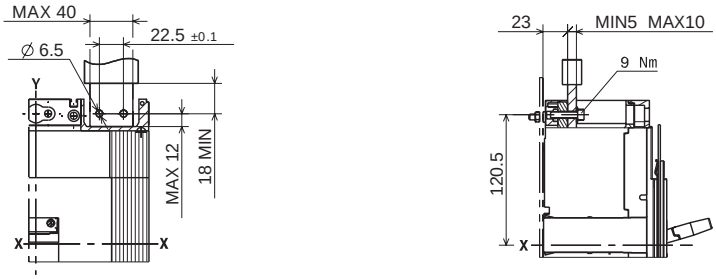

Front for copper/aluminium cables - FC CuAl 2x240 mm²

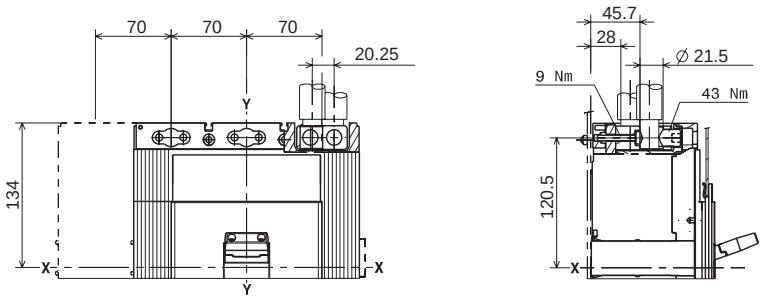

630 A

Front for copper/aluminium cables - FC CuAl 3x185 mm²

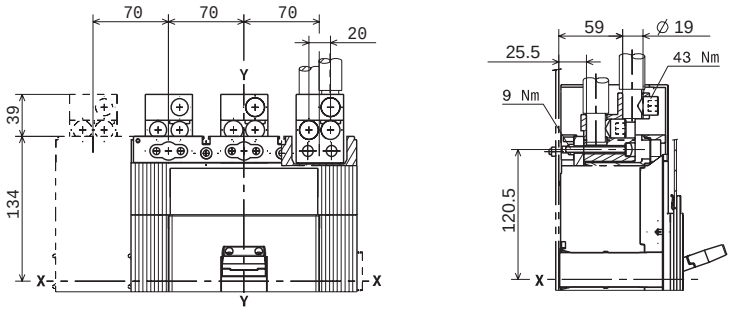

800 A

Front for copper/aluminium cables - FC CuAl 4x150 mm²

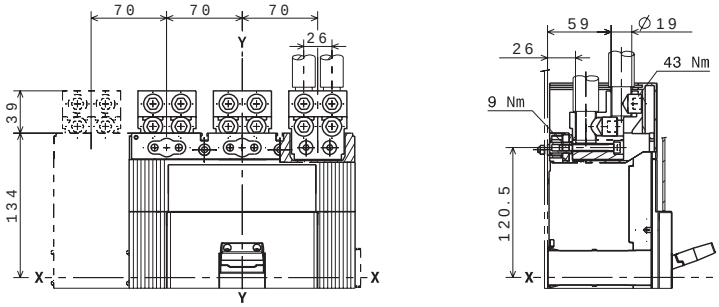

1000 A

Dimensions of other frames - Tmax T6

Terminals

Front extended - EF

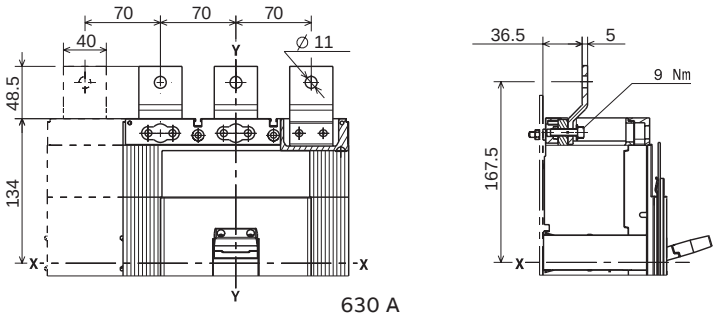

630 A

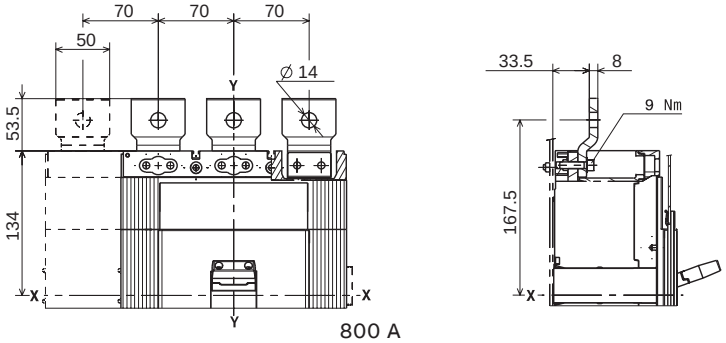

800 A

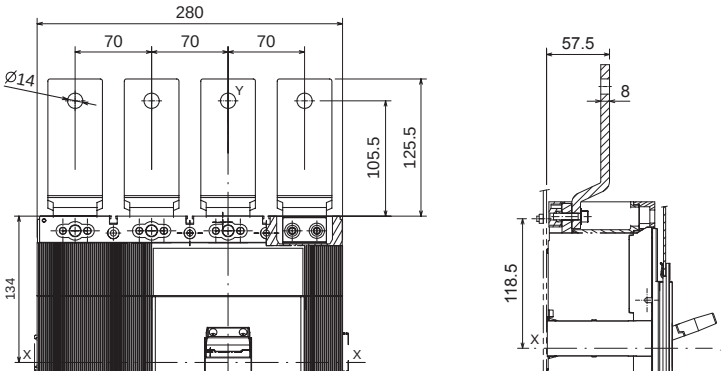

1000 A

Front extended spread - ES

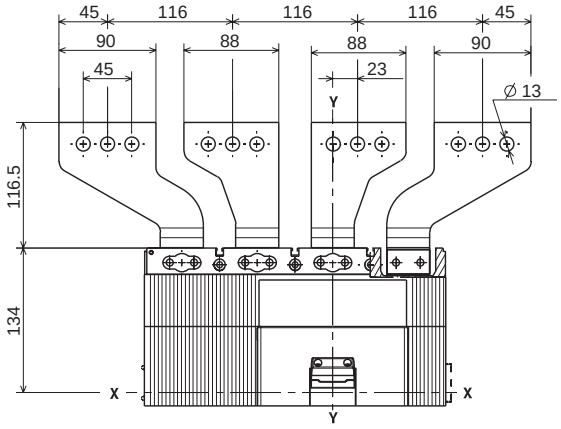

4 POLES

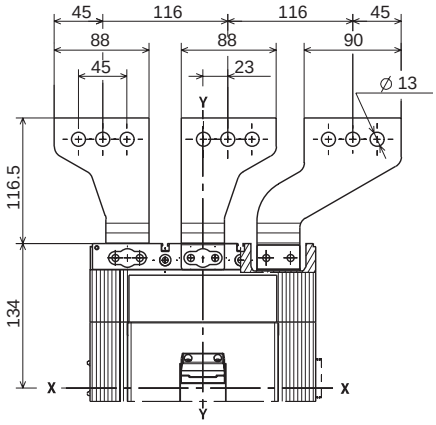

3 POLES

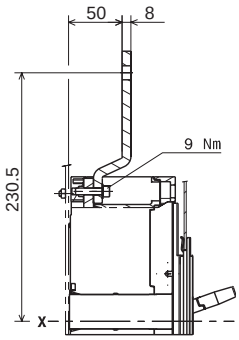

Rear for copper/aluminium cables - RC CuAl

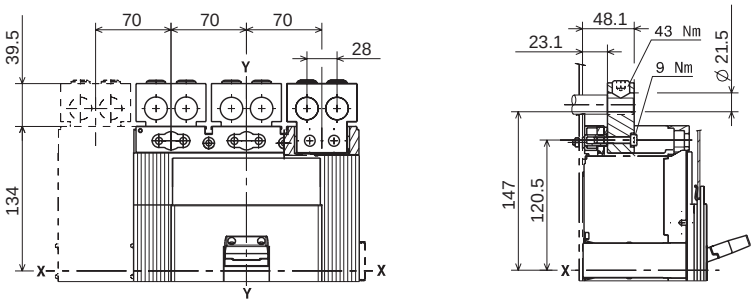

630 A

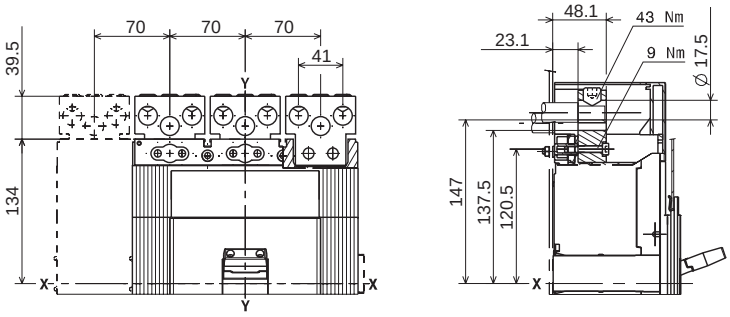

800 A

Rear horizontal - R

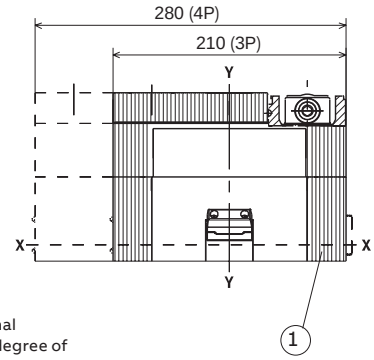

1 Low terminal covers with degree of protection IP40

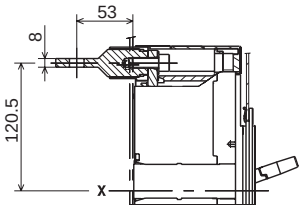

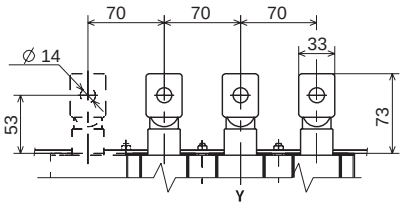

3-4 POLES

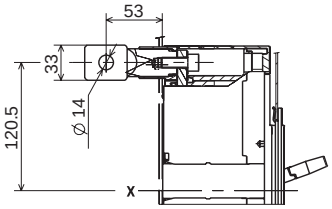

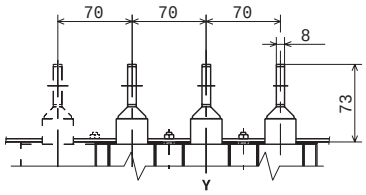

3-4 POLES

Dimensions of other frames - Tmax T4

Plug-in circuit-breaker

1 Fixed part
2 Moving part with terminal covers, degree of protection IP40
3 Overall dimensions with cabled accessories mounted (SOR-C, UVR-C, RC222-223)
4 Overall dimensions with cabled auxiliary contacts mounted (only 3Q 1SY)

Fixing on sheet

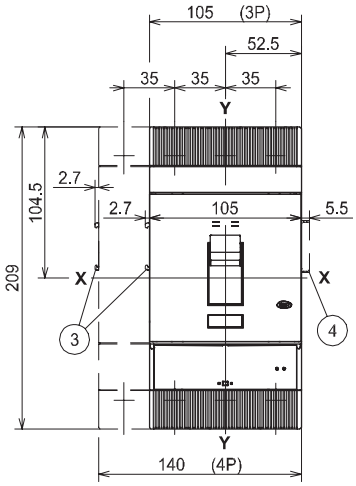

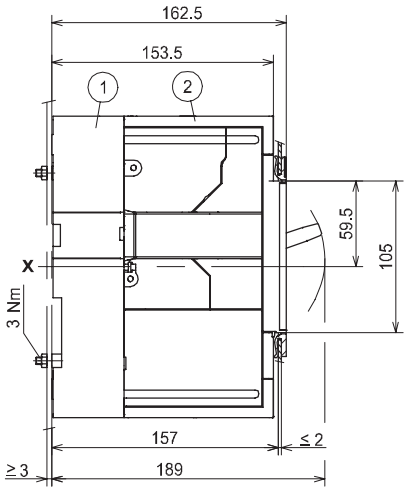

Flange for compartment door

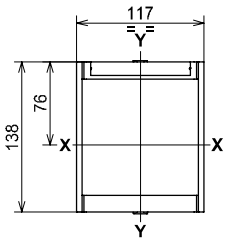

Drilling templates of the compartment door

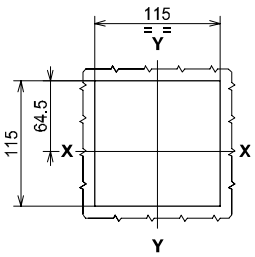

With flange

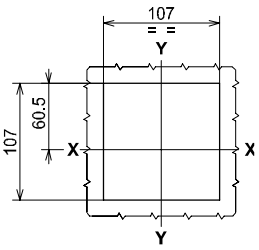

Without flange

Drilling templates for support sheet

For front terminals

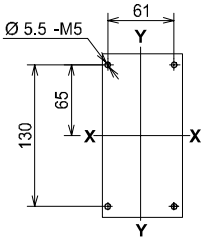

3 POLES

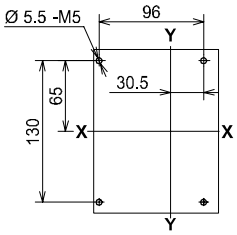

4 POLES

For rear terminals

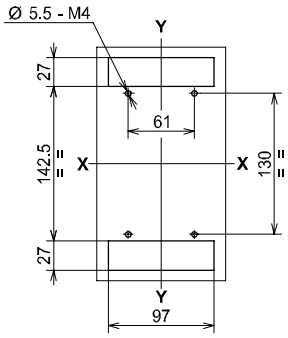

3 POLES

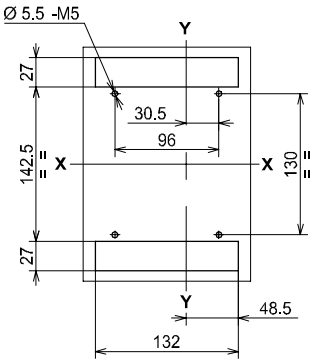

4 POLES

Dimensions of other frames - Tmax T4

Terminals

Front extended - EF

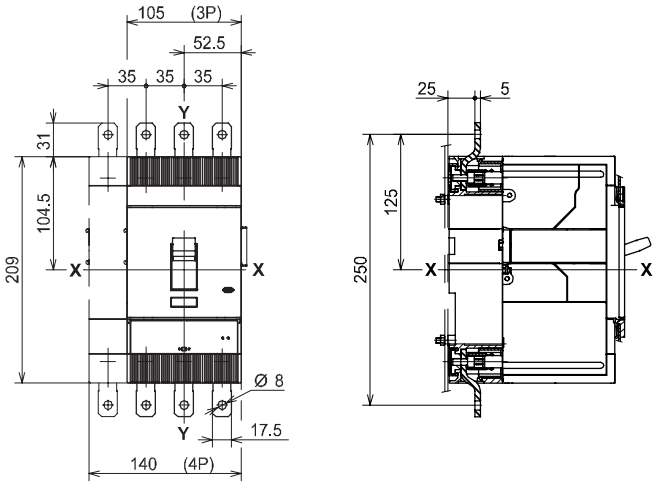

Front for copper cables - FC Cu or for copper/aluminium cables - FC CuAl

1 For Cu cables
2 For Cu Al cables
3 High terminal covers with degree of protection IP40

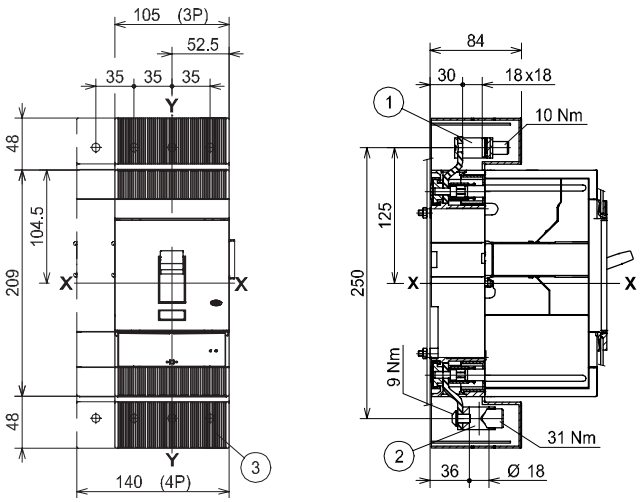

—
Key
1 For Cu cables
2 For Cu Al cables
3 High terminal covers with degree of protection IP40

Dimensions of other frames - Tmax T4

Terminals

Rear flat vertical - VR

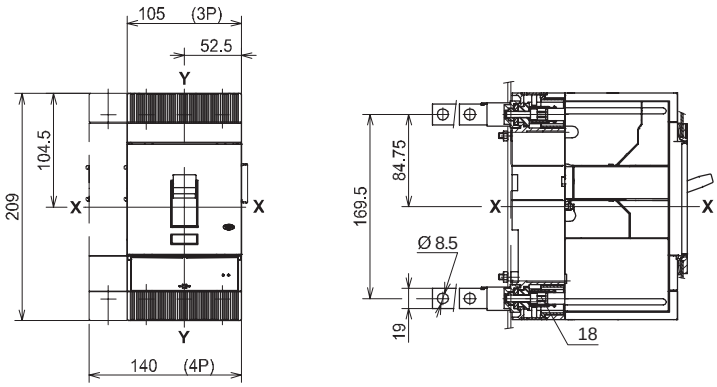

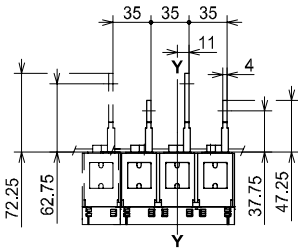

3-4 POLES

Rear flat horizontal - HR

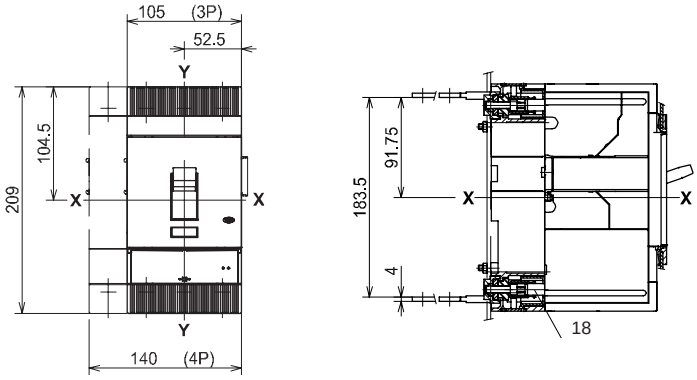

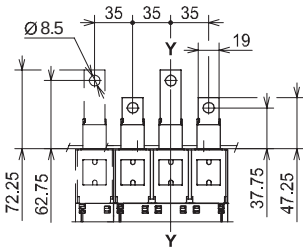

3-4 POLES

Dimensions of other frames - Tmax T5

Plug-in circuit-breaker

Fixing on sheet

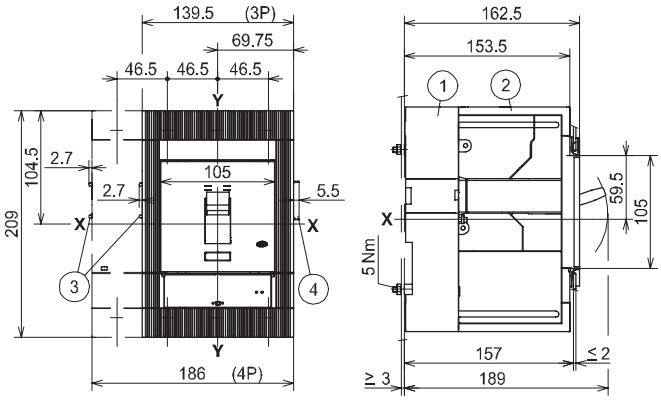

400 A

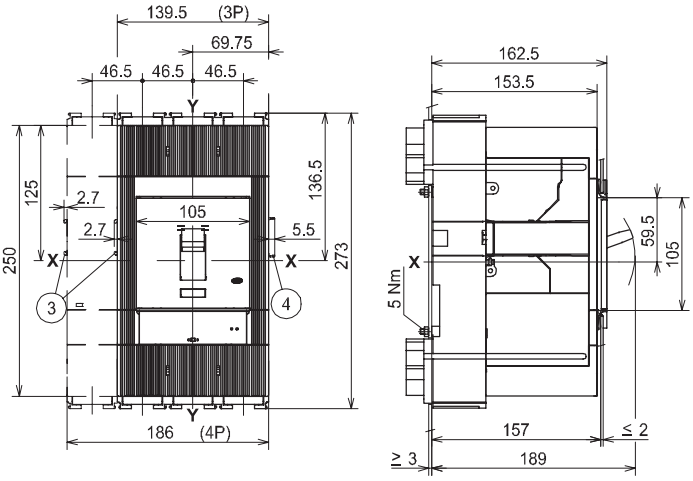

630 A

1 Fixed part
2 Moving part with terminal covers, degree of protection IP40
3 Overall dimensions with cabled accessories mounted (SOR-C, UVR-C, RC221-222)
4 Overall dimensions with cabled auxiliary contacts mounted (only 3Q 1SY)

Flange for compartment door

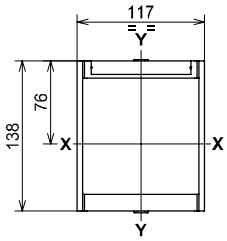

Drilling templates of the compartment door

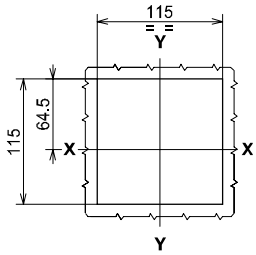

With flange

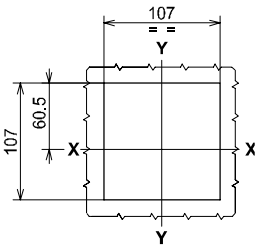

Without flange

Drilling templates for support sheet

For front terminals 400 A

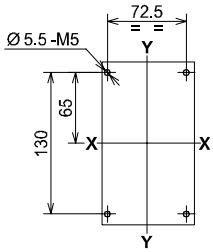

3 POLES

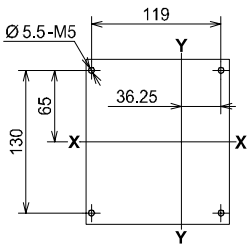

4 POLES

For front terminals 630 A
For rear terminals 400 A - 630 A

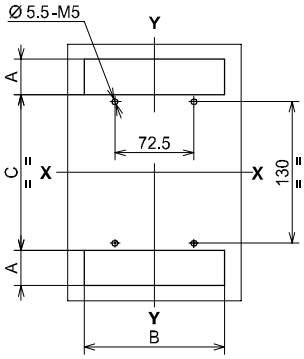

3 POLES

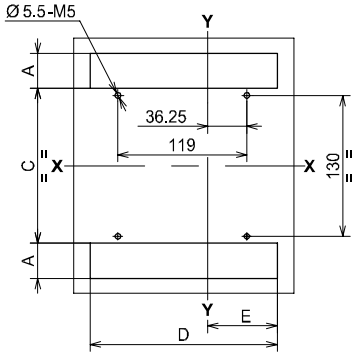

4 POLES

	A	B	C	D	E
Rear 400 A	32.5	128.5	143	172.5	64.5
Front and rear 630 A	61.8	139	142	185.5	69.5

Dimensions of other frames - Tmax T5

Terminals

Front extended 400 A - EF

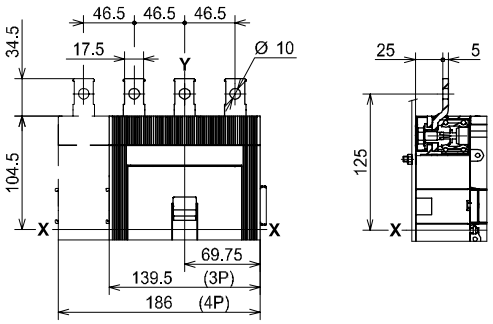

Front extended 630 A - F

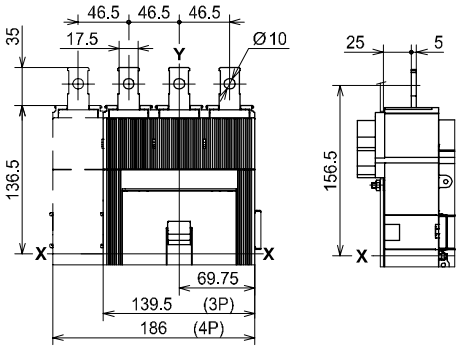

Front for copper cables - FC Cu or for copper/aluminium cables - FC CuAl

1 Fixed part
2 Moving part with terminal covers, degree of protection IP40
3 Overall dimensions with cabled accessories mounted (SOR-C, UVR-C, RC221-222)
4 Overall dimensions with cabled auxiliary contacts mounted (only 3Q 1SY)

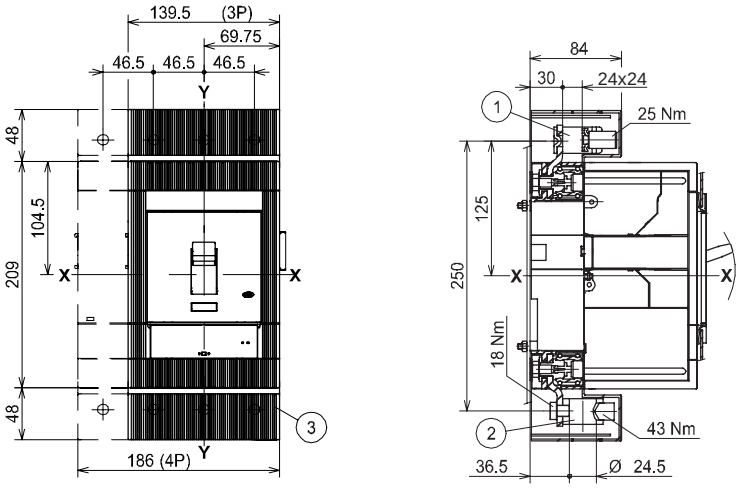

Front extended spread 630 A - ES

1 Insulating barriers between phases (compulsory)

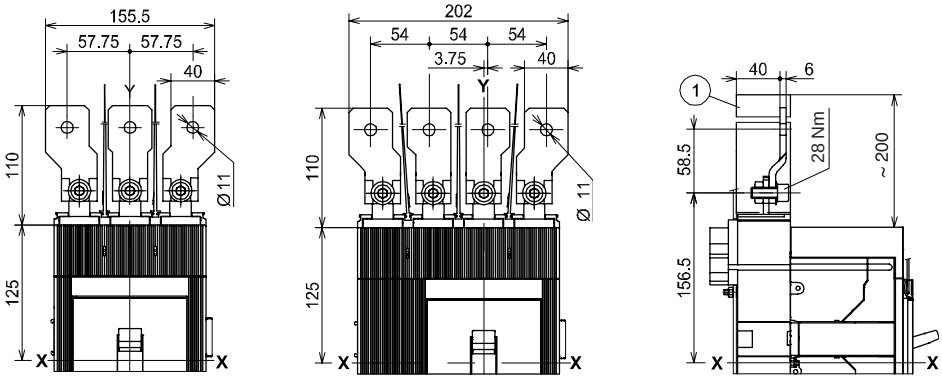

Rear flat horizontal 400 A - HR

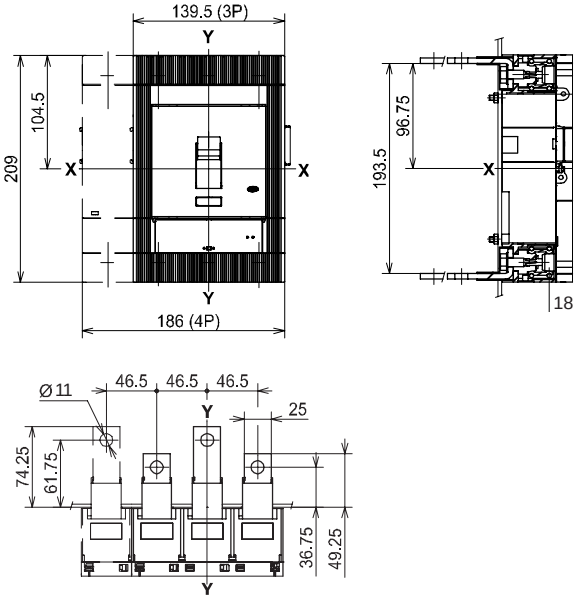

Rear flat vertical 400 A - VR

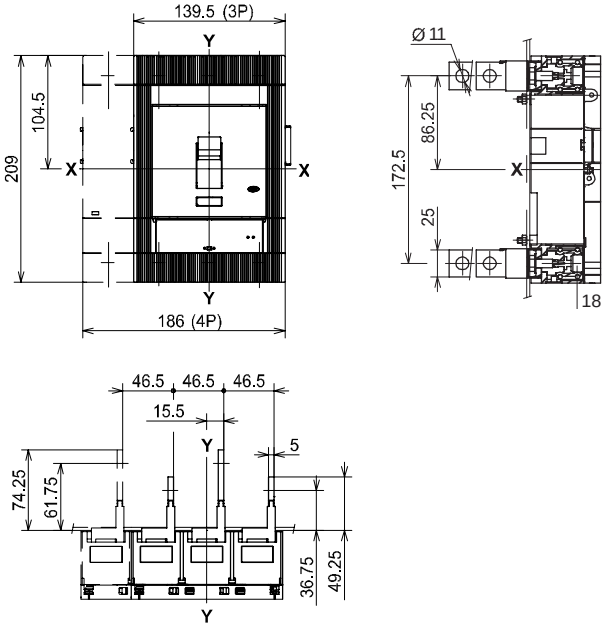

Rear flat horizontal 630 A - HR

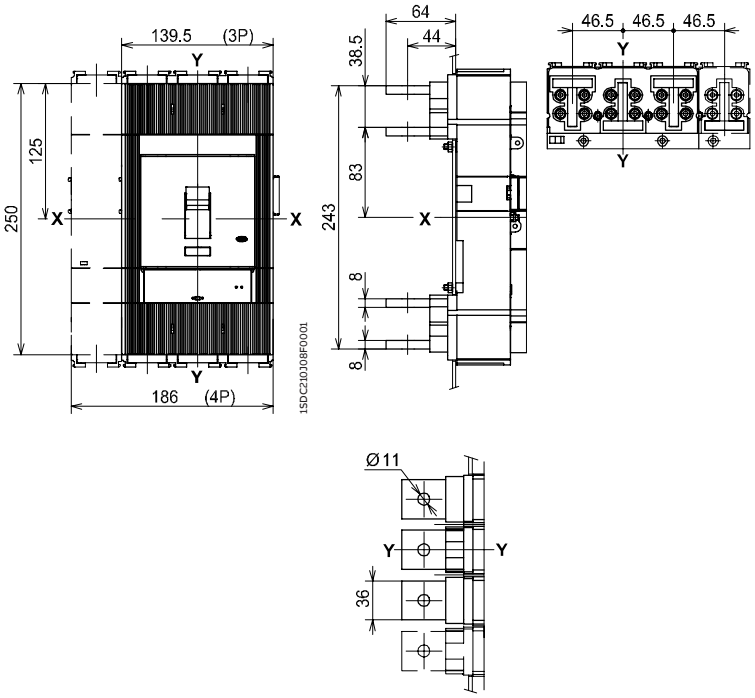

Rear flat vertical 630 A - VR

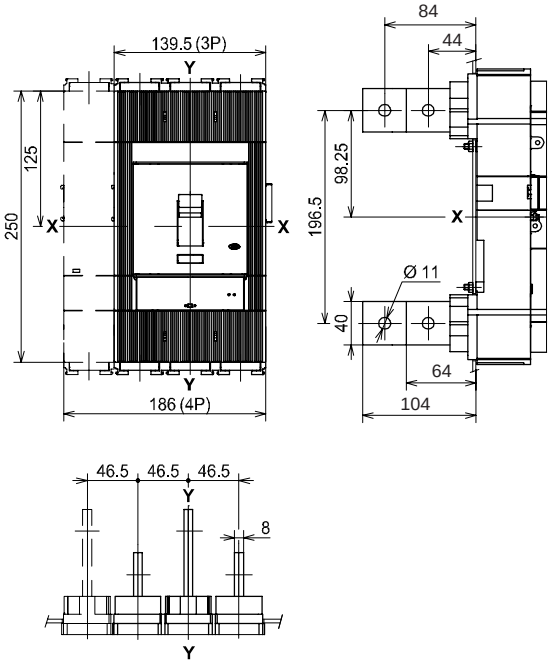

Dimensions of other frames - Tmax T4

Withdrawable circuit-breaker

1 Fixed part
2 Moving part
3 Lock for compartment door (available on request)
4 Overall dimensions with cabled accessories mounted (SOR-C, UVR-C, RC222-223)

Fixing on sheet

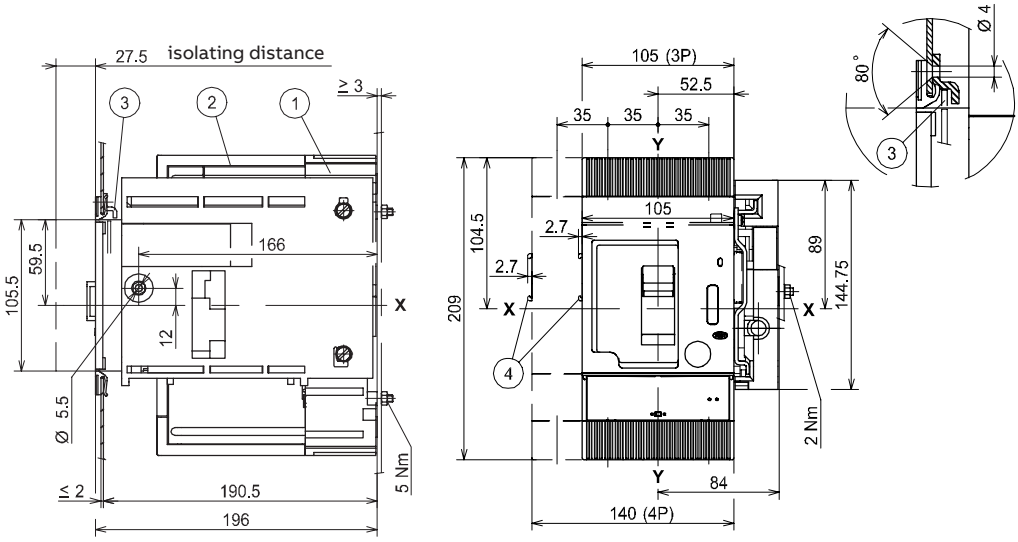

Flange for compartment door

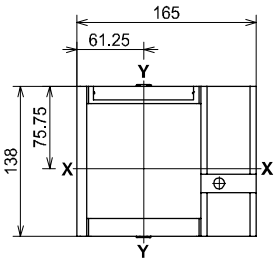

Drilling templates of the compartment door

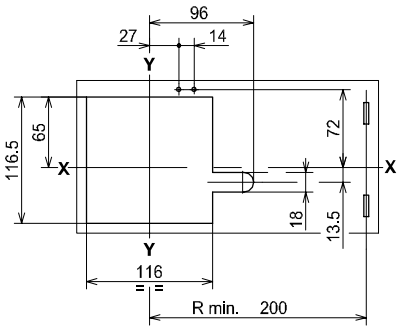

Drilling templates for support sheet

For front terminals

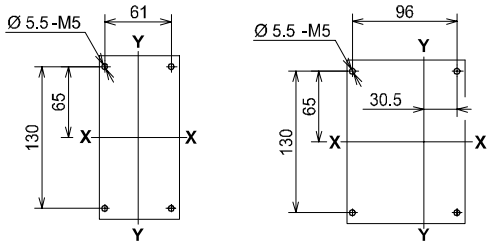

3 POLES 4 POLES

For rear terminals

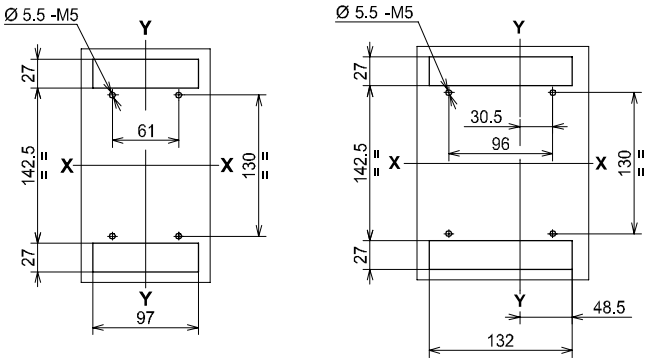

3 POLES 4 POLES

Dimensions of other frames - Tmax T4

Terminals

Front - EF

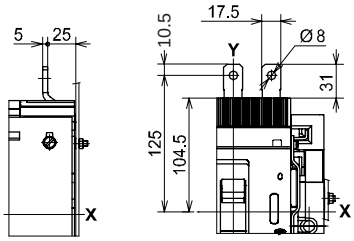

Front for copper cables - FC Cu

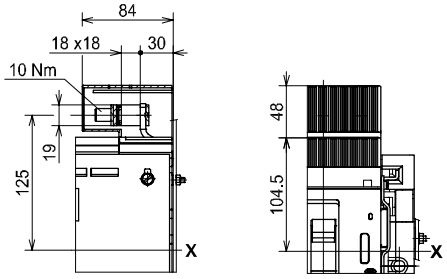

Front for copper/aluminium cables - FC CuAl

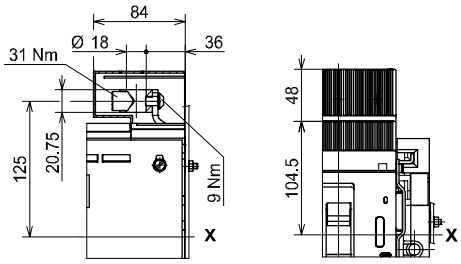

Rear flat horizontal - HR

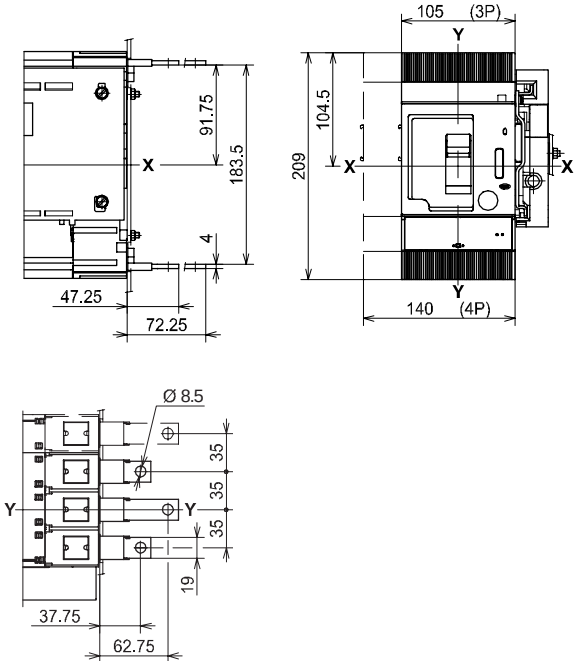

3-4 POLES

Rear flat vertical - VR

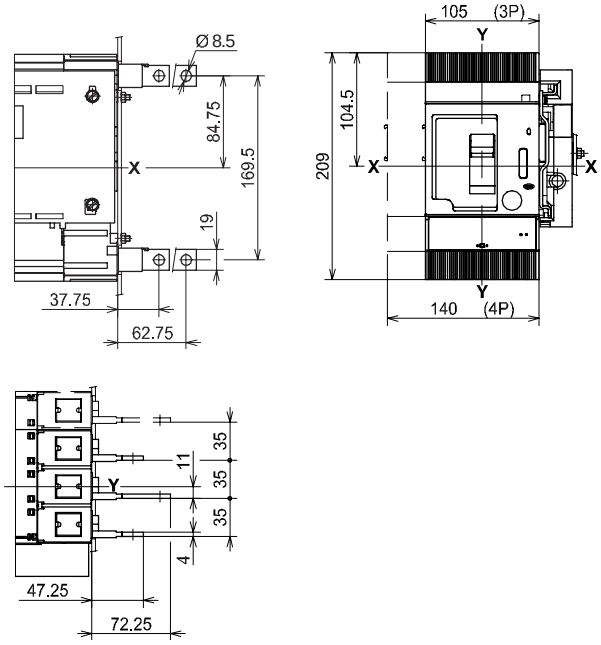

3-4 POLES

Dimensions of other frames - Tmax T5

Withdrawable circuit-breaker

Fixing on sheet

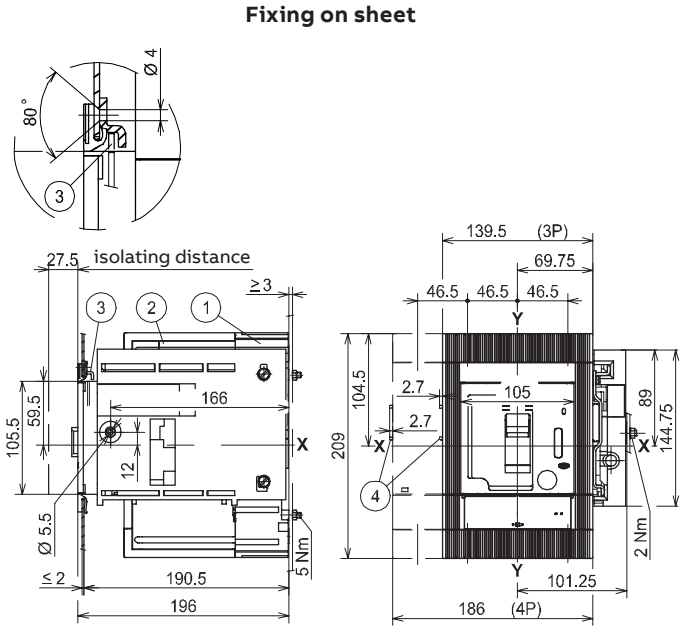

400 A

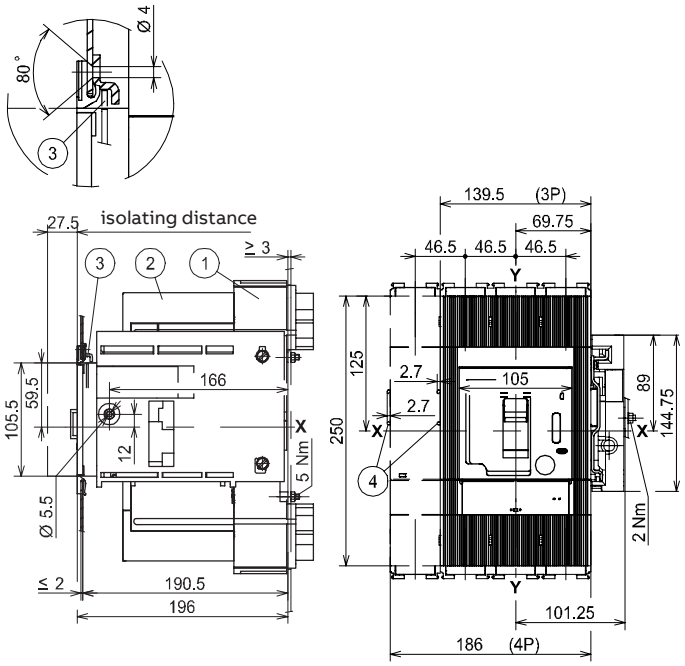

630 A

Flange for compartment door

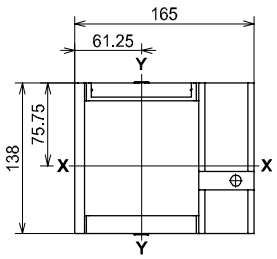

Drilling templates of the compartment door

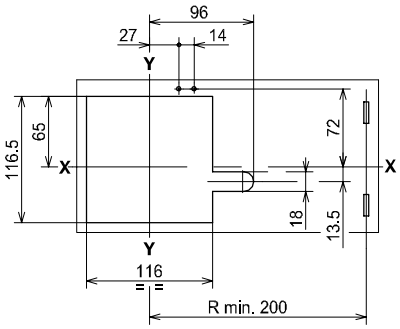

Drilling templates for support sheet

For front terminals 400 A

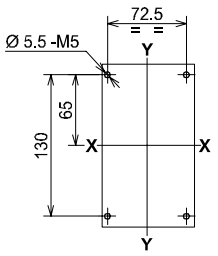

3 POLES

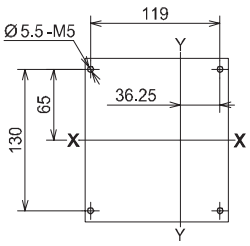

4 POLES

	A	B	C	D	E
Rear 400 A	32.5	128.5	143	172.5	64.5
Front and rear 630 A	61.8	139	142	185.5	69.5

For front terminals 630 A
For rear terminals 400 A - 630 A

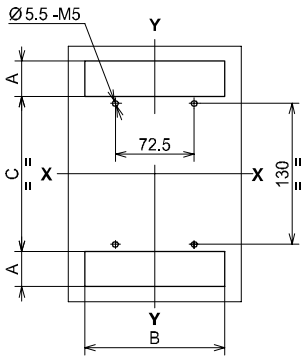

3 POLES

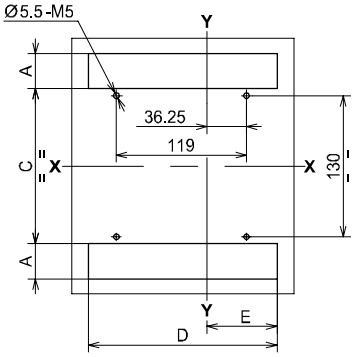

4 POLES

Dimensions of other frames - Tmax T5

Terminals

Front extended 400 A - EF

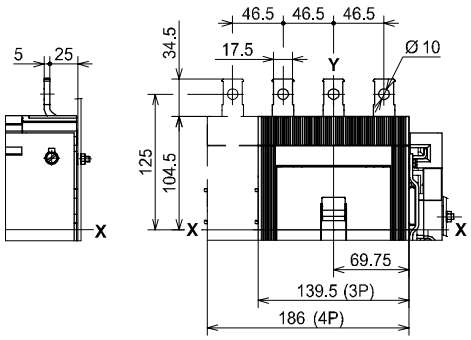

Front extended 630 A - EF

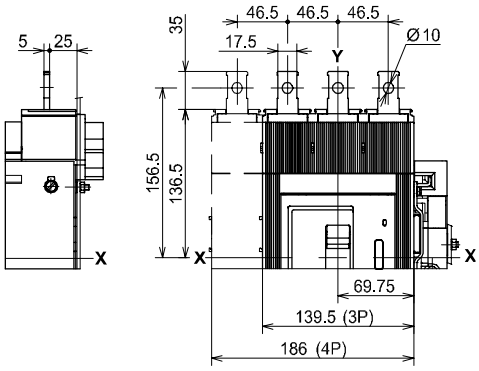

Front for copper cables - FC Cu or for copper/aluminium cables - FC CuAl 400 A

1 Front terminals for copper cables
2 Front terminals for copper/aluminium cables
3 Terminals with degree of protection IP40

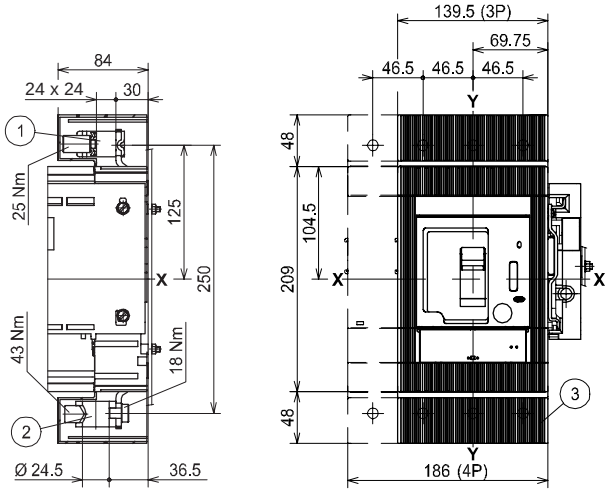

Front extended spread 630 A - ES

1 Insulating barriers between phases (compulsory)

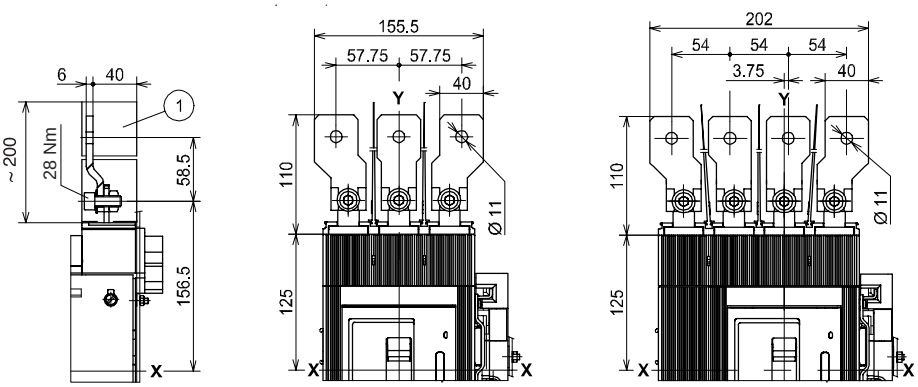

Dimensions of other frames - Tmax T5

Terminals

Rear flat horizontal 400 A - HR

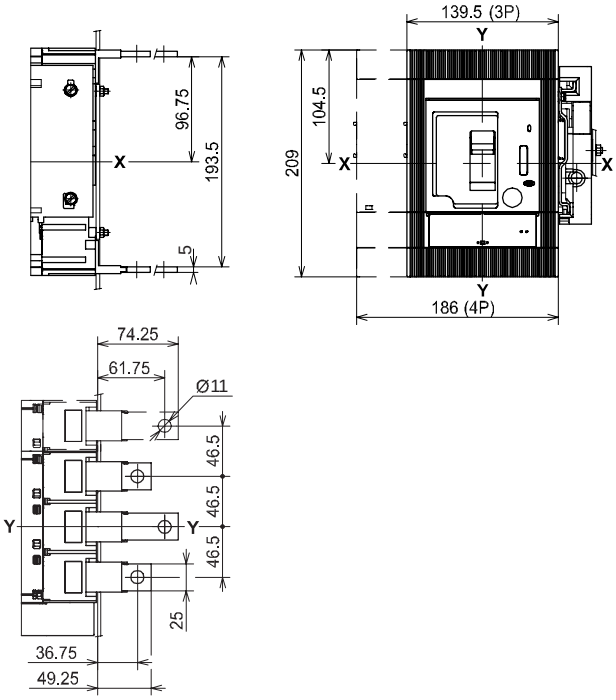

Rear flat vertical 400 A - VR

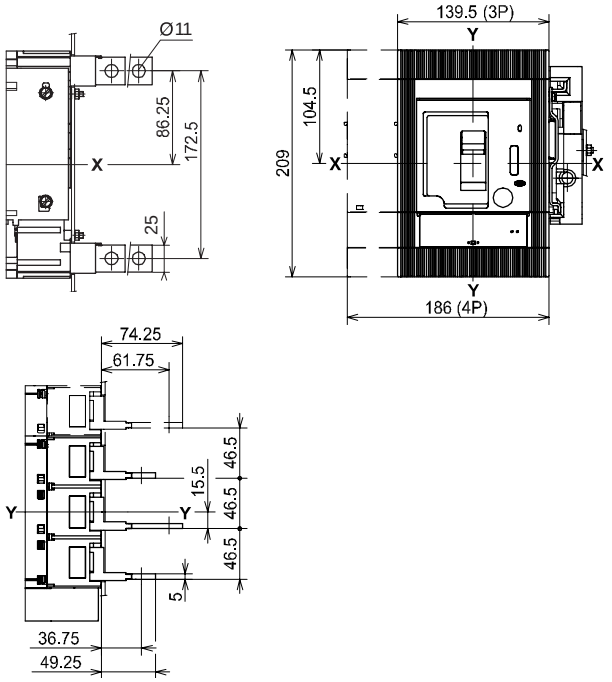

Rear flat horizontal 630 A - HR

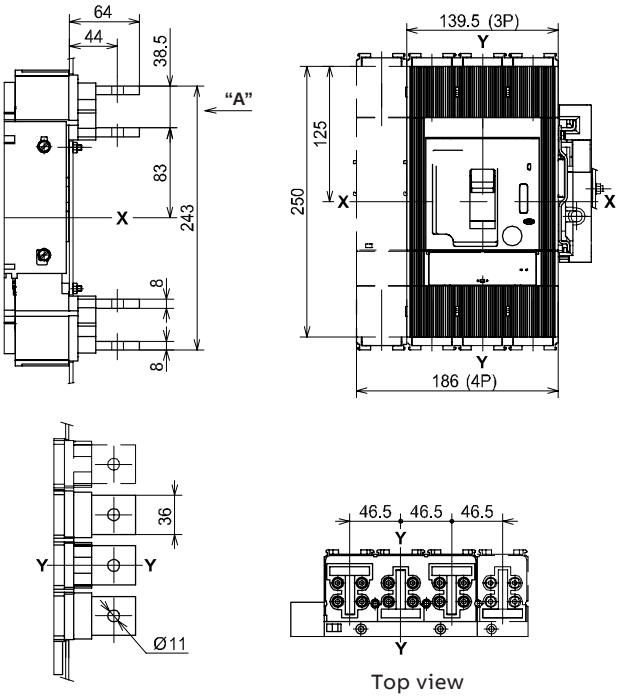

Rear flat vertical 630 A - VR

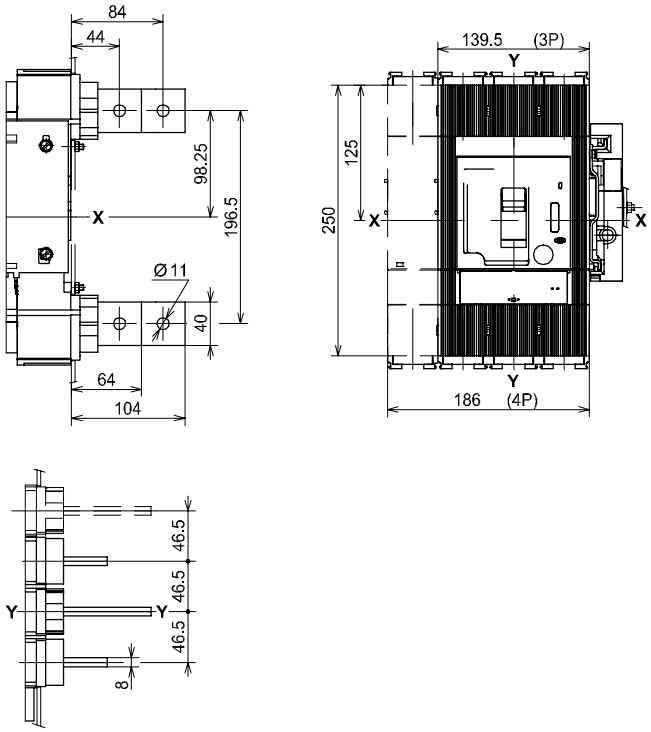

Dimensions of other frames - Tmax T6 630 A - T6 800 A

Withdrawable circuit-breaker

1 Front terminals for copper cables
2 Front terminals for copper/aluminium cables
3 Terminals with degree of protection IP40

Fixing on sheet

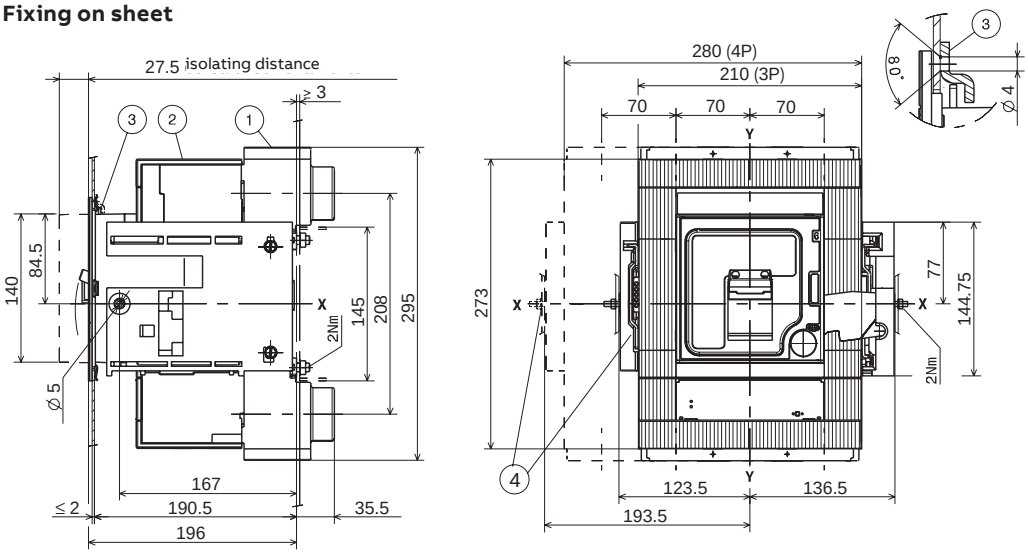

Flange for compartment door

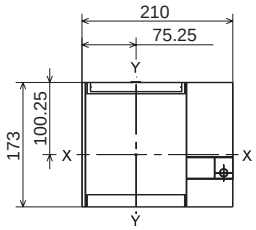

Drilling templates of the compartment door

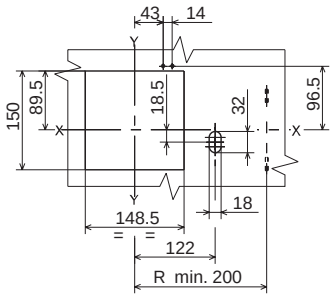

Drilling templates for support sheet

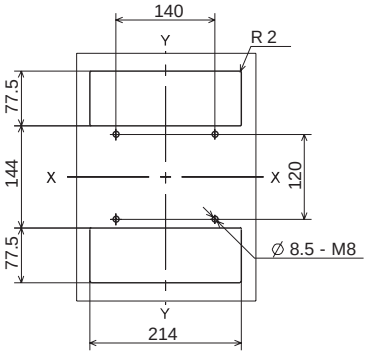

3 POLES

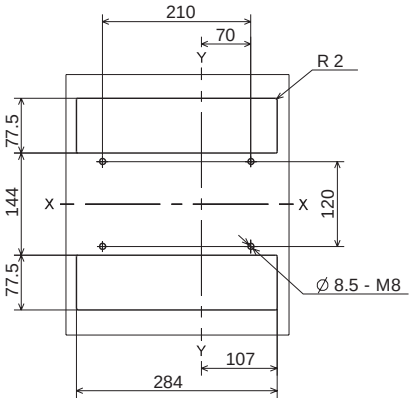

4 POLES

Dimensions of other frames - Tmax T6 630 A - T6 800 A

Terminals

Front extended - EF

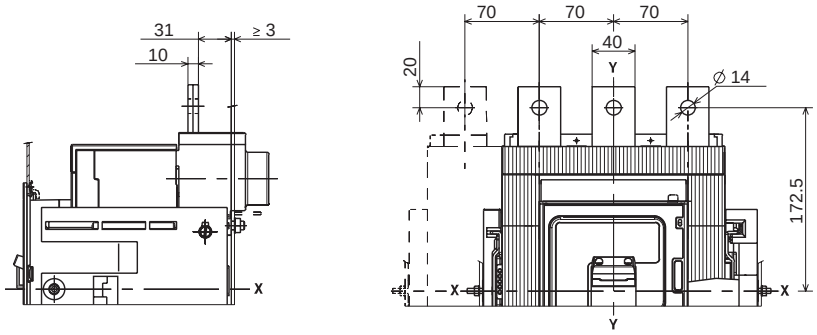

Rear flat horizontal - HR

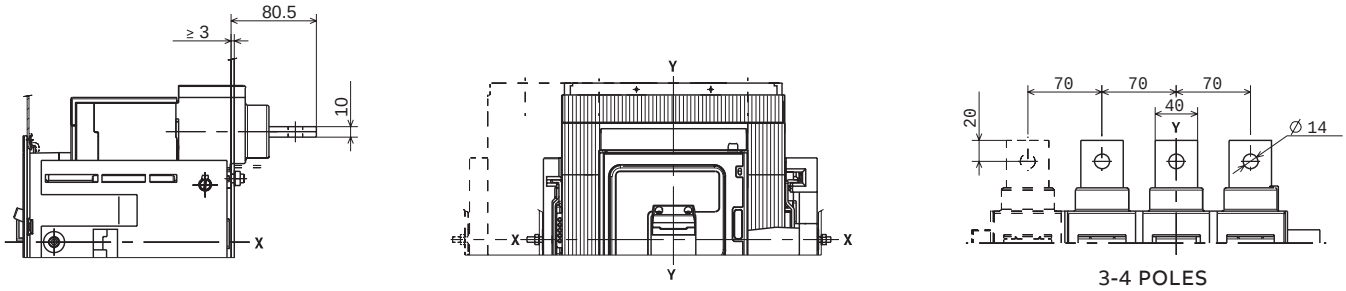

Rear flat vertical - VR

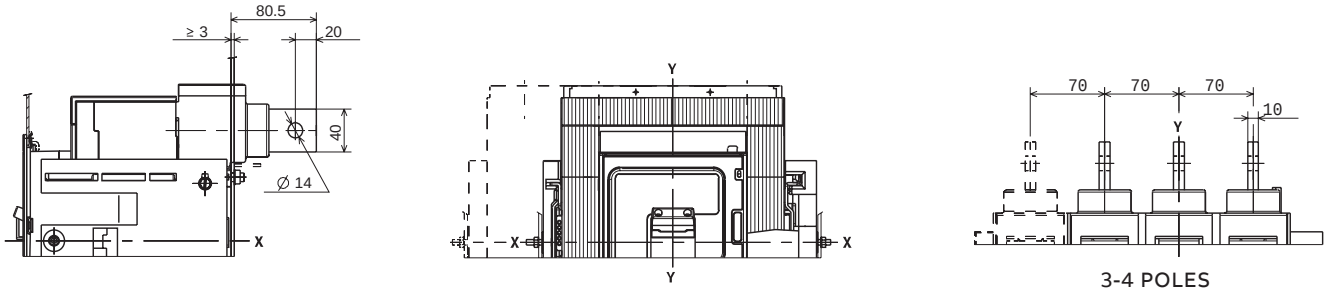

Dimensions of other frames - Tmax T4 - T5

Accessories - Fixed version

Rotary handle operating mechanism on the compartment door

1 Transmission unit
2 Rotary handle assembly with door lock device
3 Padlock device for open position (maximum 3 padlocks to be provided by the user)
4 IP54 protection (supplied on request)
5 Min...max distance from the front of the door without accessory 4
6 Min...max distance from the front of the door with accessory 4
7 Dimension with AUE connector (early making contact)

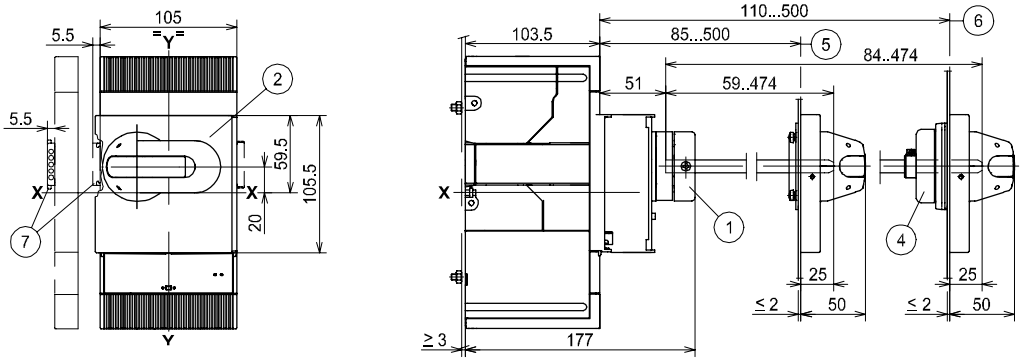

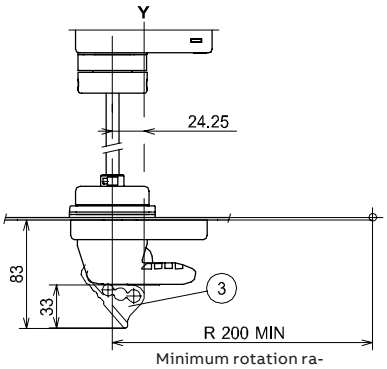

Minimum rotation radius for door fulcrum

Drilling of compartment door

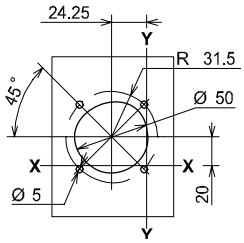

Rotary handle operating mechanism on circuit-breaker

1 Rotary handle operating mechanism on circuit-breaker
2 Padlock device for open position (maximum 3 padlocks to be provided by the user)
3 Dimension with AUE connector (early making contact)
4 Compartment door lock

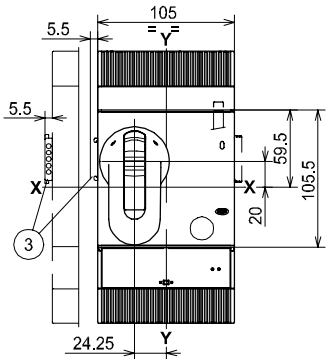

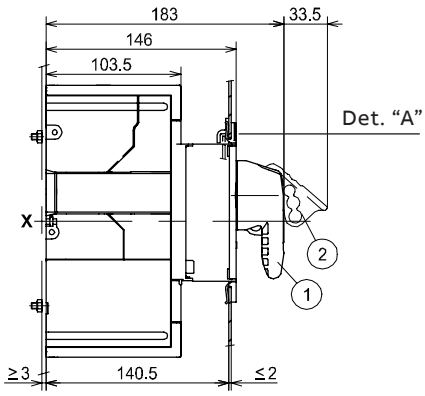

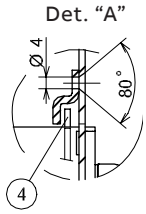

Drilling template of the compartment door

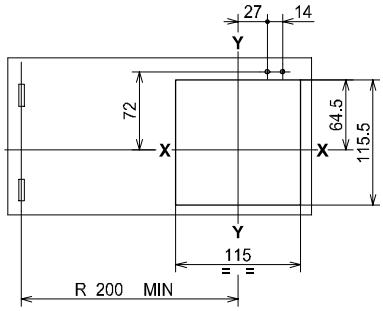

With flange

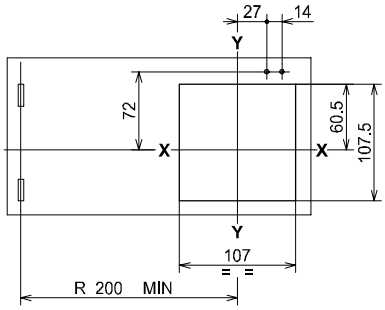

Without flange

Flange for the compartment door

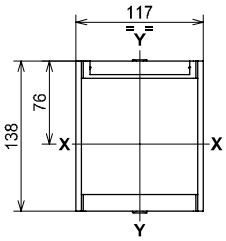

Dimensions of other frames - Tmax T4 - T5

Accessories - Fixed version

1 Overall dimensions with cabled auxiliary contacts mounted (only 3Q 1SY)

Motor operator

T4

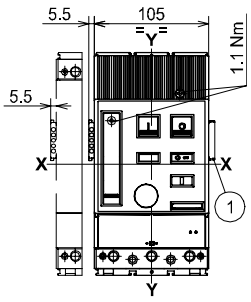

T5

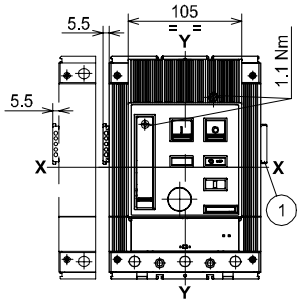

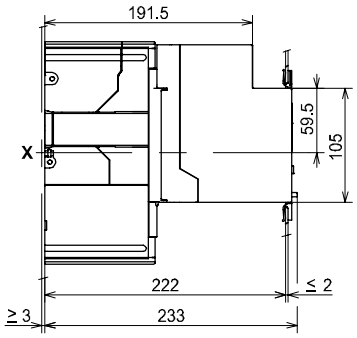

Flange for the compartment door (supplied as standard)

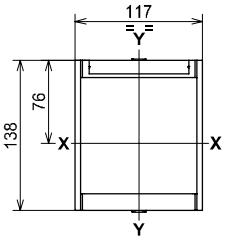

Drilling template of the compartment door

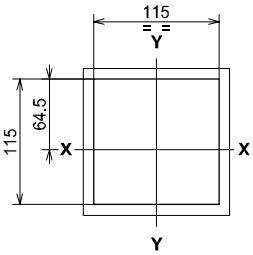

With flange

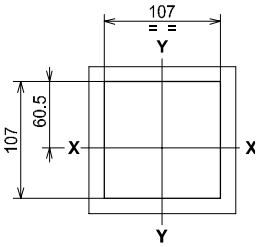

Without flange

Drilling template for support sheet

T4

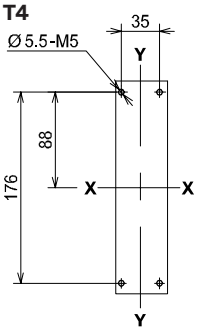

3 POLES

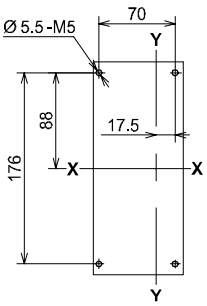

4 POLES

T5

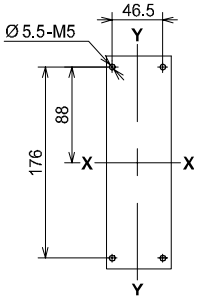

3 POLES

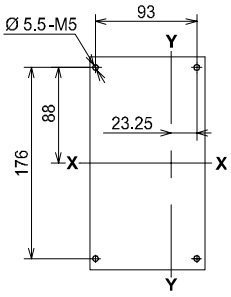

4 POLES

1 Front for lever operating mechanism
2 Lock for the compartment door (supplied on request)

Front for lever operating mechanism

T4

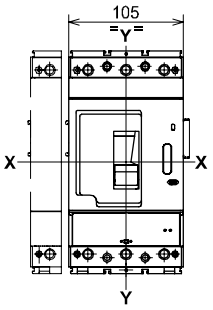

T5

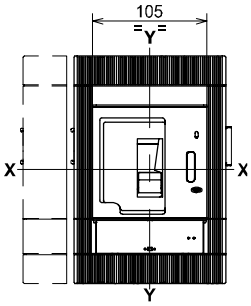

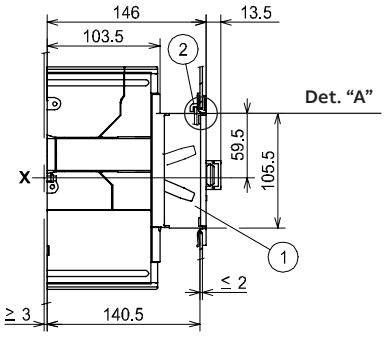

Flange for the compartment door (supplied as standard)

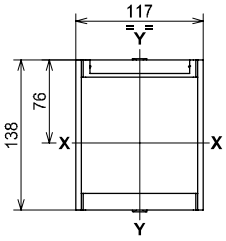

Drilling template for the compartment door

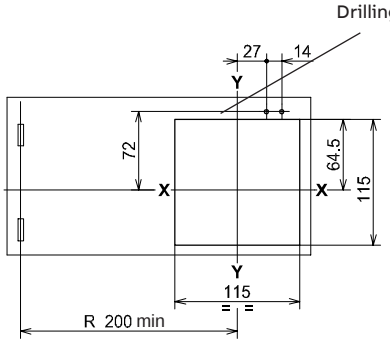

With flange

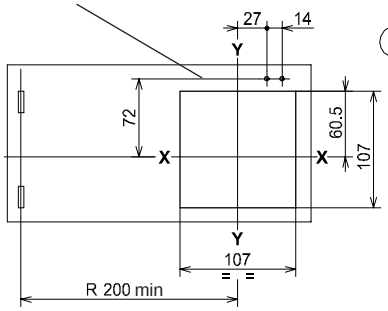

Without flange

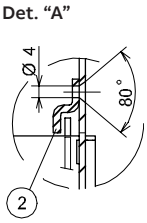

Drilling template for support sheet

	A	B	C
T4	35	70	17.5
T5	46.5	93	23.25

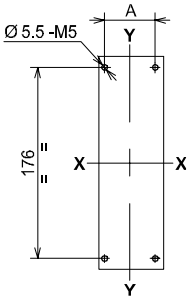

3 POLES

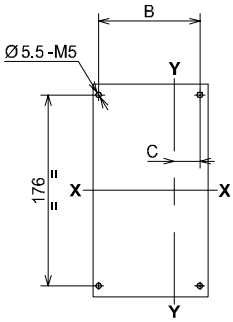

4 POLES

Dimensions of other frames - Tmax T4 - T5

Accessories - Fixed version

Interlock between two circuit-breakers placed side by side

1 Interlocking mechanism
2 Circuit-breaker coupling plate

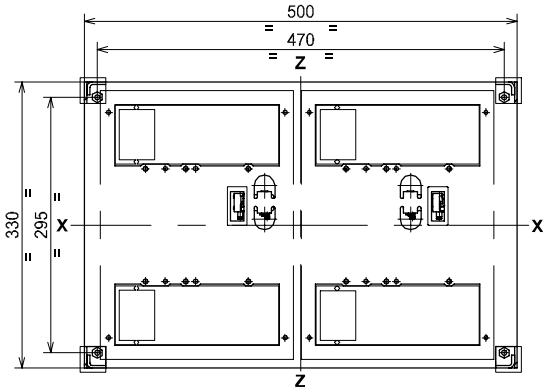

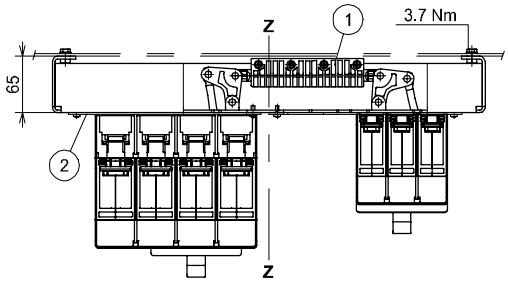

Drilling templates for fixing the circuit-breaker on the support sheet

1 Drilling template for all versions with rear terminals

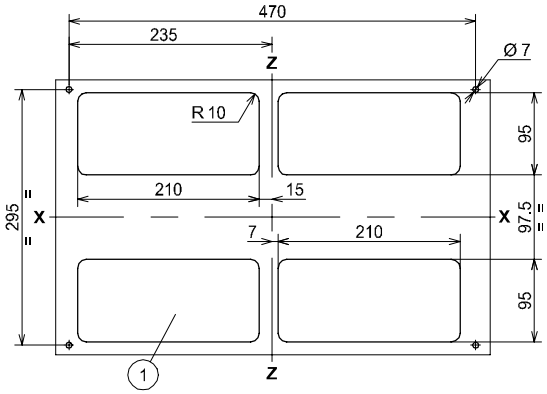

Interlock between two circuit-breakers placed side by side

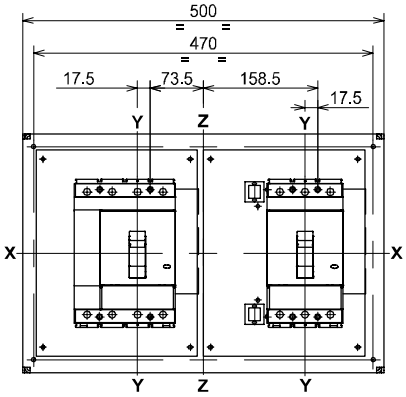

A

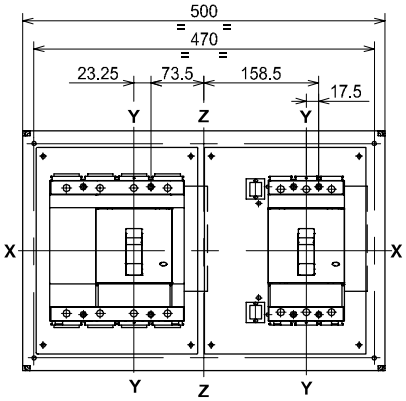

B

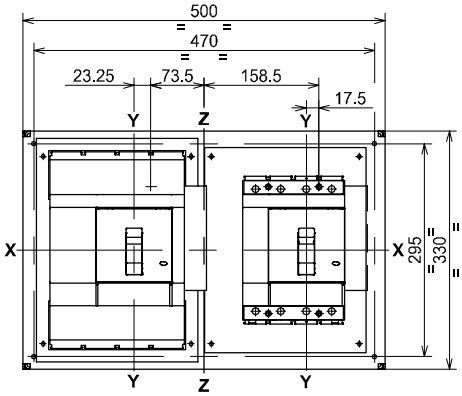

C

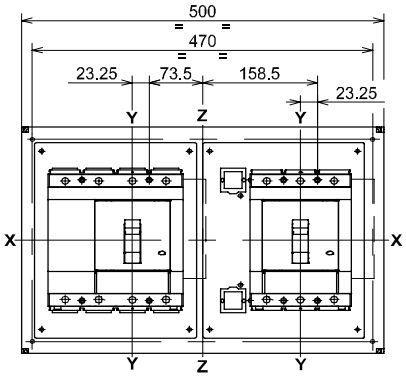

D

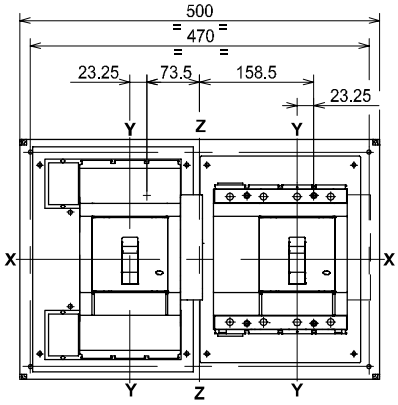

E

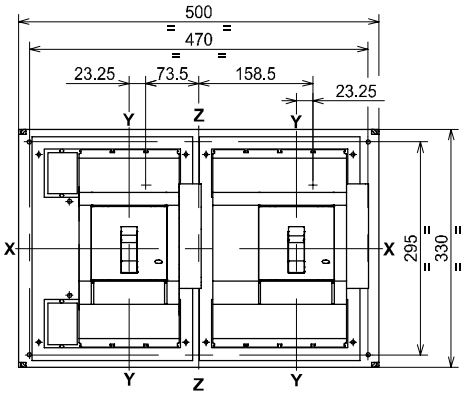

F

Type	Circuit-breakers
A	N° 1 T4 (F-P-W)
	N° 1 T4 (F-P-W)
B	N° 1 T4 (F-P-W)
	N° 1 T5 400 (F-P-W) or T5 630 (F)
C	N° 1 T4 (F-P-W)
	N° 1 T5 630 (P-W)
D	N° 1 T5 400 (F-P-W) or T5 630 (F)
	N° 1 T5 400 (F-P-W) or T5 630 (F)
E	N° 1 T5 400 (F-P-W) or T5 630 (F)
	N° 1 T5 630 (P-W)
F	N° 1 T5 630 (P-W)
	N° 1 T5 630 (P-W)

(F) Fixed circuit-breaker
(P) Plug-in circuit-breaker
(W) Withdrawable circuit-breaker

Dimensions of other frames - Tmax T4 - T5

Accessories - Withdrawable version

Motor operator

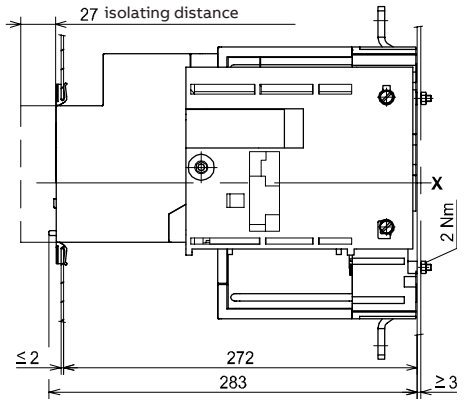

T4

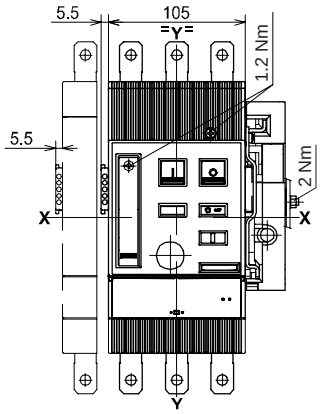

T5 (400 A)

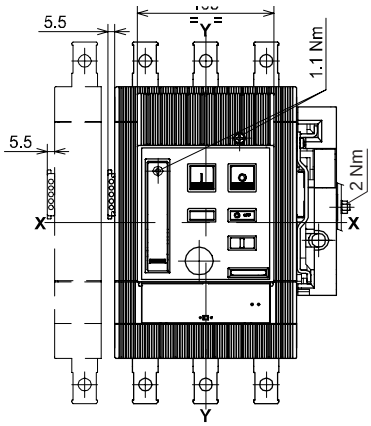

T5 (630 A)

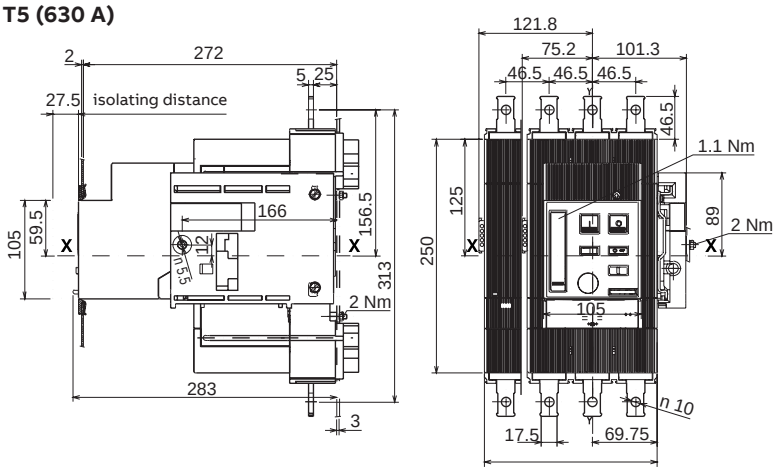

Flange for the compartment door (supplied as standard)

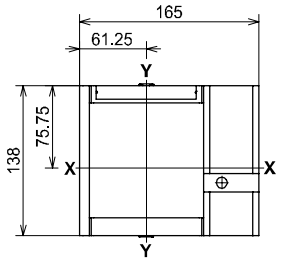

Drilling templates for the compartment door and fitting flange

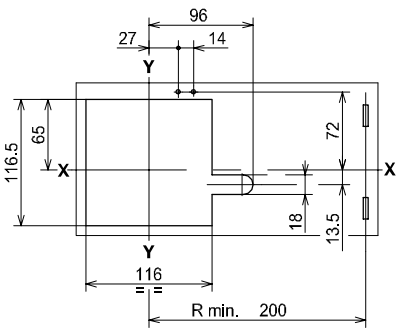

Rotary handle operating mechanism on the circuit-breakers

1 Padlock device for open position (maximum 3 padlocks to be provided by the user)
2 Lock for compartment door
3 Dimension with AUE connector (early making contact)

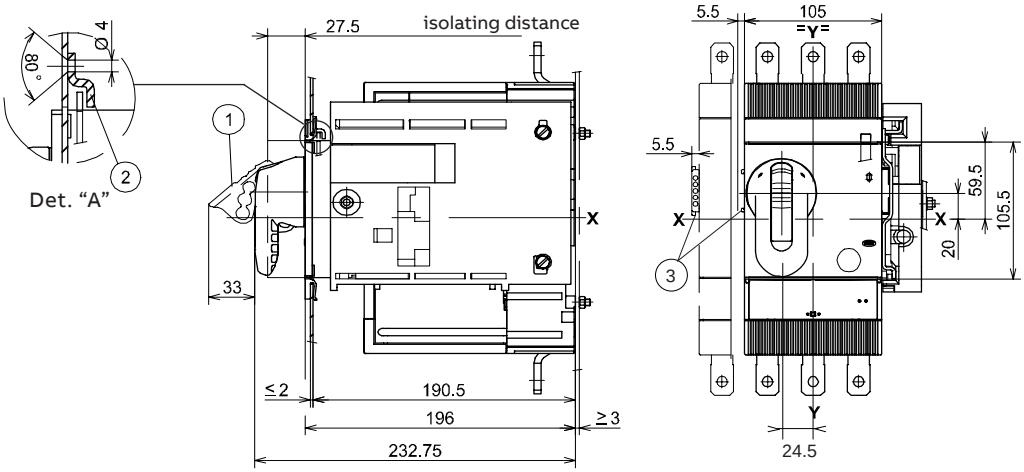

Flange for the compartment door

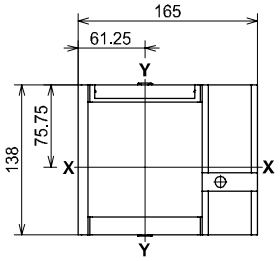

Drilling template for compartment door and fitting flange

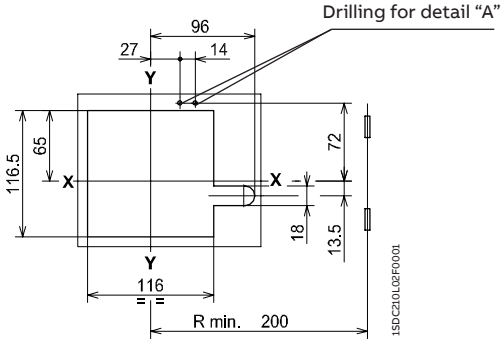

Dimensions of other frames - Tmax T4 - T5

Accessories - Withdrawable version

1 IP44 protection
2 Compartment door sheet steel drilling
3 Spacing when equipped with SOR-C, UVR-C, RC221-222

Protection kit IP44 for T4 fixed

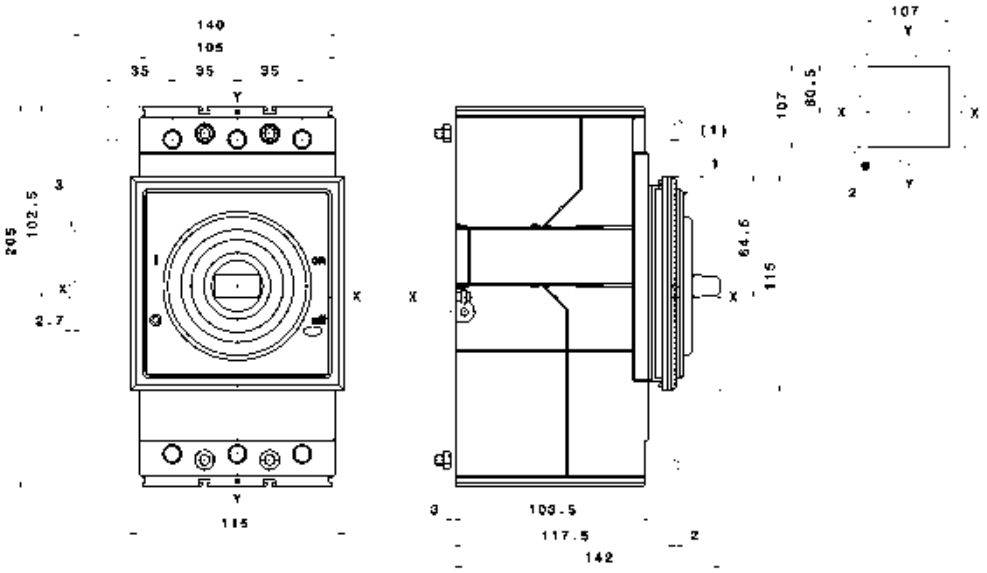

1 IP44 protection
2 Compartment door sheet steel drilling
3 Spacing when equipped with SOR-C, UVR-C, RC221-222
4 Spacing when equipped with AUX-C (3Q 1SY only)

Protection kit IP44 for T5 fixed

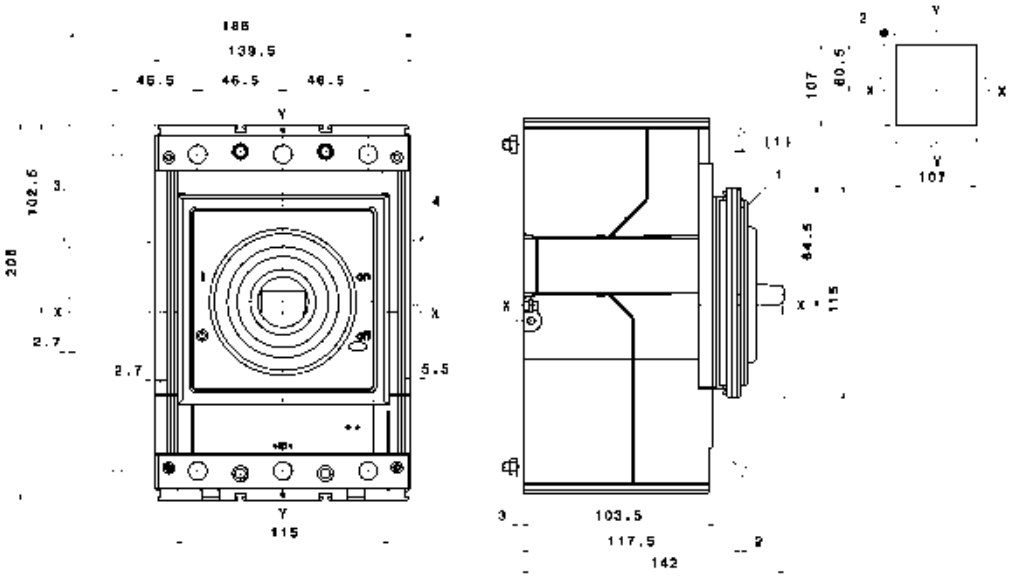

Dimensions of other frames - Tmax T6

Accessories - Fixed version

Rotary handle operating mechanism on the compartment door

1 Transmission unit
2 Rotary handle assembly with door lock device
3 Padlock device for open position (maximum 3 padlocks to be provided by the user)
4 IP54 protection (supplied on request)
5 Min...max distance from the front of the door without accessory 4
6 Min...max distance from the front of the door with accessory 4
7 Dimension with AUE connector (early making contact)

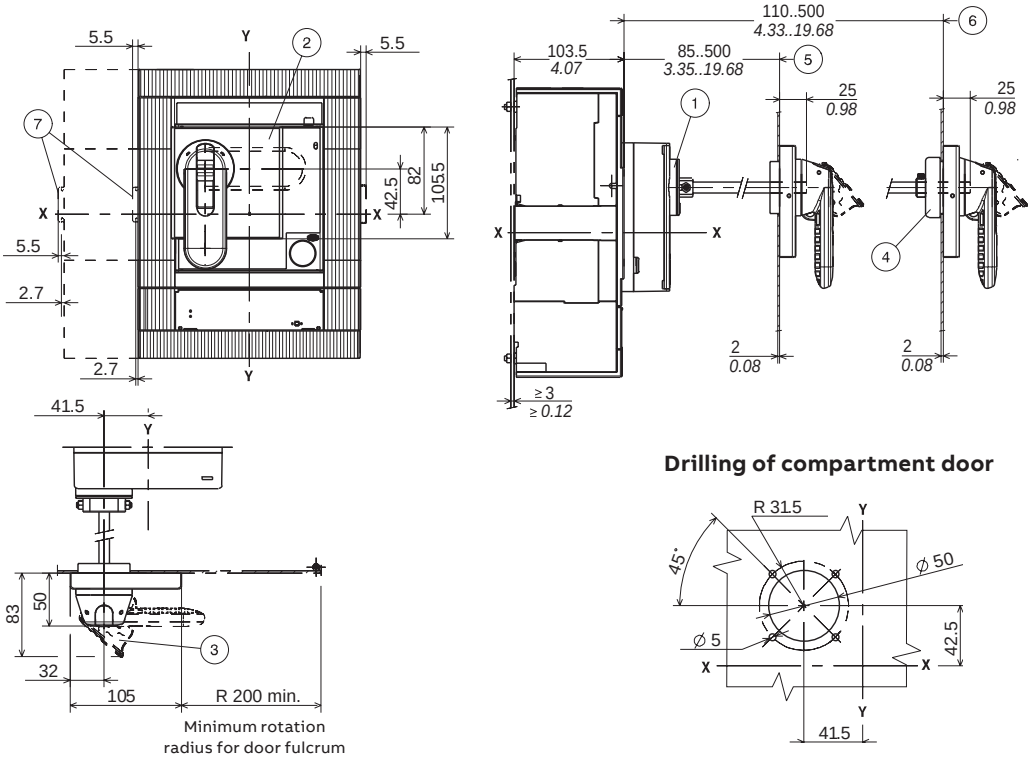

Drilling of compartment door

Rotary handle operating mechanism on circuit-breaker

1 Rotary handle operating mechanism on circuit-breaker
2 Padlock device for open position (maximum 3 padlocks to be provided by the user)
3 Dimension with AUE connector (early making contact)
4 Compartment door lock

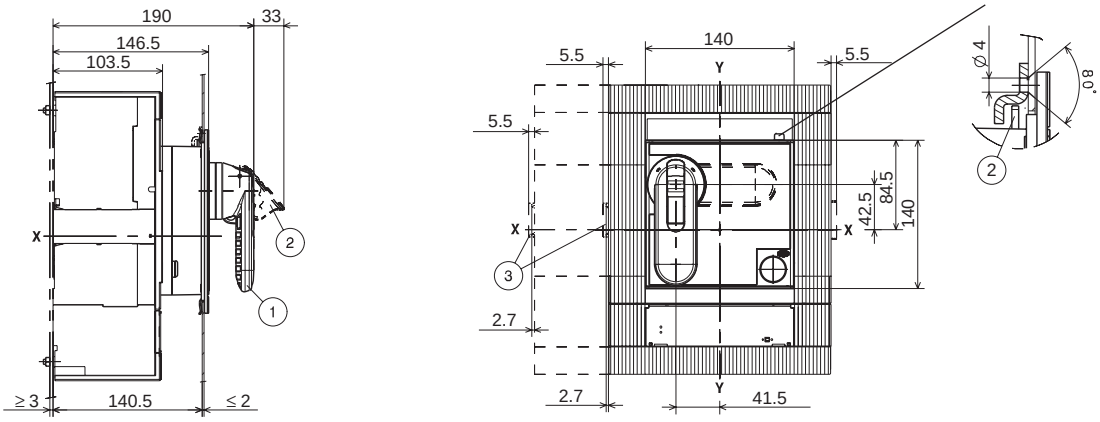

Drilling template of the compartment door

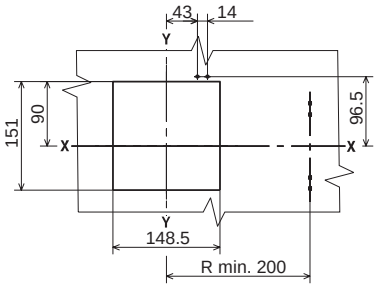

With flange

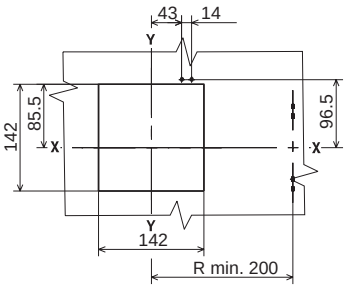

Without flange

Flange for the compartment door

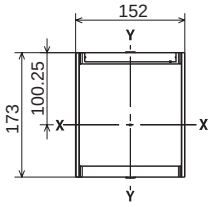

Dimensions of other frames - Tmax T6

Accessories - Fixed version

Motor operator

1 Overall dimensions with cabled auxiliary contacts mounted (only 3Q 1SY)

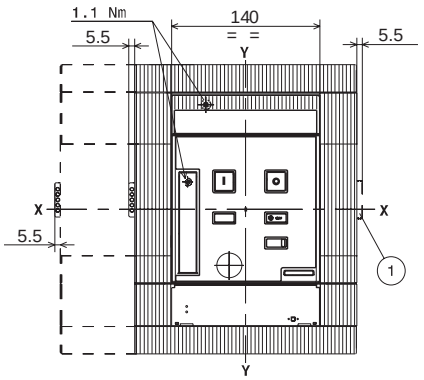

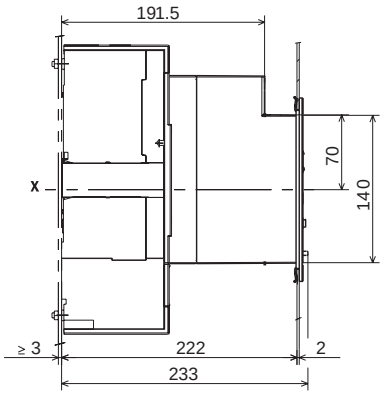

Flange for the compartment door (supplied as standard)

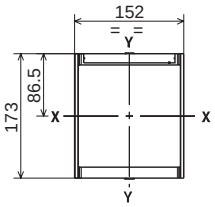

With flange

Drilling template of the compartment door

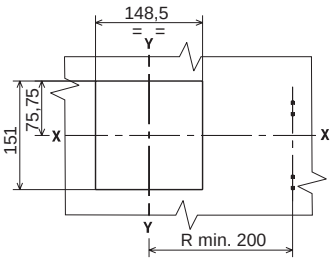

Without flange

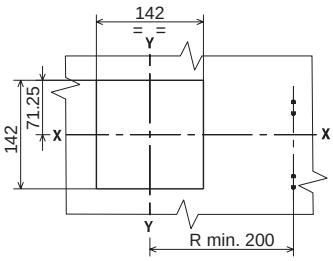

Drilling template for support sheet

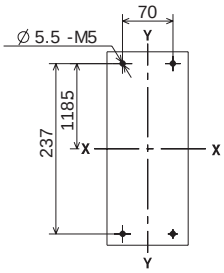

3 POLES

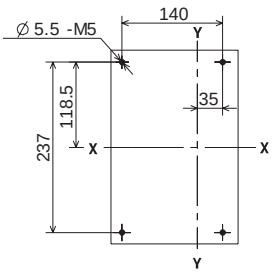

4 POLES

1 Front for lever operating mechanism
2 Lock for the compartment door

Front for lever operating mechanism

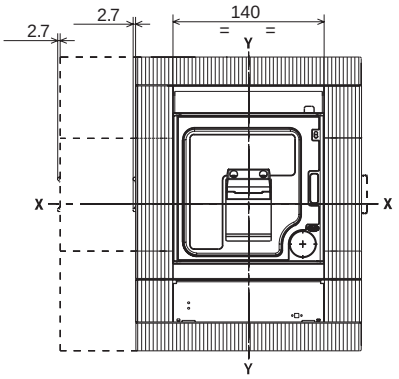

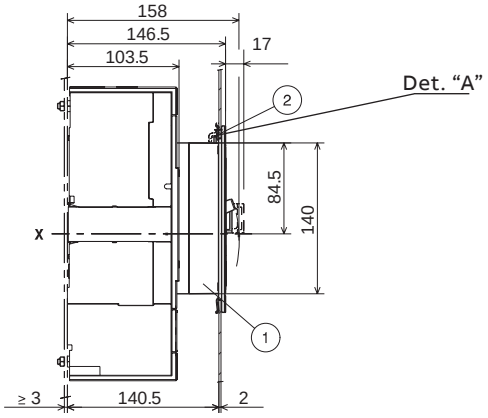

Flange for the compartment door (supplied as standard)

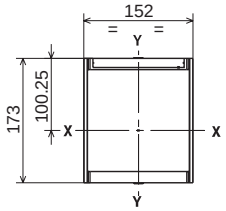

Drilling template for the compartment door

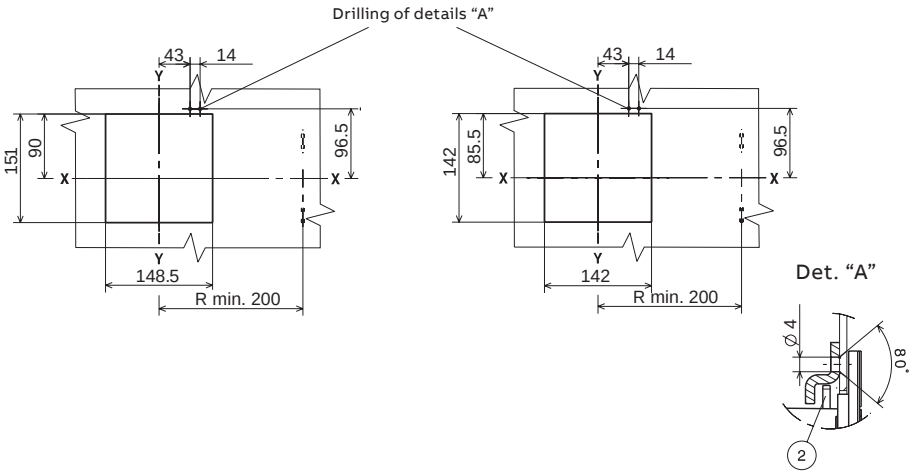

Drilling template for support sheet

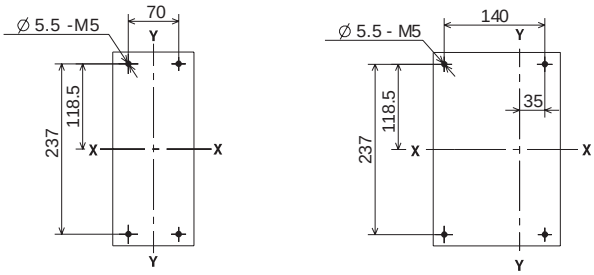

3 POLES 4 POLES

Dimensions of other frames - Tmax T6

Accessories - Withdrawable version

Motor operator

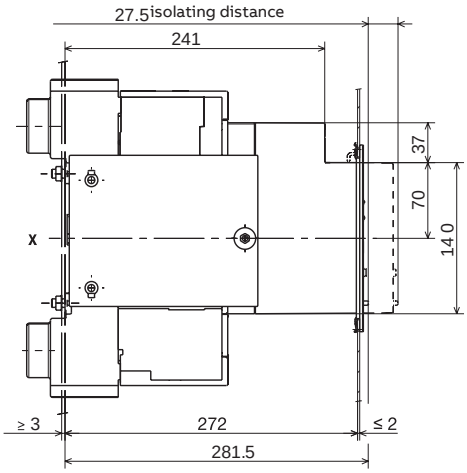

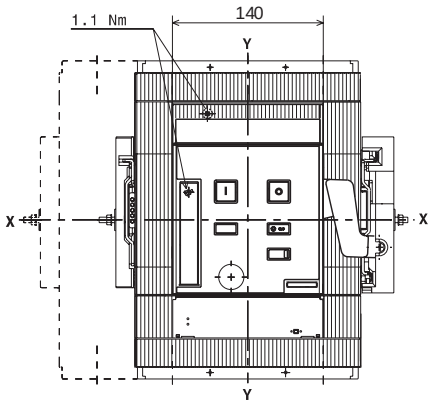

Flange for the compartment door (supplied as standard)

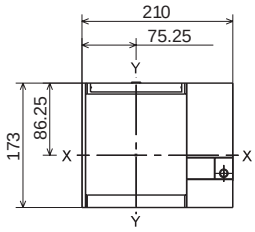

Drilling templates for the compartment door and fitting flange

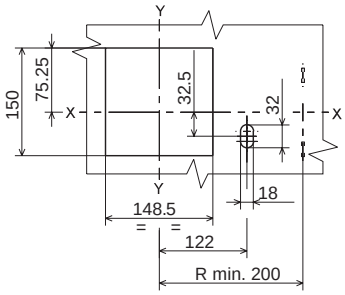

Rotary handle operating mechanism on the circuit-breakers

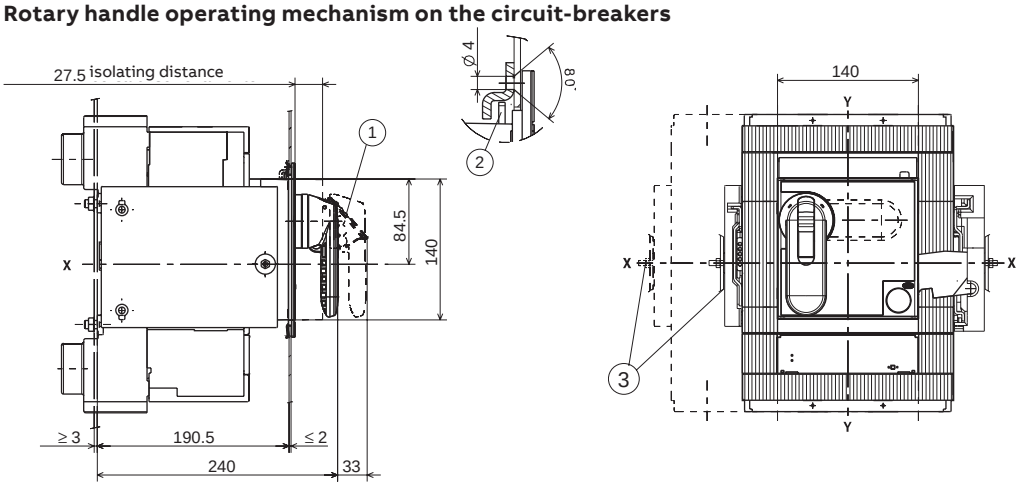

Flange for the compartment door

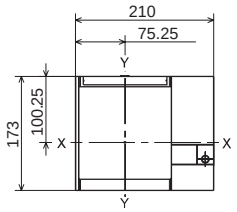

Drilling template for compartment door and fitting flange

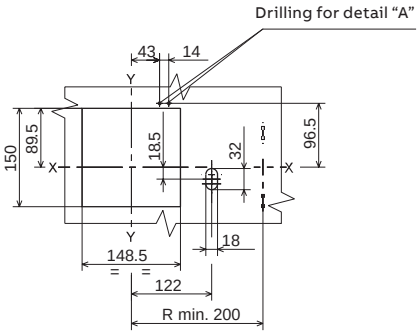

Mechanical interlock

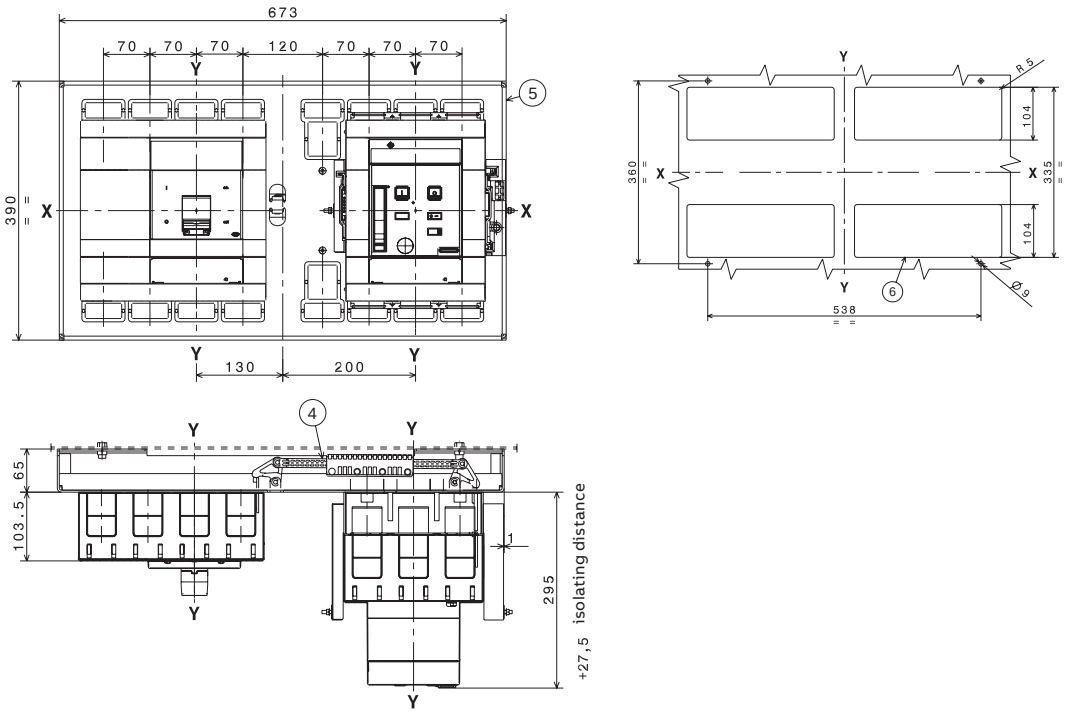

09

WIRING DIAGRAMS

9/2 **Power connection**

9/2 Circuit Breakers and switch disconnectors for DC applications ≥1000V DC - IEC

9/5 Circuit Breakers and switch disconnectors for DC applications ≥1000V DC - UL

9/8 **Reading information**

9/8 Information on how to read the diagrams

9/10 Description of figures

9/12 Graphical symbols for electrical diagrams (60617 IEC Standards)

9/13 **Wiring Diagrams**

9/13 Circuit Breakers and switch disconnectors for AC applications

9/14 Electrical accessories for Circuit Breakers and swich disconnectors (AC and DC applications)

Power connection

Circuit Breakers and switch disconnectors for DC applications ≥1000V DC - IEC

Tmax T circuit breakers for applications up to 1000V DC in compliance with IEC60947-2

Wiring without jumpers

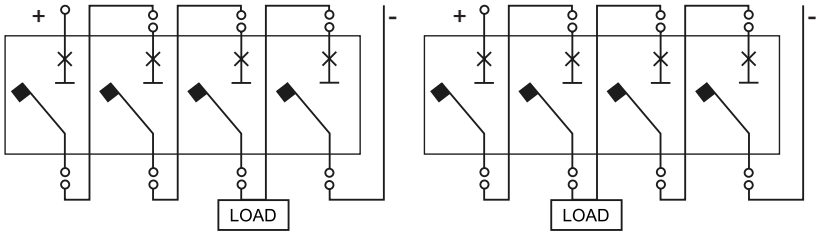

Wiring with jumpers

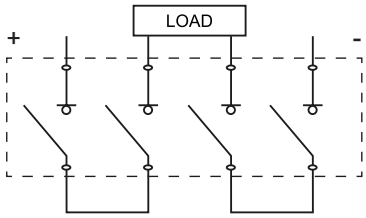

TMAX PV SWITCH-DISCONNECTORS UP TO 1100V DC IN COMPLIANCE WITH IEC60947-3

Configuration & Supply		EF	FCCu	FCCuAl	HR	ES	F
Size							
T4D/PV	2+2 - lower 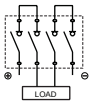	●	●	●			●
	2+2 - upper 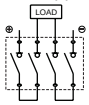	●	●	●			●
	4PS - lower 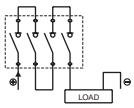	●	●	●			●
	4PS - upper 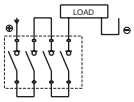	●	●	●			●
T5D/PV	2+2 - lower 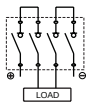	●	●				●
	2+2 - upper 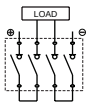	●	●				●
	4PS - lower 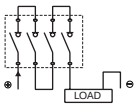	●	●				●
	4PS - upper 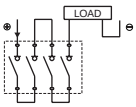	●	●				●

TMAX PV SWITCH-DISCONNECTORS UP TO 1100V DC IN COMPLIANCE WITH IEC60947-3

Configuration & Supply		EF	FCCu	FCCuAl	HR	ES	F
		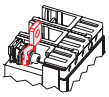	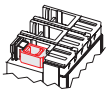	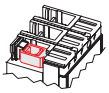	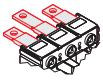	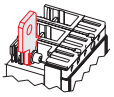	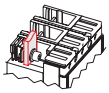
Size							
T6D/PV	2+2 - lower 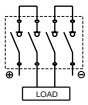	●		●			●
	2+2 - upper 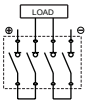			●			●
	4PS - lower 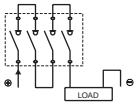	●		●			●
	4PS - upper 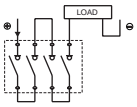			●			●
T7D/PV	2+2 - lower 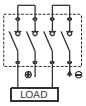	●		●	● 1)	●	●
	2+2 - upper 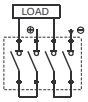	●		●			●
	4PS - lower 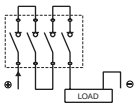	●		●		●	●
	4PS - upper 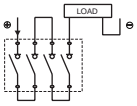	●					●

1) Vertical (VR) terminals can be used too

Power connection

Circuit Breakers and switch disconnectors for DC applications ≥1000V DC - IEC

TMAX PV SWITCH-DISCONNECTORS AND CIRCUIT-BREAKERS UP TO 1500V DC IN COMPLIANCE WITH IEC60947-2 AND IEC60947-3

Configuration & Supply		FCCu	FCCuAl	F[3]
Size				
T4D/PV-E **T4N/PV-E** 	2+2 - lower 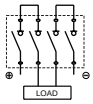	●	●	●
	2+2 - upper 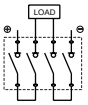	● [2]	● [2]	● [2]
	4PS - lower 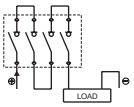	●	●	●
	4PS - upper 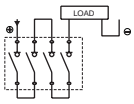	● [2]	● [2]	● [2]
T5D/PV-E 	2+2 - upper 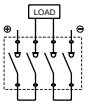	●		●
T7D/PV-E 	2+2 - upper 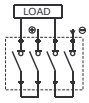		●	●
	2+2 - lower 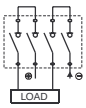		● [1]	● [1]
	4PS - lower 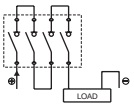		● [1]	● [1]

1) Valid only when 1250 A jumpers are used
2) Not valid for T4N/PV-E 250
3) Not valid for T4N/PV-E

Power connection

Circuit Breakers and switch disconnectors for DC applications ≥1000V DC - UL

TMAX PV SWITCH-DISCONNECTORS AND AUTOMATIC CIRCUIT-BREAKERS UP TO 1000V DC IN COMPLIANCE WITH UL 489B

Configuration & Supply		EF	FCCu	FCCuAl	ES	F
		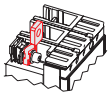			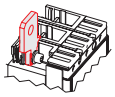	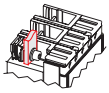
Size						
T4N-D/PV - T4N/PV	2+1 - lower 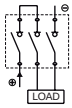			● 1)		
	3PS - lower			● 1)		
	3PS - upper 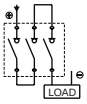			● 1)		

1) Included with jumpers kit

Power connection

Circuit Breakers and switch disconnectors for DC applications ≥1000V DC - UL

TMAX PV SWITCH-DISCONNECTORS AND AUTOMATIC CIRCUIT-BREAKERS UP TO 1000V DC IN COMPLIANCE WITH UL 489B

Configuration & Supply		EF	FCCu	FCCuAl	ES	F
		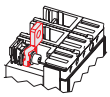		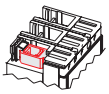		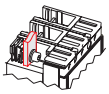
Size						
T5N-D/PV - T5N/PV	2+1 - lower		● 1) 3)	● 2) 3)	● 4)	
	3PS - lower 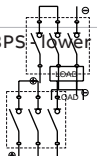		● 1) 3)	● 2) 3)	● 4)	
	3PS - upper 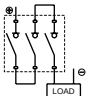		● 1) 3)	● 2) 3)	● 4)	
T6N-D/PV - T6N/PV	2+2 - lower 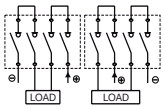	● 4)		● 3)		
	4PS - lower 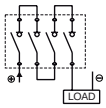	● 4)		● 3)		

1) T5 300-400A only
2) T5 225-250A only
3) Included with jumper kit "cable type"
4) Included with jumper kit "busbar type"

TMAX PV SWITCH-DISCONNECTORS UP TO 1500V DC IN COMPLIANCE WITH UL 489B

Configuration & Supply		EF	FCCu	FCCuAl	ES	F
Size						
T7N-D/PV	2+2 - lower 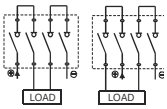			● 3)		● 4)
	2+2 - upper 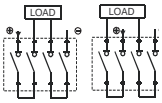			● 3)		● 4)
	4PS - lower 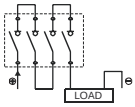			● 3)		● 4)
	4PS - upper 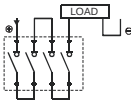			● 3)		● 4)
T7N-D/PV-E	2+2 - lower 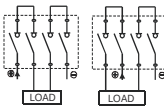	● 1) 5)		● 2) 3)		● 2) 4)
	2+2 - upper 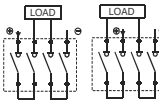	● 1) 5)		● 2) 3)		● 2) 4)
	4PS - lower 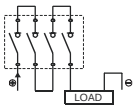	● 1) 5)		● 2) 3)		● 2) 4)
	4PS - upper 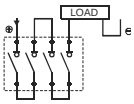	● 1) 5)		● 2) 3)		● 2) 4)

1) Mandatory for T7 1200A
2) T7 1000A only
3) Included with jumper kit "cable type"
4) Included with jumper kit "busbar type"
5) Included with jumper kit

Reading information

Information on how to read the diagrams

State of operation represented

The diagrams is shown in the following conditions:

- plug-in version circuit-breaker open and racked-in
- contactor for motor starting open
- circuits de-energised
- trip units not tripped
- motor operator with springs charged.

Version

The diagram shows a circuit-breaker or switch-disconnector in the plug-in version (only T4 and T5) or in the withdrawable version (T6). The diagram is also valid for the fixed and withdrawable version circuit-breakers or switch-disconnectors. With the fixed version circuit-breakers or switch-disconnectors, the applications indicated in figures 26-27-28-29-30-31 and 32 cannot be provided.

Caption

◻	= Figure number of the diagram
*	= See note indicated by the letter
A1	= Circuit-breaker applications
A12	= AUX-E type signalling unit, with auxiliary relays for electrical signalling of circuit-breaker open and circuit-breaker tripped
A13	= LD030 DO type signalling unit, with relays for electrical signalling of the protection functions of electronic trip unit
A14	= MOE-E type actuation unit, with auxiliary relays for carrying out the commands coming from the dialogue unit
A15	= PR212/CI type contactor control unit for motor starting
A16	= Solenoid operating mechanism
A17	= Unit for M motor electrical latching
A18	= VM210 type voltage measuring unit
A19	= Interface unit (display) type HMI030-CAN
A2	= Applications of the solenoid operator or motor operator
A3	= Applications of the RC222 or RC223 type residual current release
A4	= Indication apparatus and connections for control and signalling, outside the circuit-breaker
D	= Electronic time-delay device of the undervoltage release (outside the circuit-breaker)
H,H1	= Signalling lamps
K	= Contactor for motor starting
K51	= Electronic trip unit:

- PR221 type overcurrent release, with the following protection functions:
  - L against overload with inverse long time delay
  - S against short-circuit with inverse or definite short time delay
  - I against short-circuit with instantaneous trip
  - PR222DS/P, PR222DS/PD, PR223DS or Ekip E, type overcurrent release, with the following protection functions:
  - L against overload with inverse long time delay
  - S against short-circuit with inverse or definite short time delay
  - I against short-circuit with instantaneous trip time
  - G against earth fault with short time trip
- Ekip M-LRIU motor protection type trip unit, with the following protection functions:
  - against overload (thermal protection)
  - against rotor block
  - against short-circuit
  - against phase loss or current unbalance among phases

D01...08	= Contact for electrical signalling of the protection functions of the electronic trip unit
K87	= RC222 or RC223 type residual current trip unit
M	= Motor for circuit-breaker opening and circuit-breaker closing spring charging
M1	= Three-phase asynchronous motor
Q	= Main circuit-breaker
Q/0,1,2,3	= Auxiliary circuit-breaker contacts
R	= Resistor (see note F)
R1	= Motor thermistor
S3/1	= Change-over contact for electrical signalling of ocal/remote selector status
S4/1-2	= Contacts activated by the circuit-breaker rotary handle (see note C
S51/S	= Contact for electrical signalling of overload in progress (start)

S75I/1...3 = Contacts for electrical signalling of circuit-breaker in racked-in position (only provided with circuit-breakers in plug-in and withdrawable version)
S75S/1...3=Contacts for electrical signalling of circuit-breaker in racked-out position (only provided with circuit-breakers in plug-in and withdrawable version)
S87/1 = Contact for electrical signalling of RC222 or RC223 type residual current release pre-alarm
S87/2 = Contact for electrical signalling of RC222. Change-over contact for electrical signalling of local/remote selector status type residual current release alarm
S87/3 = Contact for electrical signalling of circuit-breaker open due to RC222 or RC223 type residual current release trip
SC = Pushbutton or contact for closing the circuit-breaker
SC3 = Pushbutton for motor starting
SD = Switch-disconnector of the power supply of the RC222 type residual current release
SO = Pushbutton or contact for opening the circuit-breaker
SO1, SO2 = Pushbuttons or contacts for the circuit-breaker
S03 = Pushbutton for stopping the motor
SQ = Contact for electrical signalling of circuit-breaker open
SY = Contact for electrical signalling of circuit-breake open due to YO, YO1, YO2 or YU thermomagnetic trip unit intervention (tripped position)
TI = Toroidal current transformer
TI/L1 = Current transformer placed on phase L1
TI/L2 = Current transformer placed on phase L2
TI/L3 = Current transformer placed on phase L3
TI/N = Current transformer placed on the neutral
W1 = Serial interface with the control system (EIA RS485 interface. See note D)
X1,X2,X5...X9 = Connectors for the circuit-breaker auxiliary circuits (in the case of circuit-breakers in plug-in version, removal of the connectors takes place simultaneously with that of the circuit-breaker. See note E)
X11 = Back-up terminal box
X3,X4 = Connectors for the circuits of the electronic trip unit (in the case of circuit-breakers in the plug-in version, removal of the connectors takes place simultaneously with that of the circuit-breaker)
XA = Interfacing connector of the PR222DS/P, PR222DS/PD, PR223DS trip unit
XA1 = Three-way connector for YO/YU (see note E)
XA10 = Six-way connector for solenoid operator
XA2 = Twelve-way connector for auxiliary contacts (see note E)
XA5 = Three-way connector for contact of electrical signalling of circuit-breaker open due to trip of the RC222 or RC223 type residual current release (see note E)
XA6 = Three-way connector for contact of electrical signalling of circuit-breaker open due to trip of the overcurrent release (see note E)
XA7 = Six-way connector for auxiliary contacts (see note E)
XA8 = Six-way connector for contacts operated by the rotary handle or for the motor operator (see note E)
XA9 = Six-way connector for the electrical signalling of RC222 or RC223 type residual current release pre-alarm and alarm and for opening by means of the release itself (see note E)
XB,XC,XE = Interfacing connectors of the AUX-E unit
XF = Interfacing connector of the MOE-E unit
X0 = Connector for the YO1 trip coil
X0 1 = Connector for the YO2 trip coil
XV = Terminal boxes of the applications
YC = Closing release of the motor operating mechanism
YO = Opening release
YO1 = Trip coil of the electronic trip unit
YO2 = Trip coil of the RC222 or RC223 type residual current release
YU = Undervoltage release (see note B).

Reading information

Description of figures

Fig 1 = Opening release.
Fig 2 = Permanent opening release.
Fig3 = Instantaneous undervoltage release (see note B and F).
Fig 4 = Undervoltage release with electronic time-delay device outside the circuit-breaker (see note B).
Fig 5 = Instantaneous undervoltage release in version for machine tools with one contact in series (see note B, C, and F).
Fig 6 = Instantaneous undervoltage release in version for machine tools with two contacts in series (see note B, C, and F).
Fig 7 = One changeover contact for electrical signalling of circuit-breaker open due to RC222 or RC223 type residual current release trip.
Fig 8 = RC222 or RC223 type residual current release circuits.
Fig 9 = Two electrical signalling contacts for RC222 or RC223 type residual current release pre-alarm and alarm.
Fig 11 = Stored energy motor operator.
Fig 12 = Local/remote auxiliary contact for stored-energy motor operating mechanism.
Fig 21 = Three changeover contacts for electrical signalling of circuit-breaker open or closed and one changeover contact for electrical signalling of circuit-breaker open due to YO, YO1, YO2 and YU thermomagnetic trip unit intervention (tripped position).
Fig 22 = One changeover contact for electrical signalling of circuit-breaker open or closed and a changeover contact for electrical signalling of circuit-breaker open due to YO, YO1, YO2 or YU the thermomagnetic trip unit intervention (tripped position).
Fig 23 = Two changeover contacts for electrical signalling of circuit-breaker open or closed.
Fig 24 = One changeover contact for electrical signalling of circuit-breaker open due to overcurrent release trip (T6).
Fig 25 = One NO contact for electrical signalling of circuit-breaker open due to over current release trip (T4-T5).
Fig 26 = First position of circuit-breaker changeover contact, for electrical signalling of racked-in.
Fig 27 = Second position of circuit-breaker changeover contact, for electrical signalling of racked-in.
Fig 28 = Third position of circuit-breaker changeover contact, for electrical signalling of racked-in.
Fig 29 = First position of circuit-breaker changeover contact, for electrical signalling of isolated.
Fig 30 = Second position of circuit-breaker changeover contact, for electrical signalling of isolated.
Fig 31 = Third position of circuit-breaker changeover contact, for electrical signalling of isolated.
Fig 32 = Circuit of the current transformer on neutral conductor outside the circuit-breaker (for plug-in and withdrawable version circuit-breaker).
Fig 39 = Auxiliary circuits of the PR223DS trip units connected to VM210 voltage measuring unit.
Fig 42 = Auxiliary circuits of PR222DS/PD, PR223DS electronic trip unit connected to LD 030D0 signalling unit.
Fig 44 = Auxiliary circuits of the PR222DS/PD, PR223DS electronic trip unit connected with the AUX-E auxiliary contacts
Fig 45 = Auxiliary circuits of the PR222DS/PD, PR223DS electronic trip unit connected with the auxiliary contacts AUX-E and with MOE-E type actuation unit.
Fig 46 = Auxiliary circuits of the PR222DS/PD, PR223DS electronic trip unit connected with the AUX-E auxiliary contacts.
Fig 47 = Auxiliary circuits of Ekip M-LRIU electronic trip unit connected to PR212/CI contactor control unit (see note I).
Fig 48 = Auxiliary circuits of Ekip M-LRIU electronic trip unit with auxiliary supply connected to PR212/CI contactor control unit with MODBUS RS485 communication option (see note I).
Fig 49 = Auxiliary circuits of Ekip M-LRIU electronic trip unit connected to PR212/CI contactor control unit and to AF series contactor (see note I).
Fig 50 = Auxiliary circuits of Ekip M-LRIU electronic trip unit with auxiliary supply connected to PR212/CI contactor control unit and AF series contactor with MODBUS RS485 communication option (see note I).
Fig 51 = Auxiliary circuits of Ekip E-LSIG electronic trip unit connected to AUX-E electronic auxiliary contacts, MOE-E motor operator and to HMI030 front panel display.

Incompatibility

The circuits indicated by the following figures cannot be supplied at the same time on the same circuit-breaker:

1 - 2 - 3 - 4 - 5 - 6
5 - 6 - 11
10 - 11 - 45
10 - 12
21 - 22 - 23 - 44 - 45 - 46
24 - 25
26 - 32
39 - 40 - 41 - 42 - 43 - 44 - 45 - 46 - 47 - 48 - 49 - 50 - 51

Notes

A) The circuit-breaker is only fitted with the applications specified in the ABB SACE order confirmation. To make out the order, please consult this catalogue.

B) The undervoltage release is supplied for power supply branched on the supply side of the circuit-breaker or from an independent source: circuit-breaker closing is only allowed with the release energised (the lock on closing is made mechanically).

C) The S4/1 and S4/2 contacts shown in figures 5-6 open the circuit with the circuit-breaker open and close it again when a manual closing command is given by means of the rotary handle, in accordance with the Standards regarding machine tools (in any case, closing does not take place if the undervoltage release is not supplied).

E) Connectors XA1, XA2, XA5, XA6, XA7, XA8 and XA9 are supplied on request. They are always supplied with T4 and T5 circuit-breakers in the plug-in version equipped with unwired electronic accessories. Connectors X1, X2, X5, X6, X7, X8 and X9 are supplied on request. They are always supplied with T4, T5 and T6 circuit-breakers in the fixed version or in the withdrawable version equipped with unwired electronic accessories.

F) Additional external resistor for undervoltage release supplied at 250 V DC, 380/440 V AC and
480/500 V AC.

G) In the case of fixed version circuit-breaker with current transformer on external neutral conductor outside the circuit-breaker, when the circuit-breaker is to be removed, it is necessary to short-circuit the terminals of the TI/N transformer.

H) SQ and SY contacts of AUX-E signalling unit are opto-isolated contacts.

I) The connection to poles 3-4 of X4 connector can be used in two ways: connecting a generic digital input or connecting the motor thermistor. The two functions are alternative.

Reading information

Graphical symbols for electrical diagrams (60617 IEC Standards)

Graphical symbols for electrical diagrams (Standards IEC 60617)

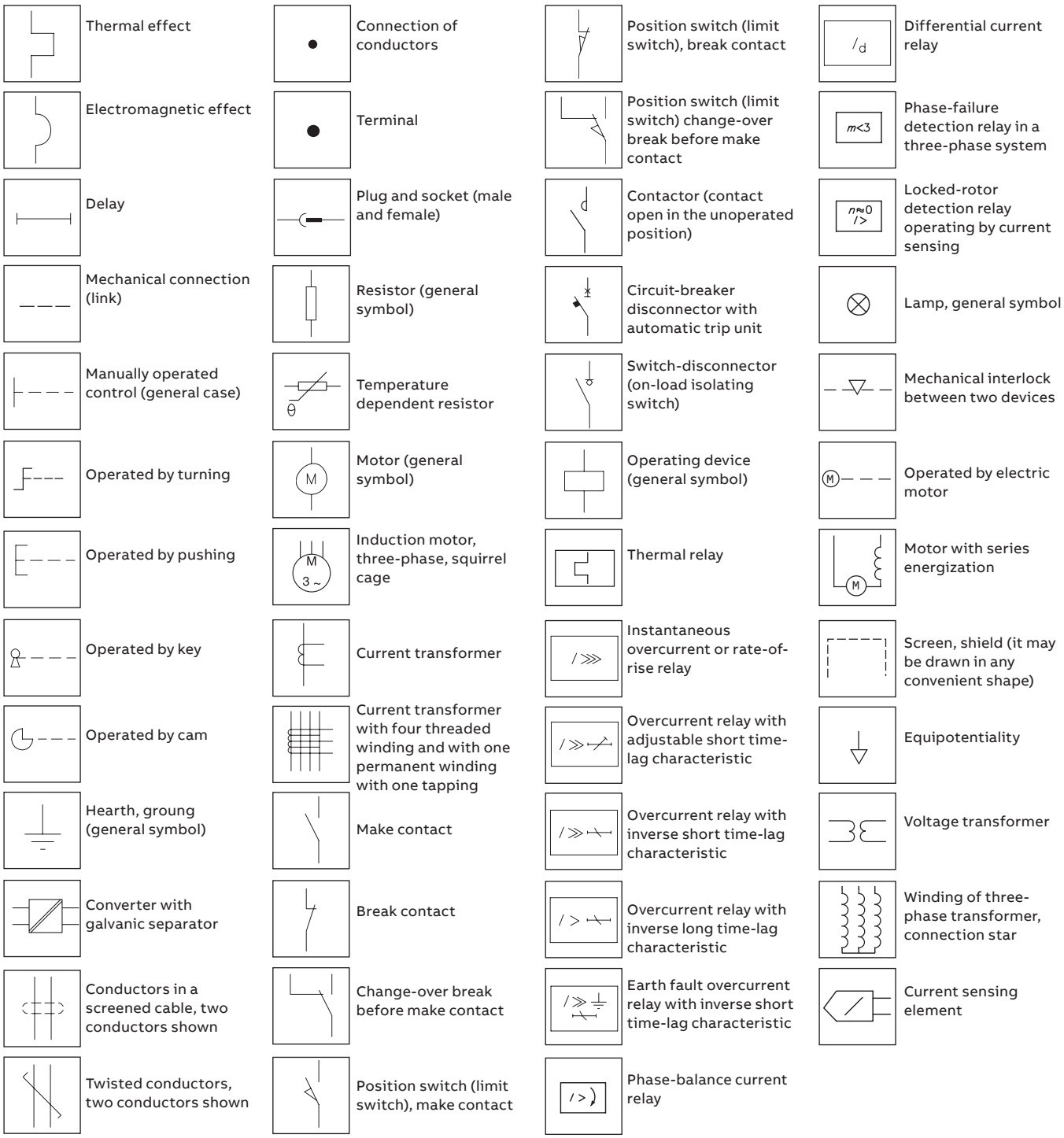

Wiring Diagrams

Circuit Breakers and switch disconnectors for AC applications

State of operation

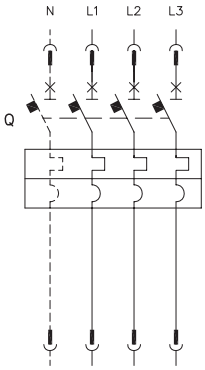

Three-pole or four-pole circuit-breaker with thermomagnetic trip unit

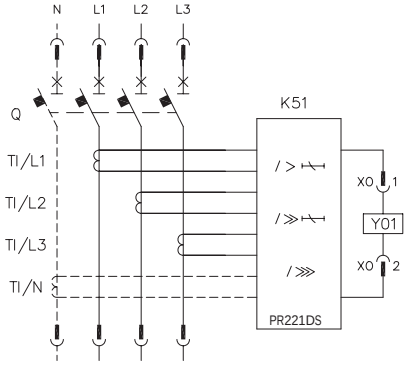

Three-pole or four-pole circuit-breaker with PR221 electronic trip unit

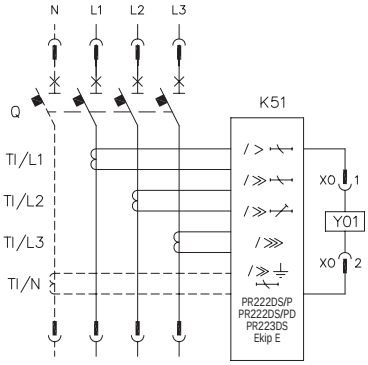

Three-pole or four-pole circuit-breaker with PR222DS/P, PR222DS/PD, PR223DS, or Ekip E electronic trip unit for T4, T5 and T6 (PR222DS/PD for T5 and T6 only)

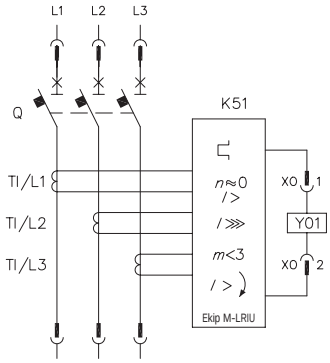

Three-pole circuit-breaker with Ekip M-LRIU electronic trip unit

Wiring Diagrams

Electrical accessories for Circuit Breakers and swich disconnectors
(AC and DC applications)

Shunt opening and undervoltage releases

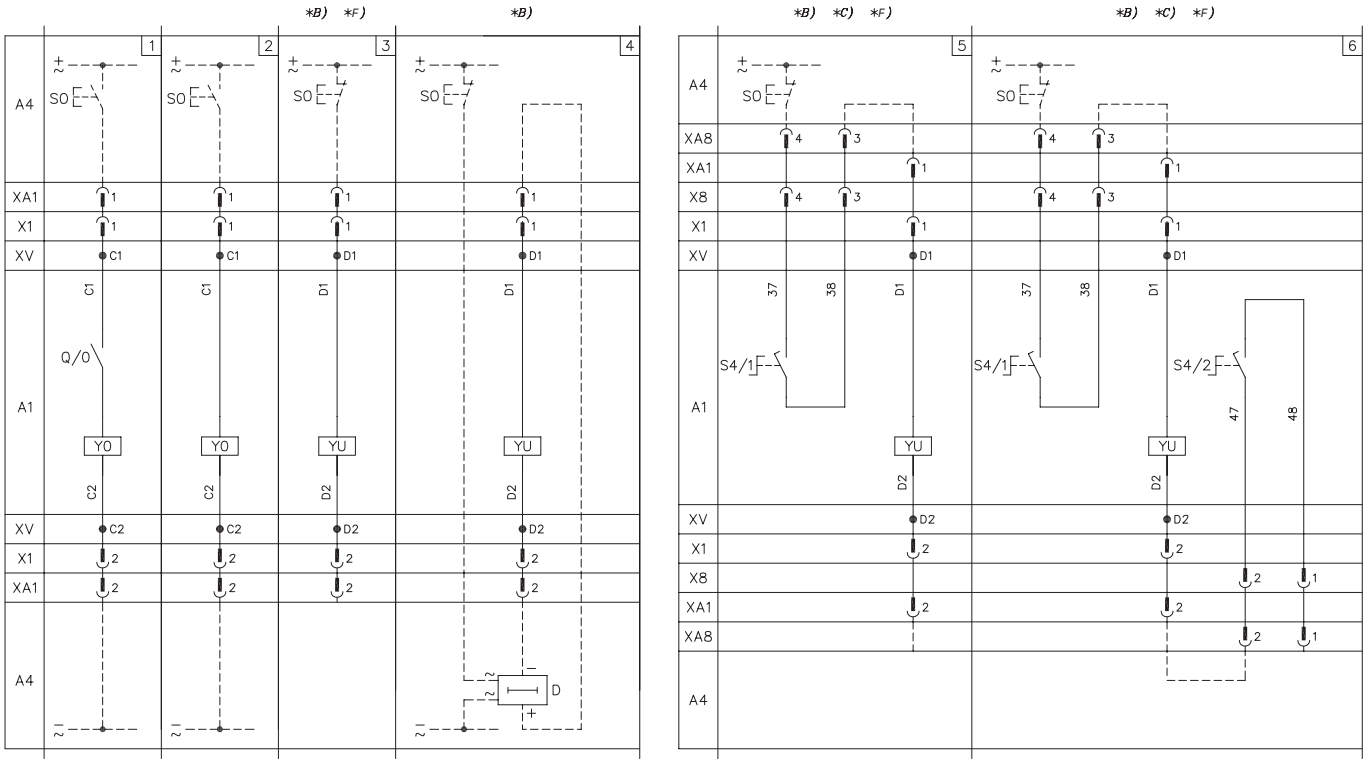

Auxiliary contacts

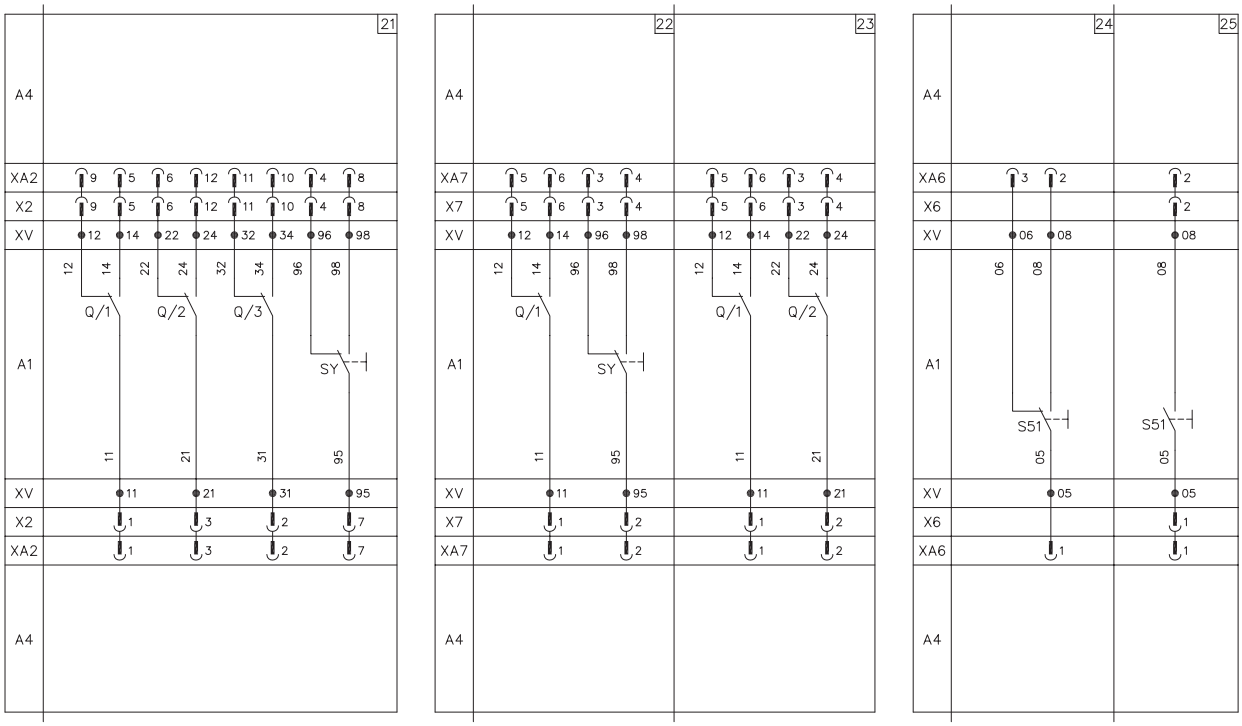

Position contacts

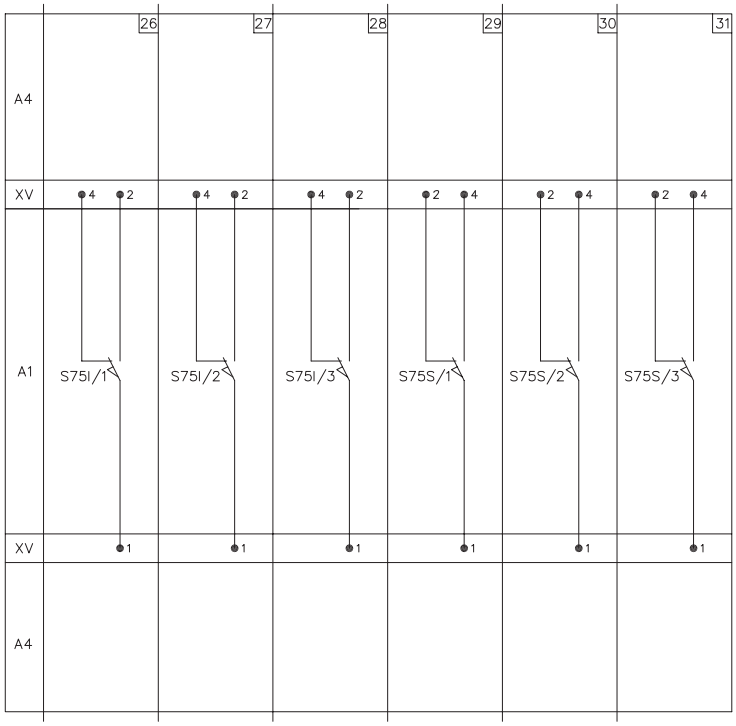

Wiring Diagrams

Electrical accessories for Circuit Breakers and swich disconnectors
(AC and DC applications)

PR222DS/PD, PR223DS electronic trip unit connected with LD030 DO signalling unit

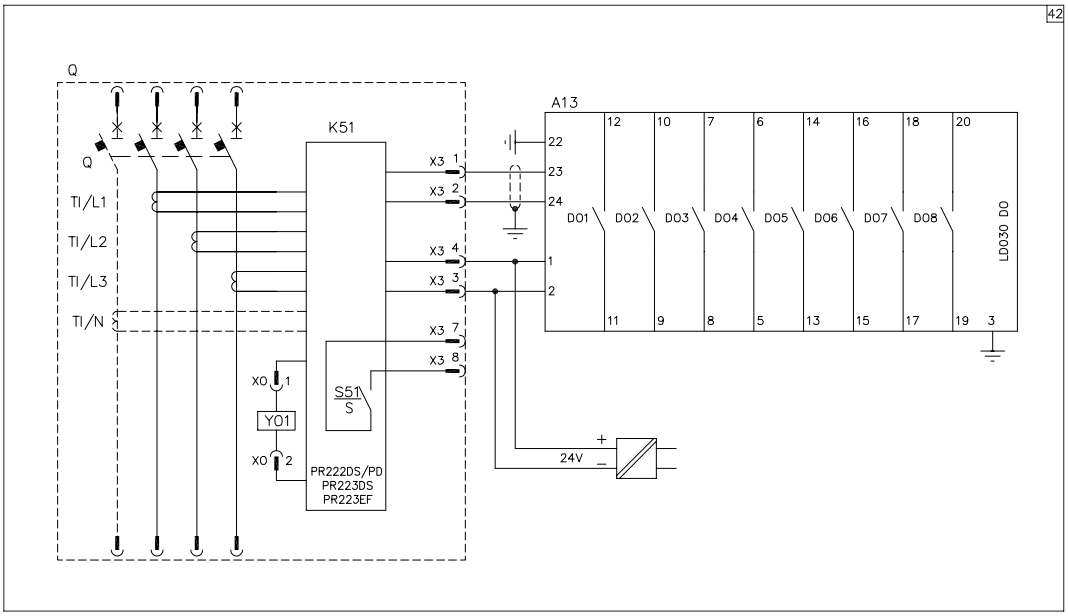

PR222DS/PD, PR223DS electronic trip unit connected with the AUX-E auxiliary contacts

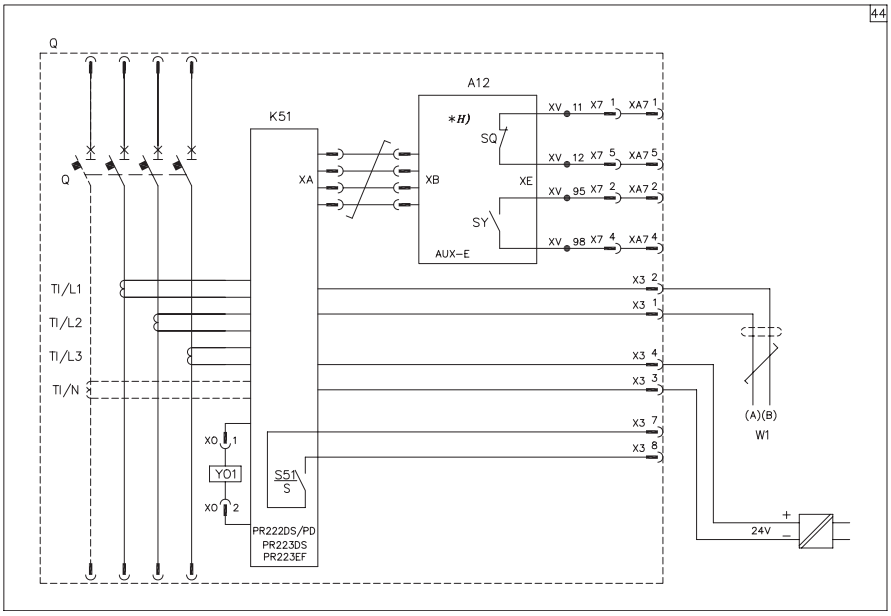

PR222DS/PD, PR223DS electronic trip unit connected with the AUX-E auxiliary contacts and the MOE-E actuation unit

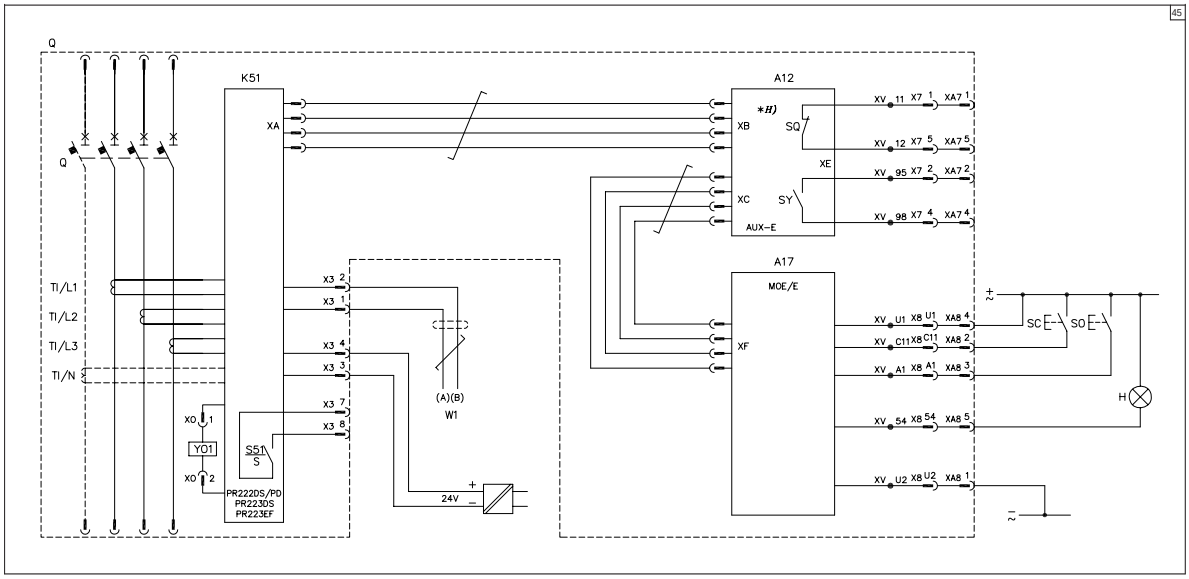

PR222DS/PD, PR223DS electronic trip unit connected with the AUX-E auxiliary contacts

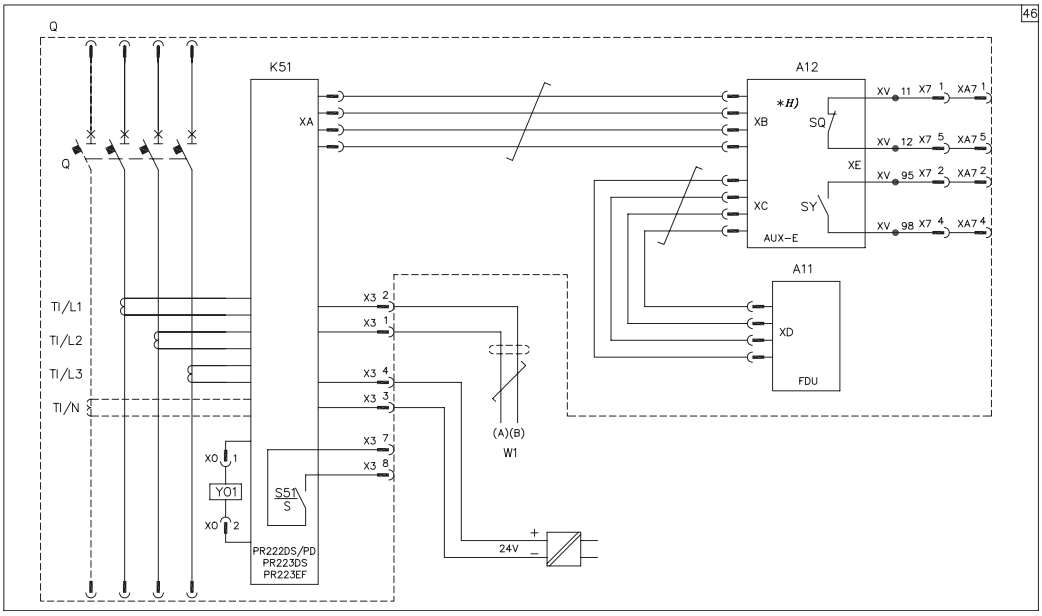

Wiring Diagrams

Electrical accessories for Circuit Breakers and swich disconnectors
(AC and DC applications)

Ekip M-LRIU electronic trip unit connected to PR212/CI contactor control unit

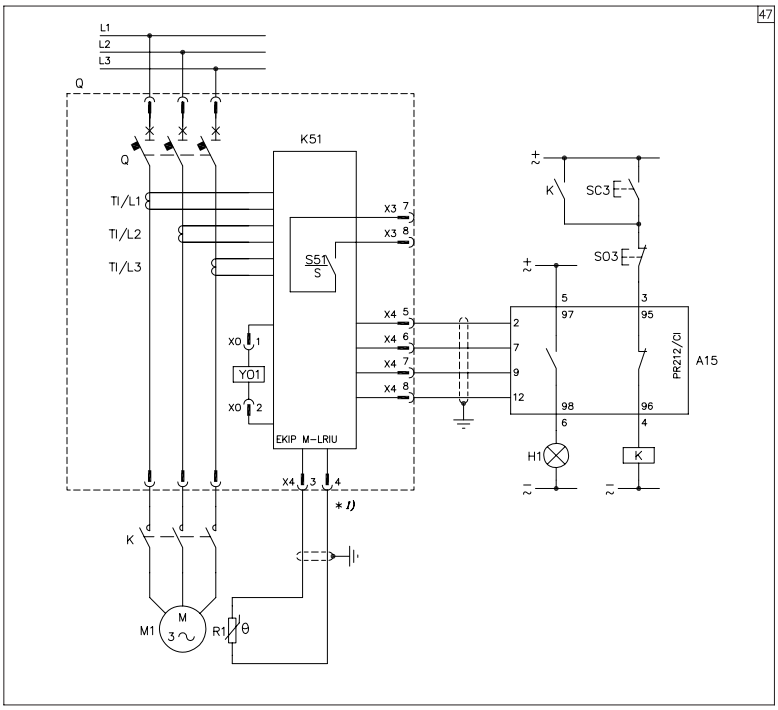

Ekip M-LRIU electronic trip unit with auxiliary supply connected to PR212/CI contactor control unit with MODBUS RS485 communication option

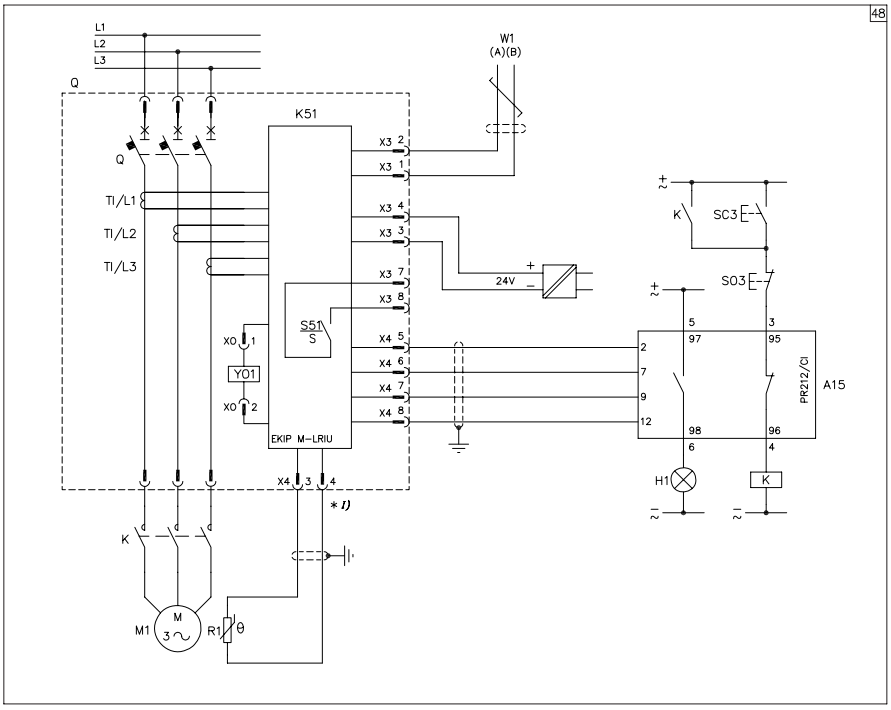

Ekip M-LRIU electronic trip unit connected to PR212/CI contactor control unit and to AF series contactor

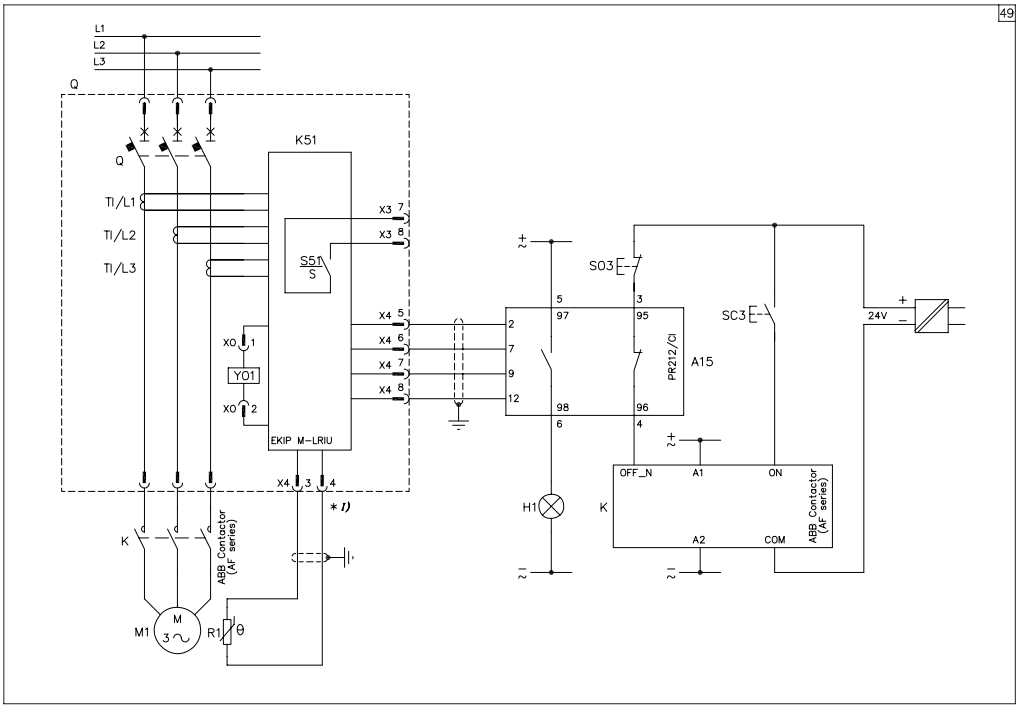

Ekip M-LRIU electronic trip unit with auxiliary supply connected to PR212/CI contactor control unit and AF series contactor with MODBUS RS485 communication option

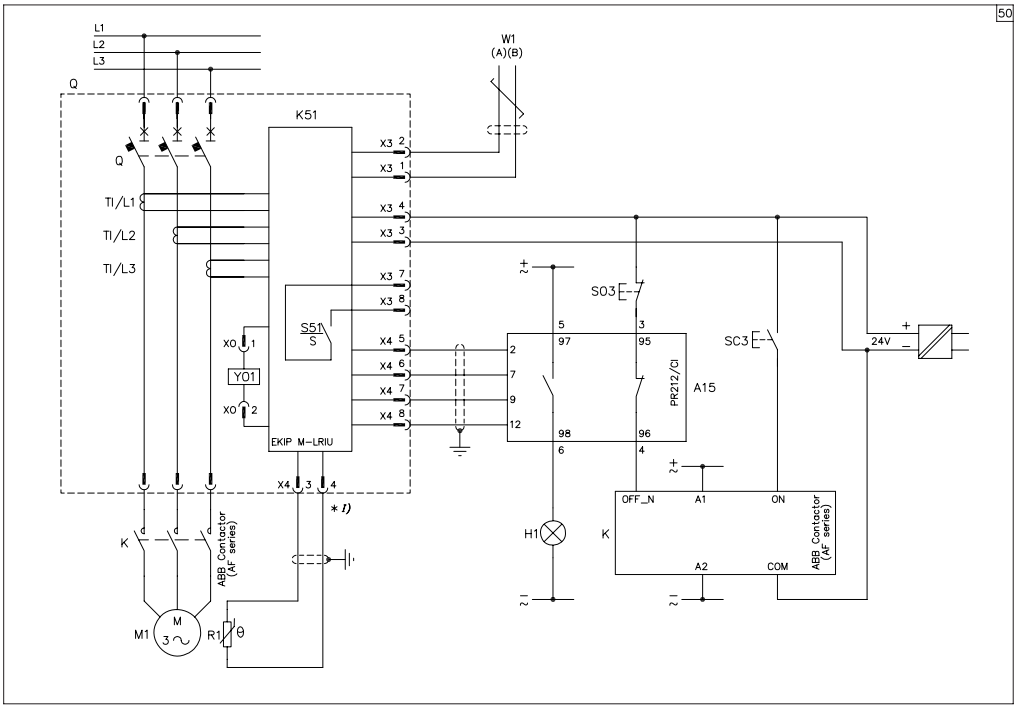

10

ORDERING CODES

10/2 **Circuit Breakers and switch disconnectors Tmax T-PV for DC applications ≥1000V DC - IEC**

10/4 **Circuit Breakers and switch disconnectors Tmax T-PV for DC applications ≥1000V DC - UL**

10/6 **Circuit breakers and switch disconnectors for AC applications ≥800V AC Tmax T-HA for applications up to 800V AC**

10/7 **Circuit Breakers Tmax T for AC application up to 1150V AC - DC applications up to 1000V DC**

10/10 **Fixed parts, conversion kit and accessories for fixed parts**

10/13 **Accessories**

Circuit Breakers and switch disconnectors Tmax T-PV for DC applications ≥1000V DC - IEC

CIRCUIT-BREAKERS

Code	Description
1SDA082910R1	T4N/PV-E 250 TMF 100 4p F F 1500V DC
1SDA082911R1	T4N/PV-E 250 TMF 125 4p F F 1500V DC
1SDA082912R1	T4N/PV-E 250 TMF 160 4p F F 1500V DC
1SDA082913R1	T4N/PV-E 250 TMF 200 4p F F 1500V DC
1SDA082914R1	T4N/PV-E 250 TMF 250 4p F F 1500V DC

For circuit-breakers at 1000V DC, see catalog Tmax T code 1SDC210015D0208.

SWITCH-DISCONNECTOR

Code	Description
1SDA069823R1	T4D/PV 250 4p F F 1100V DC
1SDA069824R1	T5D/PV 500 4p F F 1100V DC
1SDA069825R1	T6D/PV 800 4p F F 1100V DC
1SDA069826R1	T7D/PV 1250 4p F F 1100V DC
1SDA069827R1	T7D/PV 1250 4p F F M 1100V DC
1SDA069828R1	T7D/PV 1600 4p F F 1100V DC
1SDA069829R1	T7D/PV 1600 4p F F M 1100V DC
1SDA073559R1	T4D/PV-E 250 4p F F 1500V DC
1SDA076898R1	T5D/PV-E 500 4p FF 1500V DC
1SDA073560R1	T7D/PV-E 1250 4p F F M 1500V DC
1SDA073561R1	T7D/PV-E 1600 4p F F M 1500V DC

JUMPER KIT

Code	Description
1SDA070454R1	KIT 2JUMPER U 2+2PS T4D/PV 250
1SDA070455R1	KIT 3JUMPER U 4PS T4D/PV 250
1SDA085254R1	KIT 2JUMPER U 2+2PS T4N/PV-E 200 1500V DC
1SDA085255R1	KIT 3JUMPER U 4PS T4N/PV-E 200 1500V DC
1SDA085253R1	KIT 3JUMPER U 4PS T4N/PV-E 250 1500V DC
1SDA085251R1	KIT 2 JUMPER U 2+2PS T4N/PV-E 250 1500V DC
1SDA070456R1	KIT 2JUMPER U 2+2PS T5D/PV 500
1SDA070457R1	KIT 3JUMPER U 4PS T5D/PV 500
1SDA076899R1	KIT 2JUMPER U 2+2PS T5D/PV-E 500 1500V DC
1SDA070491R1	KIT 2JUMPER U 2+2PS T6D/PV 800
1SDA070492R1	KIT 3JUMPER U 4PS T6D/PV 800
1SDA070429R1	KIT JUMPER U 2+2PS T7D/PV 1250
1SDA070431R1	KIT JUMPER U 2+2PS T7D/PV 1600
1SDA070430R1	KIT JUMPER U 4PS T7D/PV 1250
1SDA070432R1	KIT JUMPER U 4PS T7D/PV 1600

Tmax PV can be accessoried with Tmax T series accessories, except for the following exceptions.

Frame size	Incompatibilities
T4D PV	Interlocks
T5D PV	Interlocks
T6D PV	Interlocks
T7D PV	Interlocks
T7D PV M	Interlocks

Accessories part number, wirings and data can be found in the Tmax T IEC technical catalog code 1SDC210015D0208.

WIRE OPTIONS TMAX PV - IEC

Code	Description
1SDA054980R1	FcCu T4 1x185mm² 3pcs
1SDA054981R1	FcCu T4 1x185mm² 4pcs
1SDA054988R1	FcCuAl T4 1x185mm² 3pcs
1SDA054989R1	FcCuAl T4 1x185mm² 4pcs
1SDA055364R1	FcCu T5 2x185mm² 3pcs
1SDA055365R1	FcCu T5 2x185mm² 4pcs
1SDA055032R1	FcCuAl T5 2x240mm² 3pcs
1SDA055033R1	FcCuAl T5 2x240mm² 4pcs
1SDA023380R1	FcCuAl T6 2x240mm² 3pcs
1SDA023390R1	FcCuAl T6 2x240mm² 4pcs
1SDA063112R1	FcCuAl T7 4x240mm²3pcs
1SDA063113R1	FcCuAl T7 4x240mm² 4pcs

Circuit Breakers and switch disconnectors Tmax T-PV for DC applications ≥1000V DC - UL

CIRCUIT-BREAKER

Code	Description
1SDA070461R1	T4N/PV 200 UL TMD 40 3p F F 1000V DC
1SDA070462R1	T4N/PV 200 UL TMD 50 3p F F 1000V DC
1SDA070463R1	T4N/PV 200 UL TMA 80-800 3p F F 1000V DC
1SDA070467R1	T4N/PV 200 UL TMA 100-1000 3p FF 1000V DC
1SDA070468R1	T4N/PV 200 UL TMA 125-1250 3p FF 1000V DC
1SDA070469R1	T4N/PV 200 UL TMA 150-1500 3p FF 1000V DC
1SDA070470R1	T4N/PV 200 UL TMA 200-2000 3p FF 1000V DC
1SDA079819R1	T5N/PV 250 UL TMD 1500-3000 3p FF 1000V DC
1SDA079820R1	T5N/PV 225 UL TMD 1500-3000 3p FF 1000V DC
1SDA079818R1	T5N/PV 300 UL TMD 1500-3000 3p FF 1000V DC
1SDA070472R1	T5N/PV 400 UL TMA 400-4000 3p FF 1000V DC
1SDA070495R1	T6N/PV 800 UL TMA 600-6000 4p FF 1000V DC
1SDA070496R1	T6N/PV 800 UL TMA 800-8000 4p FF 1000V DC
1SDA107425R1	T4N/PV-E 200 UL TMF 40 4p F F 1500V DC
1SDA107426R1	T4N/PV-E 200 UL TMF 50 4p F F 1500V DC
1SDA107427R1	T4N/PV-E 200 UL TMF 80 4p F F 1500V DC
1SDA107428R1	T4N/PV-E 200 UL TMF 100 4p F F 1500V DC
1SDA107429R1	T4N/PV-E 200 UL TMF 125 4p F F 1500V DC
1SDA107430R1	T4N/PV-E 200 UL TMF 150 4p F F 1500V DC
1SDA107431R1	T4N/PV-E 200 UL TMF 200 4p F F 1500V DC

SWITCH-DISCONNECTOR

Code	Description
1SDA070460R1	T4N-D/PV 200 MCS UL 3p F F 1000V DC
1SDA070471R1	T5N-D/PV 400 MCS UL 3p F 1000V DC
1SDA070493R1	T6N-D/PV 600 MCS UL 4p F F 1000V DC
1SDA070494R1	T6N-D/PV 800 MCS UL 4p F F 1000V DC
1SDA070448R1	T7N-D/PV 1000 MCS UL 4p F F M 1000V DC
1SDA107436R1	T4N-D/PV-E 200 MCS UL 4p F F 1500V DC
1SDA082657R1	T7N-D/PV-E 1000 MCS UL 4p F F M 1500V DC
1SDA082915R1	T7N-D/PV-E 1200 MCS UL 4p F F M 1500V DC

KIT JUMPERS

Code	Description
1SDA070483R1	KIT 1 JUMPER 2+1PS T4N/PV-B 100A UL 3p
1SDA070484R1	KIT 1 JUMPER 2+1PS T4 PV-B 200A UL 3p
1SDA070485R1	KIT 2 JUMPER 3PS T4N/PV-A 100A UL 3p
1SDA070486R1	KIT 2 JUMPER 3PS T4 PV-A 200A UL 3p
1SDA070487R1	KIT 1 JUMPER 2+1PS T5 PV-B 400 UL 3p cables
1SDA070488R1	KIT 2 JUMPER 3PS T5 PV-A 400 UL 3p cables
1SDA074504R1	KIT 1 JUMPER 2+1PS T5 PV-B 400 UL 3p busbars
1SDA074505R1	KIT 2 JUMPER 3PS T5 PV-A 400 UL 3p busbars
1SDA079821R1	KIT 1 JUMPER 2+1PS T5 PV-B 225 UL 3p
1SDA079823R1	KIT 1 JUMPER 2+1PS T5 PV-B 250 UL 3p
1SDA079824R1	KIT 2 JUMPER 3PS T5 PV-A 225 UL 3p
1SDA079825R1	KIT 2 JUMPER 3PS T5 PV-A 250 UL 3p
1SDA070499R1	KIT 2 JUMPER 2+2PS T6 PV-B 600 UL 4p
1SDA070500R1	KIT 3 JUMPER 4PS T6 PV-A 600 UL 4p
1SDA070501R1	KIT 2 JUMPER 2+2PS T6 PV-B 800 UL 4p
1SDA070502R1	KIT 3 JUMPER 4PS T6 PV-A 800 UL 4p
1SDA070451R1	KIT 2 JUMPER 2+2PS T7N-D/PV-B 1000 UL 4p cables
1SDA070452R1	KIT 3 JUMPER U 4PS T7N-D/PV-A 1000 UL 4p cables
1SDA081762R1	KIT 2 JUMPER 2+2PS T7N-D/PV-B 1000 UL 4p busbars
1SDA081763R1	KIT 3 JUMPER U 4PS T7N-D/PV-A 1000 UL 4p busbars
1SDA083038R1	KIT 2JUMPER 2+2PS T7N-D/PV1200 UL Term.F
1SDA083039R1	KIT 3JUMPER U 4PS T7N-D/PV1200 UL Term.F
1SDA107438R1	KIT 1 JUMPER T4N/PV-E T4N-D/PV-E 100A UL4p
1SDA107439R1	KIT 1 JUMPER T4N/PV-E T4N-D/PV-E 200A UL4p
1SDA107440R1	KIT 2 JUMPER T4N/PV-E T4N-D/PV-E 100A UL4p
1SDA107441R1	KIT 2 JUMPER T4N/PV-E T4N-D/PV-E 200A UL4p
1SDA107442R1	KIT 3 JUMPER T4N/PV-E T4N-D/PV-E 100A UL4p
1SDA107443R1	KIT 3 JUMPER T4N/PV-E T4N-D/PV-E 200A UL4p

Frame size	Incompatibilities
T4D PV	Interlocks
T5D PV	Interlocks
T6D PV	Interlocks
T7D PV	Interlocks
T7D PV M	Interlocks

Accessories part number, wirings and data can be found in the Tmax T UL489 1SDC210023D0201 technical catalog.

Circuit breakers and switch disconnectors for AC applications ≥800V AC
Tmax T-HA for applications up to 800V AC

IEC RANGE ORDERING CODES

Code	Description
1SDA083647R1	T4V-HA250 TMA80-800 4p FF 800V AC
1SDA083648R1	T4V-HA250 TMA100-1000 4p FF800V AC
1SDA083649R1	T4V-HA250 TMA125-1250 4p FF 800V AC N100%
1SDA083650R1	T4V-HA250 TMA160-1600 4p FF 800V AC N100%
1SDA083651R1	T4V-HA250 TMA200-2000 4p FF 800V AC N100%
1SDA083652R1	T4V-HA250 TMA250-2500 4p FF 800V AC N100%
1SDA083653R1	T5V-HA400 TMA320-3200 4p FF 800V AC N100%
1SDA083654R1	T5V-HA400 TMA400-4000 4p FF 800V AC N100%
1SDA083655R1	T5V-HA630 TMA500-5000 4p FF 800V AC N100%
1SDA083658R1	T4V-HA 250 TMA 80-800 3p FF 800V AC
1SDA083659R1	T4V-HA 250 TMA 100-1000 3p FF 800V AC
1SDA083660R1	T4V-HA 250 TMA 125-1250 3p FF 800V AC
1SDA083661R1	T4V-HA 250 TMA 160-1600 3p FF 800V AC
1SDA083662R1	T4V-HA 250 TMA 200-2000 3p FF 800V AC
1SDA083663R1	T4V-HA 250 TMA 250-2500 3p FF 800V AC
1SDA083664R1	T5V-HA 400 TMA 320-3200 3p FF 800V AC
1SDA083665R1	T5V-HA 400 TMA 400-4000 3p FF 800V AC
1SDA083666R1	T5V-HA 630 TMA 500-5000 3p FF 800V AC
1SDA107747R1	T4V-HA250 PR222DS-LSIG In250 3p FF800VAC
1SDA113740R1	T4V-HA250 PR222DS-LSIG In250 4p FF800VAC
1SDA083656R1	T5V-HA630 PR221DS-LS/I In630 3p FF 800V AC
1SDA083667R1	T5V-HA630 PR221DS-LS/I In630 4p FF800V AC
1SDA107745R1	T5X-HA400 PR222DS-LSIG In320 3p FF800VAC
1SDA107746R1	T5X-HA400 PR222DS-LSIG In400 3p FF800VAC
1SDA113737R1	T5X-HA400 PR222DS-LSIG In320 4p FF800VAC
1SDA113739R1	T5X-HA400 PR222DS-LSIG In400 4p FF800VAC

NOTE: High Terminal Covers are mandatory for top and bottom and already included in the circuit-breakers ordering codes

UL RANGE ORDERING CODES

Code	Description	UL rated
1SDA083668R1	T4V-HA250 UL TMA80-800 4p FF 800V AC	100%
1SDA083669R1	T4V-HA250 UL TMA100-1000 4p FF800V AC	100%
1SDA083670R1	T4V-HA250 UL TMA125-1250 4p FF 800V AC	100%
1SDA083671R1	T4V-HA250 UL TMA150-1500 4p FF 800V AC	100%
1SDA083672R1	T4V-HA250 UL TMA200-2000 4p FF 800V AC	80%
1SDA083673R1	T4V-HA250 UL TMA80-800 3p FF 800V AC	100%
1SDA083674R1	T4V-HA250 UL TMA100-1000 3p FF800V AC	100%
1SDA083675R1	T4V-HA250 UL TMA125-1250 3p FF 800V AC	100%
1SDA083676R1	T4V-HA250 UL TMA150-1500 3p FF 800V AC	100%
1SDA083677R1	T4V-HA250 UL TMA200-2000 3p FF 800V AC	80%
1SDA083678R1	T5V-HA400 UL TMA 300-3000 3p FF 800V AC	100%
1SDA083679R1	T5V-HA400 UL TMA300-3000 4p FF 800V AC	100%
1SDA083680R1	T5V-HA400UL PR221DS-LS/I In300 3p FF 800V AC	100%
1SDA083681R1	T5V-HA400UL PR221DS-LS/I In300 4p FF 800V AC	100%
1SDA104664R1	T5X-HA 400 UL TMA 300-3000 3p F F 800VAC	100%
1SDA104665R1	T5X-HA400 UL TMA300-3000 4pFF 800VAC N%	100%
1SDA104666R1	T5X-HA400UL PR221DS-LS/I In300 3p FF800V	100%
1SDA104667R1	T5X-HA400UL PR221DS-LS/I In300 4p FF800V	100%

WIRE OPTIONS TMAX PV - IEC/UL

Code	Description
1SDA054988R1	FcCuAL T4 3pcs 1x350kcmil
1SDA054989R1	FcCuAL T4 4pcs 1x350kcmil
1SDA055020R1	FcCuAL T5 3pcs 1x500kcmil
1SDA055021R1	FcCuAL T5 4pcs 1x500kcmil
1SDA054980R1	FcCu T4 1x185mm^2 3pcs
1SDA054981R1	FcCu T4 1x185mm^2 4pcs
1SDA054988R1	FcCuAl T4 1x185mm^2 3pcs
1SDA054989R1	FcCuAl T4 1x185mm^2 4pcs
1SDA055016R1	FcCu T5 1x240mm^2 3pcs
1SDA055017R1	FcCu T5 1x240mm^2 4pcs
1SDA055020R1	FcCuAl T5 1x240mm^2 3pcs
1SDA055021R1	FcCuAl T5 1x240mm^2 4pcs
1SDA055032R1	FcCuAl T5 2x240mm^2 3pcs
1SDA055033R1	FcCuAl T5 2x240mm^2 4pcs

Circuit Breakers Tmax T for AC application up to 1150V AC - DC applications up to 1000V DC

T4 250 – FIXED (F) – 3 POLES - FRONT TERMINALS FOR COPPER CABLES (FC CU)

Electronic trip unit	In	Icu (1000 V AC) Icu (1150 V AC)	L (12 kA)	V (20 kA - 12 kA)
PR221DS-LS/I	100		1SDA054505R1	1SDA054513R1
PR221DS-I	100		1SDA054506R1	1SDA054514R1
PR222DS/P-LSI	100		1SDA054507R1	1SDA054515R1
PR222DS/P-LSIG	100		1SDA054508R1	1SDA054516R1
PR221DS-LS/I	250		1SDA054509R1	1SDA054517R1
PR221DS-I	250		1SDA054510R1	1SDA054518R1
PR222DS/P-LSI	250		1SDA054511R1	1SDA054519R1
PR222DS/P-LSIG	250		1SDA054512R1	1SDA054520R1
Ekip M-LRIU	100		1SDA063434R1	
Ekip M-LRIU	160		1SDA063435R1	
Ekip M-LRIU	200		1SDA063436R1	

Extracode to receive the circuit breaker with terminal F: 1SDA064111R1
Extracode to receive the circuit breaker with upper EF terminals: 1SDA065722R1

T4 250 – FIXED (F) – 4 POLES - FRONT TERMINALS FOR COPPER CABLES (FC CU)

Electronic trip unit	In	Icu (1000 V AC) Icu (1150 V AC)	L (12 kA)	V (20 kA - 12 kA)
PR221DS-LS/I	100		1SDA063418R1	1SDA063426R1
PR221DS-I	100		1SDA063419R1	1SDA063427R1
PR222DS/P-LSI	100		1SDA063420R1	1SDA063428R1
PR222DS/P-LSIG	100		1SDA063421R1	1SDA063429R1
PR221DS-LS/I	250		1SDA063422R1	1SDA063430R1
PR221DS-I	250		1SDA063423R1	1SDA063431R1
PR222DS/P-LSI	250		1SDA063424R1	1SDA063432R1
PR222DS/P-LSIG	250		1SDA063425R1	1SDA063433R1

Extracode to receive the circuit breaker with terminal F: 1SDA064111R1
Extracode to receive the circuit breaker with upper EF terminals: 1SDA065722R1

T4 250 – FIXED (F) – 3 POLES - FRONT TERMINALS FOR COPPER CABLES (FC CU)

Thermomagnetic trip unit - TMD and TMA	In	I_3	Icu (1000 V AC) Icu (1150 V AC)	V (20 kA - 12 kA)
	32	320		1SDA063410R1
	50	500		1SDA063411R1
	80	400...800		1SDA063412R1
	100	500...1000		1SDA063413R1
	125	625...1250		1SDA063414R1
	160	800...1600		1SDA063415R1
	200	1000...2000		1SDA063416R1
	250	1250...2500		1SDA063417R1

Extracode to receive the circuit breaker with terminal F: 1SDA064111R1
Extracode to receive the circuit breaker with upper EF terminals: 1SDA065722R1

T4 250 – FIXED (F) – 4 POLES - FRONT TERMINALS FOR COPPER CABLES (FC CU)

Thermomagnetic trip unit - TMD and TMA	In	I_3	Icu (1000 V AC) Icu (1150 V AC) Icu (1000 V DC)	V (20 kA - 12 kA - 40 kA)
	32	320		1SDA054497R1
	50	500		1SDA054498R1
	80	400...800		1SDA054499R1
	100	500...1000		1SDA054500R1
	125	625...1250		1SDA054501R1
	160	800...1600		1SDA054502R1
	200	1000...2000		1SDA054503R1
	250	1250...2500		1SDA054504R1

Extracode to receive the circuit breaker with terminal F: 1SDA064111R1
Extracode to receive the circuit breaker with upper EF terminals: 1SDA065722R1

T4 250 – FIXED (F) – 4 POLES - FRONT TERMINALS FOR USE AT 1000V DC WITH JUMPERS*

Thermomagnetic trip unit - TMD and TMA	In	I_3	Icu (1000 V DC)	V (20 kA)
	80	400...800		1SDA082616R1
	100	500...1000		1SDA082617R1
	125	625...1250		1SDA082618R1
	160	800...1600		1SDA082619R1
	200	1000...2000		1SDA082620R1
	250	1250...2500		1SDA082621R1

(*) Jumpers are not supplied with CB. Order also the code 1SDA082627R1

Circuit Breakers Tmax T for AC application up to 1150V AC - DC applications up to 1000V DC

T5 400 – FIXED (F) – 3 POLES - FRONT TERMINALS FOR COPPER CABLES (FC CU)

Electronic trip unit	In	Icu (1000 V AC) Icu (1150 V AC)	L (12 kA)	V (20 kA - 12 kA)
PR221DS-LS/I	320		1SDA063477R1	1SDA063485R1
PR221DS-I	320		1SDA063478R1	1SDA063486R1
PR222DS/P-LSI	320		1SDA063479R1	1SDA063487R1
PR222DS/P-LSIG	320		1SDA063480R1	1SDA063488R1
PR221DS-LS/I	400		1SDA054535R1	1SDA054539R1
PR221DS-I	400		1SDA054536R1	1SDA054540R1
PR222DS/P-LSI	400		1SDA054537R1	1SDA054541R1
PR222DS/P-LSIG	400		1SDA054538R1	1SDA054542R1
Ekip M-LRIU	320		1SDA063456R1	
Ekip M-LRIU	400		1SDA063457R1	

Extracode to receive the circuit breaker with terminal F: 1SDA064111R1
Extracode to receive the circuit breaker with upper EF terminals: 1SDA065722R1

T5 400 – FIXED (F) – 4 POLES - FRONT TERMINALS FOR COPPER CABLES (FC CU)

Electronic trip unit	In	Icu (1000 V AC) Icu (1150 V AC)	L (12 kA)	V (20 kA - 12 kA)
PR221DS-LS/I	320		1SDA063481R1	1SDA063489R1
PR221DS-I	320		1SDA063482R1	1SDA063490R1
PR222DS/P-LSI	320		1SDA063483R1	1SDA063491R1
PR222DS/P-LSIG	320		1SDA063484R1	1SDA063492R1
PR221DS-LS/I	400		1SDA063440R1	1SDA063444R1
PR221DS-I	400		1SDA063441R1	1SDA063445R1
PR222DS/P-LSI	400		1SDA063442R1	1SDA063446R1
PR222DS/P-LSIG	400		1SDA063443R1	1SDA063447R1

Extracode to receive the circuit breaker with terminal F: 1SDA064111R1
Extracode to receive the circuit breaker with upper EF terminals: 1SDA065722R1

T5 400 – FIXED (F) – 3 POLES - FRONT TERMINALS FOR COPPER CABLES (FC CU)

Thermomagnetic trip unit - TMA	In	I_3	Icu (1000 V AC) Icu (1150 V AC)	V (20 kA - 12 kA)
	320	1600...3200		1SDA063437R1
	400	2000...4000		1SDA063438R1

T5 400 – FIXED (F) – 4 POLES - FRONT TERMINALS FOR COPPER CABLES (FC CU)

Thermomagnetic trip unit - TMA	In	I_3	Icu (1000 V AC) Icu (1150 V AC) Icu (1000 V DC)	V (20 kA - 12 kA - 40 kA)
	320	1600...3200		1SDA054531R1
	400	2000...4000		1SDA054532R1

Extracode to receive the circuit breaker with terminal F: 1SDA064111R1; Extracode to receive the circuit breaker with upper EF terminals: 1SDA065722R1

T5 400 – FIXED (F) – 4 POLES - FRONT TERMINALS FOR USE AT 1000V DC WITH JUMPERS*

Thermomagnetic trip unit - TMA	In	I_3	Icu (1000 V DC)	V (20 kA)
	320	1600...3200		1SDA082622R1
	400	2000...4000		1SDA082623R1

(*) Jumpers are not supplied with CB. Order also the code 1SDA082628R1

T5 630 – FIXED (F) – 3 POLES - FRONT TERMINALS FOR COPPER CABLES (FC CU)

Electronic trip unit	In	Icu (1000 V AC) Icu (1150 V AC)	L (12 kA)	V (20 kA - 12 kA)
PR221DS-LS/I	630		1SDA054543R1	1SDA054547R1
PR221DS-I	630		1SDA054544R1	1SDA054548R1
PR222DS/P-LSI	630		1SDA054545R1	1SDA054549R1
PR222DS/P-LSIG	630		1SDA054546R1	1SDA054550R1

Extracode to receive the circuit breaker with terminal F: 1SDA064111R1
Extracode to receive the circuit breaker with upper EF terminals: 1SDA065722R1

T5 630 – FIXED (F) – 4 POLES - FRONT TERMINALS FOR COPPER CABLES (FC CU)

Electronic trip unit	In	Icu (1000 V AC) Icu (1150 V AC)	L (12 kA)	V (20 kA - 12 kA)
PR221DS-LS/I	630		1SDA063448R1	1SDA063452R1
PR221DS-I	630		1SDA063449R1	1SDA063453R1
PR222DS/P-LSI	630		1SDA063450R1	1SDA063454R1
PR222DS/P-LSIG	630		1SDA063451R1	1SDA063455R1

Extracode to receive the circuit breaker with terminal F: 1SDA064111R1
Extracode to receive the circuit breaker with upper EF terminals: 1SDA065722R1

T5 630 – FIXED (F) – 3 POLES - FRONT TERMINALS FOR COPPER CABLES (FC CU)

Thermomagnetic trip unit - TMA	In	I_3	Icu (1000 V AC) Icu (1150 V AC)	V (20 kA - 12 kA)
	500	2500...5000		1SDA063439R1

Extracode to receive the circuit breaker with terminal F: 1SDA064111R1
Extracode to receive the circuit breaker with upper EF terminals: 1SDA065722R1

T5 630 – FIXED (F) – 4 POLES - FRONT TERMINALS FOR COPPER CABLES (FC CU)

Thermomagnetic trip unit - TMA	In	I_3	Icu (1000 V AC) Icu (1150 V AC) Icu (1000 V DC)	V (20 kA - 12 kA - 40 kA)
	500	2500...5000		1SDA054533R1

Extracode to receive the circuit breaker with terminal F: 1SDA064111R1
Extracode to receive the circuit breaker with upper EF terminals: 1SDA065722R1

T5 630 – FIXED (F) – 4 POLES - FRONT TERMINALS FOR USE AT 1000V DC WITH JUMPERS*

Thermomagnetic trip unit - TMA	In	I_3	Icu (1000 V DC)	V (20 kA)
	500	2500...5000		1SDA082624R1

(*) Jumpers are not supplied with CB. Order also the code 1SDA082628R1

T6 630 – FIXED (F) – 3 POLES - FRONT TERMINALS (F)

Electronic trip unit	In	Icu (1000 V AC)	L (12 kA)
PR221DS-LS/I	630		1SDA060319R1
PR221DS-I	630		1SDA060320R1
PR222DS/P-LSI	630		1SDA060321R1
PR222DS/P-LSIG	630		1SDA060322R1

T6 630 – FIXED (F) – 4 POLES - FRONT TERMINALS (F)

Thermomagnetic trip unit - TMA	In	I_3	Icu (1000 V AC) Icu (1000 V DC)	L (12 kA - 40 kA)
	630	3150...6300		1SDA060315R1

T6 800 – FIXED (F) – 3 POLES - FRONT TERMINALS (F)

Electronic trip unit	In	Icu (1000 V AC)	L (12 kA)
PR221DS-LS/I	800		1SDA060323R1
PR221DS-I	800		1SDA060324R1
PR222DS/P-LSI	800		1SDA060325R1
PR222DS/P-LSIG	800		1SDA060326R1

T6 800 – FIXED (F) – 4 POLES - FRONT TERMINALS (F)

Thermomagnetic trip unit - TMA	In	I3	Icu (1000 V AC) Icu (1000 V DC)	L (12 kA - 40 kA)
	800	4000...8000		1SDA060317R1

T6 800 – FIXED (F) – 4 POLES - FRONT TERMINALS FOR USE AT 1000V DC WITH JUMPERS*

Thermomagnetic trip unit - TMA	In	I_3	Icu (1000 V DC)	L (20 kA)
	630	3150...6300		1SDA082625R1
	800	4000...8000		1SDA082626R1

(*) Jumpers are not supplied with CB. Order also the code 1SDA082630R1

Fixed parts, conversion kit and accessories for fixed parts

Fixed parts for T4 250 - T5 400 circuit-breakers at 1000 V AC

FC Cu = Front terminals for copper cables	3 poles	4 poles
T4 250 P FP 1000 V AC	1SDA063458R1	1SDA063459R1
T5 400 P FP 1000 V AC	1SDA063462R1	1SDA063463R1

Withdrawable (W) – Fixed part

EF = Front extended terminals	3 poles	4 poles
T4 W FP EF	1SDA054743R1	1SDA054746R1
T5 400 W FP EF	1SDA054755R1	1SDA054758R1
T5 630 W FP EF(1)	1SDA054768R1	1SDA054771R1
T6 630/800 W FP EF	1SDA060384R1	1SDA060387R1
T7-T7M W FP EF	1SDA062045R1	1SDA062049R1

(1) For the circuit-breakers and the switch-disconnectors in plug-in version In max = 570 A

VR = Rear flat vertical terminals	3 poles	4 poles
T4 W FP VR	1SDA054744R1	1SDA054747R1
T5 400 W FP VR	1SDA054756R1	1SDA054759R1
T5 630 W FP VR(1)	1SDA054769R1	1SDA054772R1
T6 630/800 W FP VR	1SDA060386R1	1SDA060389R1

(1) For the circuit-breakers and the switch-disconnectors in plug-in version In max = 570 A

HR = Rear flat horizontal terminals	3 poles	4 poles
T4 W FP HR	1SDA054745R1	1SDA054748R1
T5 400 W FP HR	1SDA054757R1	1SDA054761R1
T5 630 W FP HR(1)	1SDA054770R1	1SDA054774R1
T6 630/800 W FP HR	1SDA060385R1	1SDA060388R1

(1) For the circuit-breakers and the switch-disconnectors in plug-in version In max = 570 A

HR/VR = Rear flat terminals	3 poles	4 poles
T7-T7M W FP HR	1SDA062044R1	1SDA062048R1

Nota: Fixed parts of T7-T7M circuit-breaker with rear terminals are supplied as standard with terminals mounted horizontally. To order the terminals mounted vertically, the extra code 1SDA063571R1 must be specified.

Fixed parts for T4 250 - T5 400 circuit-breakers at 1000 V AC

FC Cu = Front terminals for copper cables	3 poles	4 poles
T4 250 W FP 1000 V AC	1SDA063460R1	1SDA063461R1
T5 400 W FP 1000 V AC	1SDA063464R1	1SDA063465R1

Conversion of the version

CONVERSION KIT FROM FIXED INTO MOVING PART OF PLUG-IN T4...T5

Type	3 poles	4 poles
Kit P MP T4	1SDA054839R1	1SDA054840R1
Kit P MP T5 400	1SDA054843R1	1SDA054844R1
Kit P MP T5 630(1)	1SDA054847R1	1SDA054848R1

Note: The plug-in version must be composed as follows
a) Fixed circuit-breaker
b) Conversion kit from fixed into moving part of plug-in
c) Fixed part of plug-in
(1) For the circuit-breakers and switch-disconnectors in plug-in version In max = 570 A

CONVERSION KIT FROM FIXED INTO MOVING PART OF WITHDRAWABLE T4...T7

Type	3 poles	4 poles
Kit W MP T4	1SDA054841R1	1SDA054842R1
Kit W MP T5 400	1SDA054845R1	1SDA054846R1
Kit W MP T5 630(1)	1SDA054849R1	1SDA054850R1
Kit W MP T6 630/800	1SDA060390R1	1SDA060391R1
Kit W MP T7-T7M	1SDA062162R1	1SDA062163R1

Note: The withdrawable version must be composed as follows
a) Fixed circuit-breaker
b) Conversion kit from fixed into moving part of withdrawable circuit-breaker
c) Fixed part of withdrawable circuit-breaker
d) Front for lever operating mechanism or rotary handle or motor operator (only for T4, T5 and T6)
e) Sliding contact blocks if the circuit-breaker is automatic or fitted with electrical accessories (only for T7)
(1) For the circuit-breaker and switch-disconnector in withdrawable version In max = 570 A

SLIDING CONTACTS BLOCKS FOR T7

Type	
Lef block - MP T7 - T7M	1SDA062164R1
Central block - MP T7 - T7M	1SDA062165R1
Right block - MP T7 - T7M	1SDA062166R1
Left block - FP T7	1SDA063572R1
Left block - FP T7M	1SDA062167R1
Central block - FP T7 - T7M	1SDA062168R1
Right block - FP T7 - T7M	1SDA062169R1

Note: The moving part of a circuit-breaker fitted with electrical accessories or PR331/P and PR332/P electronic trip units is supplied as standard with blocks for the connection (see Accessories section), while blocks for the fixed part must always be ordered.

CONVERSION KIT FROM PLUG-IN INTO WITHDRAWABLE FOR RC222 AND RC223

Type	4 poles
Kit W MP RC T4-T5	1SDA055366R1

CONVERSION KIT FROM FIXED PART OF PLUG-IN INTO FIXED PART OF WITHDRAWABLE CIRCUIT-BREAKER

Type	4 poles
Kit FP P in FP W T4	1SDA054854R1
Kit FP P in FP W T5	1SDA054855R1

Fixed parts, conversion kit and accessories for fixed parts

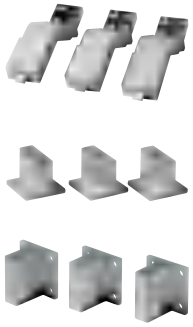

TERMINALS FOR FIXED PARTS T4...T7

Type	3 pieces	4 pieces
Front extended terminals - EF		
EF T4	1SDA066119R1	1SDA066120R1
EF T5 400	1SDA066123R1	1SDA066124R1
EF T5 630	1SDA066127R1	1SDA066128R1
EF T6	1SDA013984R1	1SDA013985R1
EF T7-T7M	1SDA062171R1	1SDA062172R1
Front extended spread terminals - ES		
ES T5 (630 A)	1SDA055271R1	1SDA055272R1
ES T7-T7M	1SDA065620R1	1SDA065621R1
Front terminals for copper cables - FC Cu		
FC Cu T4 1x185 mm²	1SDA054831R1	1SDA054832R1
FC Cu T5 1x240 mm²	1SDA054833R1	1SDA054834R1
Front terminals for copper-aluminium cables - FC CuAl		
FC CuAl T4 1x185 mm²	1SDA054835R1	1SDA054836R1
FC CuAl T5 1x240 mm²	1SDA054837R1	1SDA054838R1
Rear flat vertical terminals - VR		
VR T5 630	1SDA066131R1	1SDA066132R1
VR T6	1SDA013988R1	1SDA013989R1
Rear flat horizontal terminals - HR		
HR T5 630	1SDA066129R1	1SDA066130R1
HR T6	1SDA013986R1	1SDA013987R1
Rear flat terminals - HR/VR		
HR/VR T4	1SDA066121R1	1SDA066122R1
HR/VR T5 400	1SDA066125R1	1SDA066126R1
HR/VR T7-T7M	1SDA063089R1	1SDA063090R1
Rear spread terminals - RS		
RS T7-T7M	1SDA063577R1	1SDA063578R1

Note: The FC Cu and FC CuAl terminals are supplied with insulating terminal covers for TC-FP fixed parts.

LOCK FOR FIXED PART OF WITHDRAWABLE CIRCUIT-BREAKER

Type	T4-T5-T6
KLF-D FP - Different key for each circuit-breaker	1SDA055230R1
KLF-S FP - Same key for different groups of circuit-breakers	1SDA055231R1
PLL FP - Lock padlocks	1SDA055232R1
KLF-D Ronis FP - Lock type Ronis	1SDA055233R1

CACHE-BORNES ISOLANTS POUR PARTIES FIXES - TC-FP

Type	3 poles	4 poles
TC-FP T4	1SDA054857R1	1SDA054858R1
TC-FP T5	1SDA054859R1	1SDA054861R1

Accessories

Service releases

T4 - T5 - T6

T7

SHUNT OPENING RELEASE - SOR

Type	T4-T5-T6	T7-T7M
uncabled version		
SOR 12 V DC	1SDA054862R1	
SOR 24 V AC / DC		1SDA062065R1
SOR 24...30 V AC / DC	1SDA054863R1	
SOR 30 V AC / DC		1SDA062066R1
SOR 48 V AC / DC		1SDA062067R1
SOR 48...60 V AC / DC	1SDA054864R1	
SOR 60 V AC / DC		1SDA062068R1
SOR 110...120 V AC / DC		1SDA062069R1
SOR 110...127 V AC - 110...125 V DC	1SDA054865R1	
SOR 120...127 V AC / DC		1SDA063547R1
SOR 220...240 V AC / DC		1SDA063548R1
SOR 220...240 V AC - 220...250 V DC	1SDA054866R1	
SOR 240...250 V AC / DC		1SDA062070R1
SOR 380...400 V AC		1SDA062071R1
SOR 380...440 V AC	1SDA054867R1	
SOR 415...440 V AC		1SDA062072R1
SOR 480...525 V AC	1SDA054868R1	
cabled version(1)		
SOR-C 12 V DC	1SDA054869R1	
SOR-C 24...30 V AC / DC	1SDA054870R1	
SOR-C 48...60 V AC / DC	1SDA054871R1	
SOR-C 110...127 V AC - 110...125 V DC	1SDA054872R1	
SOR-C 220...240 V AC - 220...250 V DC	1SDA054873R1	
SOR-C 380...440 V AC	1SDA054874R1	
SOR-C 480...525 V AC	1SDA054875R1	

Note: For T7-T7M in withdrawable version, sliding contact blocks for fixed and moving part are necessary. See page 3/5 and 7/37.
(1) Compulsory with T4-T5-T6 in the withdrawable or motorized versions.

SOR TEST UNIT

Type	
T7-T7M	1SDA082751R1

SHUNT CLOSING RELEASE - SCR

Type	T7M
cabled version	
SCR 24 V AC / DC	1SDA062076R1
SCR 30 V AC / DC	1SDA062077R1
SCR 48 V AC / DC	1SDA062078R1
SCR 60 V AC / DC	1SDA062079R1
SCR 110...120 V AC / DC	1SDA062080R1
SCR 120...127 V AC / DC	1SDA063549R1
SCR 220...240 V AC / DC	1SDA063550R1
SCR 240...250 V AC / DC	1SDA062081R1
SCR 380...400 V AC	1SDA062082R1
SCR 415...440 V AC	1SDA062083R1

Note: For T7-T7M in withdrawable version, sliding contact blocks for fixed and moving part are necessary. See page 3/5 and 7/37.

Accessories

T4 - T5 - T6

T7

UNDERVOLTAGE RELEASE - UVR

Type	T4-T5-T6	T7-T7M
uncabled version		
UVR 24 V AC / DC		1SDA062087R1
UVR 24...30 V AC / DC	1SDA054880R1	
UVR 30 V AC / DC		1SDA062088R1
UVR 48 V AC / DC	1SDA054881R1	1SDA062089R1
UVR 60 V AC/DC	1SDA054882R1	1SDA062090R1
UVR 110...120 V AC / DC		1SDA062091R1
UVR 110...127 V AC – 110...125 V DC	1SDA054883R1	
UVR 120...127 V AC / DC		1SDA063551R1
UVR 220...240 V AC / DC		1SDA063552R1
UVR 220...240 V AC - 220...250 V DC	1SDA054884R1	
UVR 240...250 V AC / DC		1SDA062092R1
UVR 380...400 V AC		1SDA062093R1
UVR 380...440 V AC	1SDA054885R1	
UVR 415...440 V AC		1SDA062094R1
UVR 480...525 V AC	1SDA054886R1	
cabled version(1)		
UVR-C 24...30 V AC / DC	1SDA054887R1	
UVR-C 48 V AC / DC	1SDA054888R1	
UVR-C 60 V AC/DC	1SDA054889R1	
UVR-C 110...127 V AC - 110...125 V DC	1SDA054890R1	
UVR-C 220...240 V AC - 220...250 V DC	1SDA054891R1	
UVR-C 380...440 V AC	1SDA054892R1	
UVR-C 480...525 V AC	1SDA054893R1	

Note: For T7-T7M in withdrawable version, sliding contact blocks for fixed and moving part are necessary. See page 3/5 and 7/37.
(1) Compulsory with T4-T5-T6 in the withdrawable or motorized versions.

SHUNT OPENING RELEASE WITH PERMANENT OPERATION - PS-SOR

Type	T4-T5-T6
uncabled version	
PS-SOR 24 V AC/DC	1SDA054876R1
PS-SOR 110...120 V AC	1SDA054877R1
cabled version	
PS-SOR-C 24 V AC/DC	1SDA054878R1
PS-SOR-C 110...120 V AC	1SDA054879R1

CONNECTORS AND SOCKET-PLUGS FOR ELECTRICAL ACCESSORIES

Type	T4-T5-T6
Socket-plug 12 poles	1SDA051362R1
Socket-plug 6 poles	1SDA051363R1
Socket-plug 3 poles	1SDA051364R1
3-way connector for second SOR-C	1SDA055273R1

TIME DELAY DEVICE FOR UNDERVOLTAGE RELEASE - UVD

Type	T4...T6	T7-T7M
UVD 24...30 V AC / DC	1SDA051357R1	1SDA038316R1
UVD 48 V AC / DC		1SDA038317R1
UVD 48...60 V AC / DC	1SDA051358R1	
UVD 60 V AC / DC		1SDA038318R1
UVD 110...125 V AC / DC	1SDA051360R1	1SDA038319R1
UVD 220...250 V AC / DC	1SDA051361R1	1SDA038320R1

Electrical signals

T1 - T2 - T3

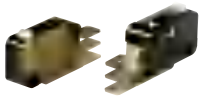

T7

AUXILIARY CONTACTS - AUX

Type	T4-T5-T6	T7	T7M
uncabled version			
AUX 1Q 1SY 250 V AC/DC	1SDA051368R1		
AUX 3Q 1SY 250 V AC/DC	1SDA051369R1		
AUX 1Q 1SY 400 V AC		1SDA062104R1	
AUX 2Q 400 V AC		1SDA062102R1	1SDA062102R1
AUX 1Q 1SY 24 V DC	1SDA068797R1	1SDA062103R1	
AUX 3Q 1SY 24 V DC	1SDA054914R1		
AUX 2Q 24 V DC		1SDA062101R1	1SDA062101R1
cabled version with 1 m long cables			
AUX-C 1Q 1SY 250 V AC/DC	1SDA054910R1		
AUX-C 3Q 1SY 250 V AC/DC	1SDA054911R1		
AUX-C 1Q 1SY 400 V AC	1SDA054912R1		
AUX-C 2Q 400 V AC	1SDA054913R1		
AUX-C 1Q 1SY 24 V DC	1SDA066075R1		
AUX-C 3Q 1SY 24 V DC	1SDA054915R1		
cabled contact for signalling trip coil release trip			
AUX-SA 1 S51 T4-T5 NO	1SDA055050R1		
AUX-SA 1 S51 T4-T5 NC	1SDA064518R1		
AUX-SA 1 S51 T6(1)	1SDA060393R1		
AUX-SA 1 S51 T7-T7M 24 V		1SDA066099R1	1SDA066100R1
AUX-SA 1 S51 T7-T7M 250 V		1SDA062105R1	1SDA063553R1
cabled contact for signalling manual/remote operation			
AUX-MO-C(2)	1SDA054917R1		
cabled contact circuit breaker ready to close			
AUX-RTC 24 V DC			1SDA062108R1
AUX-RTC 250 V AC/DC			1SDA062109R1
cabled contact signalling spring charged			
AUX-MC 24 V DC			1SDA062106R1
AUX-MC 250 V AC/DC			1SDA062107R1
cabled contacts in electronic version			
AUX-E-C 1Q 1SY T4-T5(3)	1SDA054916R1		
AUX-E-C 1Q 1SY T6(3)	1SDA064161R1		

Note: For T7-T7M in withdrawable version, sliding contact blocks for fixed and moving part are necessary. See page 3/5 and 7/37.
(1) Available only mounted on the circuit-breaker.
(2) For T4, T5 and T6 in plug-in/withdrawable version, it is necessary to order a socket plug connector 3 poles 1SDA051364R1
(3) Only with circuit-breakers equipped with PR222DS/PD, PR223DS and Ekip E-LSIG trip units.

Accessories

AUXILIARY POSITION CONTACTS - AUP

Type	T4-T5-T6	T7-T7M
AUP-I T4-T5 24 V DC - 1 contact signalling circuit-breakers racked-in	1SDA054920R1	
AUP-I T4-T5 400 V AC/DC - 1 contact for signalling circuit-breakers racked-in	1SDA054918R1	
AUP-R T4-T5 24 V DC - 1 contact for signalling circuit-breakers racked-out	1SDA054921R1	
AUP-R T4-T5 400 V AC/DC - 1 contact for signalling circuit-breakers racked-out	1SDA054919R1	
AUP T7-T7M 24 V DC		1SDA062110R1
AUP T7-T7M 250 V AC		1SDA062111R1

Note: For T4-T5-T6 in plug-in version, contacts signaling circuit-breaker racked-in. For T4-T5-T6 in withdrawable version, contacts signaling circuit-breaker racked-in/racked-out.

EARLY AUXILIARY CONTACTS - AUE

Type	T4-T5	T6	T7
AUE - early contacts	1SDA054925R1	1SDA060394R1	1SDA062112R1

Note: On T7, the anticipated auxiliary contacts (AUE) can only be ordered already installed on the circuit-breaker.
For T7 in withdrawable version, sliding contact blocks for fixed and moving part are necessary. See page 3/5 and 7/37.

ADAPTERS - ADP

Type	T4-T5-T6
ADP - Adapters 5pin	1SDA055173R1
ADP - Adapters 6pin	1SDA054922R1
ADP - Adapters 12pin	1SDA054923R1
ADP - Adapters 10pin	1SDA054924R1

TESTING EXTENSION

Type	T4-T5-T6
5pin checking extension for blanck tests on T4-T5-T6 P/W service releases	1SDA055351R1
6pin checking extension for blanck tests on T4-T5-T6 P/W auxiliary contacts (1+1) service and residual current releases	1SDA055063R1
12pin checking extension for blanck tests on T4-T5-T6 P/W auxiliary contacts (3+1)	1SDA055064R1
10pin checking extension for blanck tests on T4-T5-T6 P/W motor operator and early contacts	1SDA055065R1

TRIP RESET

Type	T7M
Trip reset 24-30 V AC/DC	1SDA063554R1
Trip reset 110-130 V AC/DC	1SDA062118R1
Trip reset 200-240 V AC/DC	1SDA062119R1

Note: For T7-T7M in withdrawable version, sliding contact blocks for fixed and moving part are necessary. See page 3/5 and 7/37.

Mechanical signals

MECHANICAL OPERATION COUNTER

Type	T7M
Mechanical operation counter	1SDA062160R1

STORED ENERGY MOTOR OPERATOR - MOE

Type	T4-T5	T6
MOE 24 V DC	1SDA054894R1	1SDA060395R1
MOE 48...60 V DC	1SDA054895R1	1SDA060396R1
MOE 110...125 V AC/DC	1SDA054896R1	1SDA060397R1
MOE 220...250 V AC/DC	1SDA054897R1	1SDA060398R1
MOE 380 V AC	1SDA054898R1	1SDA060399R1

STORED ENERGY MOTOR OPERATOR WITH ELECTRONICS - MOE-E

Type	T4-T5	T6
MOE-E 24 V DC	1SDA054899R1	1SDA060400R1
MOE-E 48...60 V DC	1SDA054900R1	1SDA060401R1
MOE-E 110...125 V AC/DC	1SDA054901R1	1SDA060402R1
MOE-E 220...250 V AC/DC	1SDA054902R1	1SDA060403R1
MOE-E 380 V AC	1SDA054903R1	1SDA060404R1

Note: Always supplyed complete with the AUX-E-C electronic auxiliary contact.

SPRING CHARGING MOTOR

Type	T7M
Spring charging motor 24...30 V AC/DC	1SDA062113R1
Spring charging motor 48...60 V AC/DC	1SDA062114R1
Spring charging motor 100...130 V AC/DC	1SDA062115R1
Spring charging motor 220...250 V AC/DC	1SDA062116R1
Spring charging motor 380...415 V AC	1SDA062117R1

Note: For T7-T7M in withdrawable version, sliding contact blocks for fixed and moving part are necessary. See page 3/5 and 7/37.

Accessories

Rotary handle operating mechanism

DIRECT- RHD

Type	T4-T5	T6	T7
RHD normal for fixed and plug-in version	1SDA054926R1	1SDA060405R1	1SDA062120R1
RHD_EM emergency for fixed and plug-in version	1SDA054927R1	1SDA060406R1	1SDA062121R1
RHD normal for withdrawable version	1SDA054928R1	1SDA060407R1	1SDA062120R1
RHD_EM di emergency for withdrawable version	1SDA055234R1	1SDA060408R1	1SDA062121R1

TRANSMITTED - RHE

Type	T4-T5	T6	T7
RHE normal for fixed and plug-in version	1SDA054929R1	1SDA060409R1	1SDA062122R1
RHE normal with self-centering base for fixed and plug-in version	1SDA069395R1		
RHE normal with self-centering base for withdrawable version	1SDA069396R1		
RHE_EM emergency for fixed and plug-in version	1SDA054930R1	1SDA060410R1	1SDA062123R1
RHE normal for withdrawable version	1SDA054933R1	1SDA060411R1	1SDA062122R1
RHE_EM di emergency for withdrawable version	1SDA054934R1	1SDA060412R1	1SDA062123R1
Individual components			
RHE_B just base for RHE for fixed and plug-in version	1SDA054931R1	1SDA060413R1	1SDA062124R1
RHE_B just base for RHE withdrawable version	1SDA054935R1	1SDA060414R1	1SDA062124R1
RHE_S just rod 500 mm for RHE	1SDA054932R1	1SDA054932R1	1SDA064104R1
RHE_H just handle for RHE	1SDA054936R1	1SDA060415R1	1SDA062125R1
RHE_H_EM just emergency handle for RHE	1SDA054937R1	1SDA060416R1	1SDA062126R1

IP54 PROTECTION FOR ROTARY HANDLE

Type	T4-T5-T6	T7
RHE_IP54 protection kit IP54	1SDA054938R1	1SDA054938R1

Operating mechanism and locks

PADLOCK LEVER LOCK - PLL

Type	T7	T7M
PLL - padlock in open position	1SDA062150R1	1SDA069656R1

Note: On T7, the padlock is an alternative to the key lock.

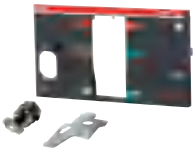

KEY LOCK IN OPEN POSITION ON THE CIRCUIT-BREAKER - KLC

Type	T7	T7M
KLC-D - different key	1SDA062134R1	1SDA062141R1
KLC-S - same key for different groups of circuit-breakers (N. 20005)	1SDA062135R1	1SDA062142R1
KLC-S - same key for different groups of circuit-breakers (N. 20006)	1SDA062136R1	1SDA062143R1
KLC-S - same key for different groups of circuit-breakers (N. 20007)	1SDA062137R1	1SDA062144R1
KLC-S - same key for different groups of circuit-breakers (N. 20008)	1SDA062138R1	1SDA062145R1
KLC-R - arrangement for Ronis key lock	1SDA062139R1	1SDA062146R1
KLC-P - arrangement for Profalux key lock	1SDA062140R1	1SDA062146R1

KEY LOCK FOR FRONT/ROTARY HANDLE - KLF

Type	T4-T5	T6	T7
KLF-D - different key	1SDA054939R1	1SDA060658R1	1SDA063555R1
KLF-S - same key for different groups of circuit-breakers (N. 20005)	1SDA054940R1	1SDA060659R1	1SDA063556R1
KLF-S - same key for different groups of circuit-breakers (N. 20006)	1SDA054941R1	1SDA060660R1	1SDA063557R1
KLF-S - same key for different groups of circuit-breakers (N. 20007)	1SDA054942R1	1SDA060661R1	1SDA063558R1
KLF-S - same key for different groups of circuit-breakers (N. 20008)	1SDA054943R1	1SDA060662R1	1SDA063559R1
KLF-S - arrangement for Ronis key lock			1SDA063560R1
KLF-S - arrangement for Profalux key lock			1SDA063561R1

KEY LOCK FOR MOTOR OPERATOR - MOL

Type	T4-T5	T6
MOL-D different key	1SDA054904R1	1SDA060611R1
MOL-S - same key for different groups of circuit-breakers (N. 20005)	1SDA054905R1	1SDA060612R1
MOL-S - same key for different groups of circuit-breakers (N. 20006)	1SDA054906R1	1SDA060613R1
MOL-S - same key for different groups of circuit-breakers (N. 20007)	1SDA054907R1	1SDA060614R1
MOL-S - same key for different groups of circuit-breakers (N. 20008)	1SDA054908R1	1SDA060615R1
MOL-M - lock only on manual operation with same key	1SDA054909R1	1SDA054909R1

Accessories

KEY LOCK IN RACKED-IN/TEST ISOLATED/RACKED-OUT POSITION

Type	T7-T7M
For 1 circuit-breaker - different key	1SDA062153R1
For groups of circuit-breakers - same key (N. 20005)	1SDA062154R1
For groups of circuit-breakers - same key (N. 20006)	1SDA062155R1
For groups of circuit-breakers - same key (N. 20007)	1SDA062156R1
For groups of circuit-breakers - same key (N. 20008)	1SDA062157R1
Arrangement for Ronis key lock	1SDA063567R1
Arrangement for Profalux key lock	1SDA063570R1
Arrangement for Castell key lock	1SDA063568R1
Arrangement for Kirk key lock	1SDA063569R1

Note: The fixed part can be equipped with two different key locks.

ACCESSORY FOR LOCK IN RACKED-OUT POSITION

Type	T7-T7M
Lock in racked-out position	1SDA062158R1

Note: As optional in addition to the circuit-breaker lock in racked-in/isolated-test/racked-out position.

MECHANICAL COMPARTMENT DOOR LOCK

Type	T7	T7M
Mechanical compartment door lock with cables for T7-T7M[1]	1SDA062159R1	1SDA062159R1
Mechanical compartment door lock (fixing to wall) for T7M F		1SDA063722R1
Mechanical compartment door lock (fixing to floor) for T7M F		1SDA063723R1
Mechanical compartment door lock for T7-T7M W	1SDA063724R1	1SDA063724R1

Note: A circuit-breaker equipped with mechanical compartment door lock cannot be interlocked with another circuit-breaker.
[1] To be ordered with cables kit for interlock and plate for interlock consistent with the circuit-breaker.

FRONT LEVER OPERATING MECHANISM - FLD

Type	T4-T5	T6
FLD - for fixed and plug-in version	1SDA054944R1	1SDA060417R1
FLD - for withdrawable version	1SDA054945R1	1SDA060418R1

FLOOR FIXING PLATE

Type	T7-T7M
Floor fixing plate for fixed unit	1SDA063856R1

TRANSPARENT PROTECTION FOR BUTTONS

Type	T7-T7M
Transparent protection for buttons	1SDA062132R1
Transparent protection for buttons - independent	1SDA062133R1

IP54 DOOR PROTECTION

Type	T7-T7M
IP54 door protection	1SDA062161R1

IP44 TOGGLE PROTECTION

Type	T4-T5
IP44 protection	1SDA065809R1

Connections terminals

HIGH INSULATING TERMINAL COVERS - HTC

Type	3 poles	4 poles
HTC T4	1SDA054958R1	1SDA054959R1
HTC T5	1SDA054960R1	1SDA054961R1
HTC T6	1SDA014040R1	1SDA014041R1
HTC T7-T7M	1SDA063091R1	1SDA063092R1

PROTECTION IP40 FOR HIGH INSULATING TERMINAL COVERS - HTC-P

Type	3 poles	4 poles
HTC-P T4	1SDA054962R1	1SDA054963R1
HTC-P T5	1SDA054964R1	1SDA054965R1

LOW INSULATING TERMINAL COVERS - LTC

Type	3 poles	4 poles
LTC T4	1SDA054966R1	1SDA054967R1
LTC T5	1SDA054968R1	1SDA054969R1
LTC T6	1SDA014038R1	1SDA014039R1
LTC T7-T7M F	1SDA063093R1	1SDA063094R1

SEALABLE SCREWS FOR TERMINAL COVERS

Type	T4-T5	T6-T7-T7M
Sealable screws	1SDA051504R1	1SDA013699R1

SEPARATING PARTITIONS - PB

Type	T4-T5	T6	T7-T7M
PB100 low (H=100 mm) - 4 pieces - 3p	1SDA054970R1	1SDA050696R1	1SDA054970R1
PB100 low (H=100 mm) - 6 pieces - 4p	1SDA054971R1	1SDA050697R1	1SDA054971R1
PB200 high (H=200 mm) - 4 pieces - 3p	1SDA054972R1		1SDA054972R1
PB200 high (H=200 mm) - 6 pieces - 4p	1SDA054973R1		1SDA054973R1

Accessories

FRONT EXTENDED TERMINALS - EF

Type	3 pieces	4 pieces	6 pieces	8 pieces
EF T4	1SDA055000R1	1SDA055001R1	1SDA054998R1	1SDA054999R1
EF T5	1SDA055036R1	1SDA055037R1	1SDA055034R1	1SDA055035R1
EF T6 630	1SDA023379R1	1SDA023389R1	1SDA013920R1	1SDA013921R1
EF T6 800	1SDA023383R1	1SDA023393R1	1SDA013954R1	1SDA013955R1
EF T6 1000	1SDA064319R1	1SDA064320R1	1SDA064321R1	1SDA064322R1
EF T7-T7M	1SDA063103R1	1SDA063104R1	1SDA063105R1	1SDA063106R1

FRONT TERMINALS FOR COPPER-ALUMINIUM CABLES - FC CUAL

Type	3 pieces	4 pieces	6 pieces	8 pieces
FC CuAl T4 1x50 mm²	1SDA054984R1	1SDA054985R1	1SDA054982R1	1SDA054983R1
FC CuAl T4 2x150 mm² - external terminal	1SDA054992R1	1SDA054993R1	1SDA054990R1	1SDA054991R1
FC CuAl T4 1x185 mm²	1SDA054988R1	1SDA054989R1	1SDA054986R1	1SDA054987R1
FC CuAl T4 1x240 mm² - external terminal	1SDA064549R1	1SDA064550R1	1SDA064551R1	1SDA064552R1
FC CuAl T5 400 2x120 mm² - external terminal	1SDA055028R1	1SDA055029R1	1SDA055026R1	1SDA055027R1
FC CuAl T5 400 1x240 mm²	1SDA055020R1	1SDA055021R1	1SDA055018R1	1SDA055019R1
FC CuAl T5 400 1x300 mm²	1SDA055024R1	1SDA055025R1	1SDA055022R1	1SDA055023R1
FC CuAl T5 2x240 mm² - external terminal	1SDA055032R1	1SDA055033R1	1SDA055030R1	1SDA055031R1
FC CuAl T6 630 2x240 mm²	1SDA023380R1	1SDA023390R1	1SDA013922R1	1SDA013923R1
FC CuAl T6 800 3x185 mm² - external terminal	1SDA023384R1	1SDA023394R1	1SDA013956R1	1SDA013957R1
FC CuAl T6 1000 4x150 mm² - external terminal	1SDA060687R1	1SDA060688R1	1SDA060689R1	1SDA060690R1
FC CuAl T7 1250-T7M 630 2x240 mm² - external terminal	1SDA063865R1	1SDA063866R1	1SDA063867R1	1SDA063868R1
FC CuAl T7 1250-T7M 1250 4x240 mm² - external terminal	1SDA063112R1	1SDA063113R1	1SDA063114R1	1SDA063115R1

FRONT TERMINALS - F (1)

Type	3 pieces	4 pieces	6 pieces	8 pieces
F T4 - Plugs with screws	1SDA054976R1	1SDA054977R1	1SDA054974R1	1SDA054975R1
F T5 - Plugs with screws	1SDA055012R1	1SDA055013R1	1SDA055010R1	1SDA055011R1
F T6 630-800 - Plugs with screws	1SDA060421R1	1SDA060422R1	1SDA060423R1	1SDA060424R1
F T7-T7M - Plugs with screws	1SDA063099R1	1SDA063100R1	1SDA063101R1	1SDA063102R1

(1) To be requested as loose kit.

FRONT EXTENDED SPREAD TERMINALS - ES

Type	3 pieces	4 pieces	6 pieces	8 pieces
ES T4	1SDA055004R1	1SDA055005R1	1SDA055002R1	1SDA055003R1
ES T5	1SDA055040R1	1SDA055041R1	1SDA055038R1	1SDA055039R1
ES T6 (1/2 upper kit)	1SDA050692R1			
ES T6 (1/2 lower kit)	1SDA050704R1			
ES T6		1SDA050693R1	1SDA050688R1	1SDA050689R1
ES T7-T7M (1/2 upper kit)	1SDA063107R1			
ES T7-T7M (1/2 lower kit)	1SDA063108R1			
ES T7-T7M		1SDA063109R1	1SDA063110R1	1SDA063111R1

FRONT TERMINALS FOR COPPER CABLES - FC CU

Type	3 pieces	4 pieces	6 pieces	8 pieces
FC Cu T4 1x185 mm²	1SDA054980R1	1SDA054981R1	1SDA054978R1	1SDA054979R1
FC Cu T5 400 1x240 mm²	1SDA055016R1	1SDA055017R1	1SDA055014R1	1SDA055015R1
FC Cu T5 630 2x240 mm²	1SDA055364R1	1SDA055365R1	1SDA055362R1	1SDA055363R1

REAR TERMINALS FOR COPPER-ALUMINIUM CABLES - RC CUAL

Type	3 pieces	4 pieces	6 pieces	8 pieces
RC CuAl T6 630 2x240 mm²	1SDA023381R1	1SDA023391R1	1SDA013924R1	1SDA013925R1
RC CuAl T6 800 3x185 mm²	1SDA023385R1	1SDA023395R1	1SDA013958R1	1SDA013959R1

Note: For ordering methods, please ask ABB SACE.

FRONT MULTI-CABLE TERMINALS - MC

Type	3 pieces	4 pieces	6 pieces	8 pieces
MC CuAl T4 6x35 mm²	1SDA054996R1	1SDA054997R1	1SDA054994R1	1SDA054995R1
MC CuAl T5 6x50 mm²	1SDA064182R1	1SDA064183R1	1SDA064184R1	1SDA064185R1

REAR TERMINALS

Type	3 pieces	4 pieces	6 pieces	8 pieces
R T4	1SDA055008R1	1SDA055009R1	1SDA055006R1	1SDA055007R1
R T5	1SDA055044R1	1SDA055045R1	1SDA055042R1	1SDA055043R1
R T6	1SDA060425R1	1SDA060426R1	1SDA060427R1	1SDA060428R1
R T7	1SDA063116R1	1SDA063117R1	1SDA063118R1	1SDA063119R1

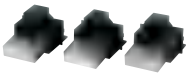

REAR FLAT HORIZONTAL TERMINALS - HR

Type	3 pieces	4 pieces	6 pieces	8 pieces
HR T7-T7M	1SDA063120R1	1SDA063121R1	1SDA063122R1	1SDA063123R1

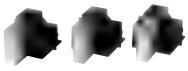

REAR FLAT VERTICAL TERMINALS - VR

Type	3 pieces	4 pieces	6 pieces	8 pieces
VR T7-T7M	1SDA063124R1	1SDA063125R1	1SDA063126R1	1SDA063127R1

KIT FOR TAKING UP VOLTAGE FOR AUXILIARES

Type	3 pieces	4 pieces
AuxV T4 FC Cu	1SDA055046R1	1SDA055047R1
AuxV T4-T5 F	1SDA055048R1	1SDA055049R1

Note: Only available for fixed version circuit-breaker.

JUMPERS KIT FOR CONNECTION OF POLES AT 1000V DC

Type	T4	T5	T6
Jumper kit 2+2 poles in series for 4p 1000V DC circuit-breakers	1SDA082627R1	1SDA082628R1	1SDA082630R1

Accessories

DIALOGUE UNIT PR222DS/PD

Type	T5-T6
LSI	1SDA055066R1
LSIG	1SDA055067R1
Ekip E-LSIG	1SDA081094R1 (1)

Note: To be specified only in addition to the code of the automatic circuit-breaker, with analogous overcurrent release (PR222DS/P).
To order the trip unit separately, see pag 7/35.
(1) available for T5 only

ACCESSORIES FOR ELECTRONIC RELEASES

Type	T4-T5-T6
X3 Connector for fixed circuit-breaker PR222DS, Ekip M-LRIU	1SDA055059R1
X3 Connector for plug-in/withdrawable circuit-breaker	1SDA055061R1
X4 Connector for fixed circuit-breaker, PR222DS, Ekip M-LRIU,	1SDA055060R1
X4 Connector for plug-in/withdrawable circuit-breaker	1SDA055062R1
LD030 D0 - Signalling unit for PR222DS/PD	1SDA064574R1
PR212/CI - Contactor control unit for Ekip M-LRIU	1SDA050708R1

Note: For the use of X3 and X4 connectors, see page 3/47.

TEST AND CONFIGURATOR UNIT

Type	
Ekip TT - Trip Test Unit	1SDA066988R1
Ekip T&P - Programming and Test Unit	1SDA066989R1

Spare parts

FLANGES FOR COMPARTMENT DOOR

Type	
Flange for compartment door for T4-T5 fixed or plug-in version	1SDA055094R1
Flange for compartment door for T4-T5 withdrawable version	1SDA055095R1
Flange for the T6 compartment door	1SDA060432R1
Flange for the withdrawable T6 compartment door	1SDA060433R1
Flange for the fixed T6 compartment door with MOE/MOE-E, RHD and FLD	1SDA060434R1
Flange for compartment door for T7-T7M fixed version	1SDA063160R1

CONNECTING TERMINALS FOR ELECTRICAL ACCESSORIES

Type	T7-T7M
Single terminal	1SDA062170R1

Note: To have a complete overview of the spare parts available for the Tmax family of circuit-breakers, please consult the “Spare Parts Catalogue”.

—
ABB S.p.A.
Electrification Business Area
Smart Power Division
5, Via Pescaria
I-24123 Bergamo - Italy
Phone: +39 035 395.111

abb.com

Stay tuned. Discover more by visiting the webpages reserved to Tmax T and be always up-to-date with the latest edition of the catalogue.

© Copyright 2025 ABB. All rights reserved.
Specifications subject to change without notice.

1SDC210300D0202 - 2025.07