TECHNICAL CATALOGUE

SACE FORMULA DSA

Low voltage molded-case circuit-breakers up to 630A

SACE FORMULA DSA is a result of ABB SACE long history of developing effective circuit-breakers. It was developed to be simple, but amazes with its extreme quality and versatility.

SACE FORMULA DSA
Index

MAIN CHARACTERISTICS 01

CIRCUIT-BREAKERS FOR POWER DISTRIBUTION AND MOTOR PROTECTION 02

ACCESSORIES 03

INSTALLATION 04

OVERALL DIMENSIONS 05

WIRING DIAGRAMS 06

Main characteristics

1/2 **SACE FORMULA DSA overview and distinctive features**

1/4 **Product conformity**

1/5 **Construction characteristics**
1/5 Identification of the SACE FORMULA DSA circuit-breakers
1/6 General information

SACE FORMULA DSA overview and distinctive features

Simplicity and quality in a single product

SACE FORMULA DSA range is the outcome of ABB SACE long history providing effective circuit-breakers. It was developed to be simple but amazing with its extreme quality and versatility.

The highlights of SACE FORMULA DSA range of molded case circuit-breakers include:

- Quick and easy selection and ordering with few, but essential, versions of circuit-breakers
- Multiple polarities, dedicated to various applications
- Accompanying accessory line
- Reduced circuit-breaker depths
- A new installation system making assembly of the circuit-breakers easier;
- Suitable for use at 50°C without derating.

The SACE FORMULA DSA family consists of four frames (A0, A1, A2 and A3) which reach up 630A. These frames are available in the fixed version, with front terminals.

The protection trip unit has fixed thermal and magnetic threshold values to put the circuit-breaker into service more rapidly. A reduced number of product codes simplifies selection and makes ordering easier. Installation is easy and the circuit-breaker is ready for immediate use.

The easy and precise choice
How simple and functional can a range of molded case circuit-breakers be? By asking this elementary question, ABB conceived the idea of this family of circuit-breakers. The result is SACE FORMULA DSA, the perfect synthesis between ABB SACE's recognized quality, reliability and simplicity, mainly about installation, sizing and fitting of accessories.

Reducing dimensions without compromising performance and reliability is an ABB SACE trademark that helps with installation and increases the work space inside switchboards and panels. SACE FORMULA DSA's compact design is a great advantage, especially for OEMs, panel builders and installers.

Product conformity

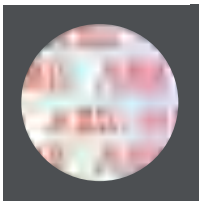

Hologram

Compliance with Standards
SACE FORMULA DSA circuit breakers and their accessories are manufactured in compliance with:
- Standards
  - IEC 60947-2
  - PNS 519:1991 (for A1 100 In=100A 2p-3p only)
- Directives
  - EC “Low Voltage Directive” (LVD) 2014/35/EU
  - EC "Electromagnetic Compatibility (EMC) Directive" 2014/30/EC

Certification of conformity with the product Standards is carried out in the ABB SACE test lab (accredited by ACCREDIA - certificate no. 0062L-02/2020) in compliance with UNI CEI EN IS0/IEC 17025 European Standard, by the Italian certification body ACAE (Association for Certification of Electrical Apparatus), member of the European LOVAG organization (Low Voltage Agreement Group) and by the Swedish certification body SEMKO belonging to the international IECEE organization.

The SACE FORMULA DSA series has a hologram on the front, obtained using special anti-forgery techniques, as a guarantee of the quality and genuineness of the circuit-breaker as an ABB SACE product.

Company quality system
The ABB SACE quality system complies with the following Standards:
- ISO 9001 International Standard
- EN ISO 9001 (equivalent) European Standards
- UNI EN ISO 9001 (equivalent) Italian Standards
- IRIS International Railway Industry Standard

The ABB SACE quality system attained its first certification with the RINA certification body in 1990.

Environmental Health & SafetY Management System, Social Responsibility and Ethics
Special care for the environment is a priority commitment for ABB SACE. This is confirmed through the company’s Environmental Management System which is certified by RINA in compliance with the International ISO14001 Standard (ABB SACE was the first industry in the electromechanical sector in Italy to obtain this recognition). In 1999 the Environmental Management System was integrated with the Occupational Health and Safety Management System according to the OHSAS 18001 Standard and later, in 2005, with the SA 8000 (Social Accountability 8000) Standard. All this amounts to solid evidence of ABB’s commitment to respecting business ethics and promoting a safe and healthy work environment.
ISO 14001, OHSAS 18001 and SA8000 recognitions together with ISO 9001 made it possible to obtain RINA BEST 4 (Business Excellence Sustainable Task) certification. In addition to this, the following markings and certifications have been achieved :
- GISA 01.02A03;
- LCA (Life Cycle Assessment).

The commitment to environmental protection becomes reality through:
- Selection of materials, processes and packaging that optimize the true environmental impact of the product
- Use of recyclable materials

Product Material Compliance
The SACE FORMULA DSA family complies with the following international regulations:
- RoHS II, Directive 2011/65/EU and Amendment 2015/863 - Restriction of Hazardous Substances;
- REACh, 2006/1907/EC, Registration, Evaluation, Authorisation and Restriction of Chemicals;
- WEEE 2012/19/EU -Waste Electrical & Electronic Equipment;
- Conflict Minerals - Dodd-Frank Consumer Protection Act. Section 1502.

Construction characteristics

Identification of the SACE FORMULA DSA circuit-breakers

The characteristics of the circuit-breakers are given on the label on the front of the circuit-breaker and on the side label.

Front label

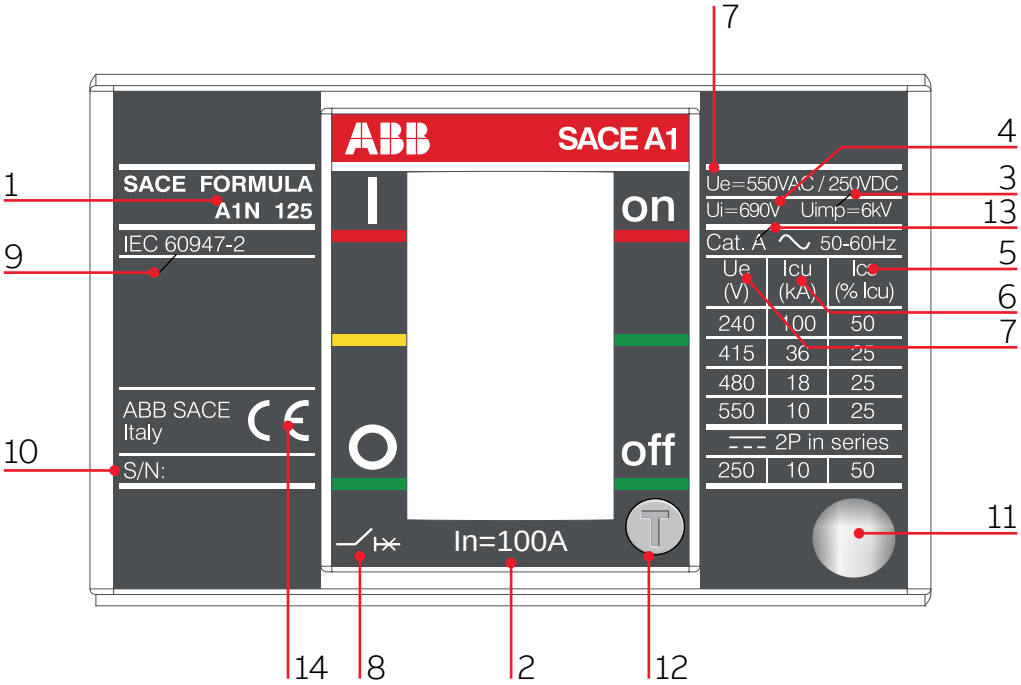

Side label

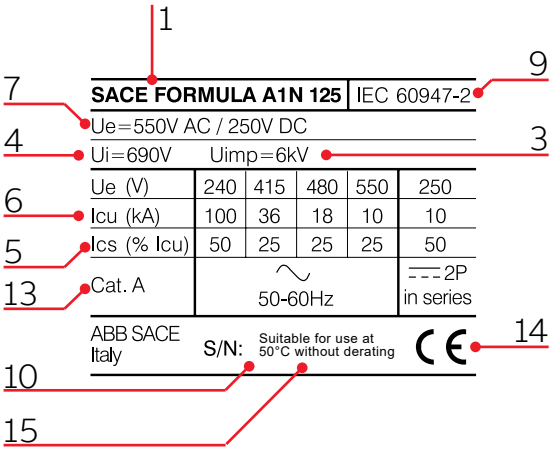

1. Name of the circuit-breaker and performance level;
2. In: rated uninterrupted current;
3. Uimp: rated impulse withstand voltage;
4. Ui: insulation voltage;
5. Ics: rated short-circuit service breaking capacity;
6. Icu: rated ultimate short-circuit breaking capacity;
7. Ue: rated service voltage;
8. Symbol of isolation behaviour;
9. Reference Standard IEC 60947-2;
10. Serial number;
11. Anti-forgery;
12. Test pushbutton;
13. Category of use;
14. CE Marking;
15. Utilization at 50°C (except for A1 125A).

Construction characteristics
General information

—
Double insulation

—
Positive operation

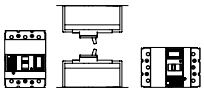

—
Installation positions

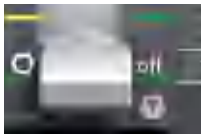

—
Test pushbutton

All the molded case circuit-breakers in the SACE FORMULA DSA range are constructed in accordance with the following construction characteristics:

- Double insulation
- Positive operation
- Isolation behavior
- Electromagnetic compatibility
- Tropicalization
- Reverse feedable power supply

Versatility of the installation. It is possible to mount the circuit-breaker in horizontal, vertical or lying down position without undergoing any derating of the rated characteristics.

No nominal performance derating for use up to an altitude of 2000m. Above 2000m, the properties of the atmosphere change (composition of the air, dielectric strength, cooling power and pressure), having an impact on the main parameters that define the circuit-breaker. The altitude table below gives the changes to the main performance parameters.

SACE FORMULA DSA circuit-breakers can be used in ambient temperatures between -25 °C to 70 °C and stored in a room with atmospheric temperature between -40 °C to 70 °C.
SACE FORMULA DSA circuit-breakers listed below are designed to hold 100% In at 50°C without tripping in normal condition:

- SACE FORMULA DSA A0, A1 and A2, up to 250A (except A1 125);
- SACE FORMULA DSA A3 300-400A special version 50°C.

For detailed temperature performances of all SACE FORMULA DSA breakers, please refer to paragraph “Temperature performances” in the “Characteristic Curves and Technical Information” Chapter.
All SACE FORMULA DSA circuit-breakers are fitted with a test pushbutton, which allows the release test to be performed. This test must be carried out with the circuit-breaker closed.

—
Altitude

		2000m	3000m	4000m	5000m
		A0-A1-A2-A3	A0-A1-A2-A3	A0-A1-A2-A3	A0-A1-A2-A3
Rated service voltage, Ue	(V)	550	484	429	374
Rated uninterrupted current	%	100	98	95	90

—
Weight

	A0 [kg]	A1 [kg]	A2 [kg]	A3 [kg]
Circuit-breaker 1-pole	-	0.245	-	-
Circuit-breaker 2-poles	-	0.47	0.73	-
Circuit-breaker 3-poles	0.7	0.7	1.1	3.25
Circuit-breaker 4-poles	-	0.925	1.145	4.15

—
Protection degrees IP (International Protection)

	Circuit-breaker with front	Circuit-breaker without front (1)	Circuit-breaker with RHE RHD	Circuit-breaker with HTC	Circuit-breaker with LTC	Circuit-breaker with FLD
A	IP 40	IP 20	IP 40	IP 40	IP 40	IP 40
B	IP 20	IP 20	IP 20	IP 40	IP 30	IP 20

(1) During installation of the electrical accessories

Circuit-breakers for power distribution and motor protection

2/2 **General characteristics**

2/6 **Thermal-magnetic trip units**
2/7 Ordering codes

2/11 **Electronic trip units**
2/11 Ordering codes

2/12 **Magnetic only MF and ELT I trip units**
2/13 Ordering codes

General characteristics

The SACE FORMULA DSA circuit-breakers from 15A to 630A consist of the interruption part together with the trip unit and can be installed:
- directly on the back plate of cubicles;
- on a DIN rail (A0, A1 and A2);
- back door (A0, A1 with the exclusion of 1-pole version, A2 and A3).

They are characterized by:
- fixed version;
- polarity: 1 pole (A1), 2 poles (A1 and A2), 3 poles (A0, A1, A2 and A3), 4 poles (A1, A2 and A3);
- maximum breaking capacity of 10kA for A0, 36kA for A1 and A2 and of 50kA for A3 at 415V AC;
- fixed thermal-magnetic trip unit (TMF) for protection of networks in alternating and direct current (A0, A1, A2, A3);
- ELT LI electronic trip unit with fixed thresholds for the protection of networks in alternating current (A3);
- only two depths: 60mm (A0, A1 and A2) and 103.5mm (A3);
- standard front terminals;
- the possibility of use at 50°C without derating up to 250A (except for A1 125A);
- a special version for A3 300A-400A for use at 50°C.

— 01 3-poles
— 02 1-pole
— 03 2-poles
— 04 3-poles
— 05 4-poles

SACE FORMULA DSA A0

— 01

SACE FORMULA DSA A1

— 02

— 03

— 04

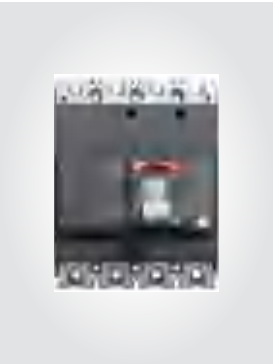

— 05

—
06
2-poles
—
07
3-poles
—
08
4-poles
—
09
3-poles
—
010
4-poles

SACE FORMULA DSA A2

—
06

—
07

—
08

SACE FORMULA DSA A3

—
09

—
10

General characteristics

		A0			**A1**							**A2**				**A3**	
Frame size	[A]	100			125							250				400/630	
Rated current, In	[A]	30...100			15...125							125...250				320...630	
Poles	[Nr]	3			1, 2, 3, 4							2, 3, 4				3, 4	
Rated service voltage, Ue (AC) 50-60 Hz	[V]	415 (3p)			550 (2p-3p-4p); 415 (1p)							550 (2p-3p-4p)				550	
(DC)	[V]	-			250 (2p-3p-4p); 125 (1p)							250 (2p-3p-4p)				250	
Rated insulation voltage, Ui	[V]	690			690							690				690	
Rated impulse withstand voltage, Uimp	[kV]	6			6							6				6	
Versions		Fixed			Fixed							Fixed				Fixed	
Performance Level		A	B	C	A	B	C		N			B	**C**	N		N	S
Poles	[Nr]	3	3	3	3/4	3/4	1	3/4	1	2	3/4	3/4	3/4	2	3/4	3/4	3/4
Rated ultimate short-circuit breaking capacity, Icu																	
Icu @ 240 V 50-60 Hz (AC)	[kA]	7.5	10	10	10	25	18	30	25	50	100	25	50	50	85	85	100
Icu @ 380 V 50-60 Hz (AC)	[kA]	5	7.5	10	10	18	2.5	25	5	36	36(5)	18	25	36	36	36	50
Icu @ 415 V 50-60 Hz (AC)	[kA]	5	7.5	10	10	18	2.5	25	5	36	36(5)	18	25	36	36	36	50
Icu @ 440 V 50-60 Hz (AC)	[kA]	-	-	-	8	15	-	20	-	25	25	15	20	25	25	36	50
Icu @ 480 V 50-60 Hz (AC)	[kA]	-	-	-	7.5	10	-	15	-	18	18	15	18	18	25	25	35
Icu @ 500 V 50-60 Hz (AC)	[kA]	-	-	-	5	5	-	8	-	10	10	5	8	10	10	20	25
Icu @ 550 V 50-60 Hz (AC)	[kA]	-	-	-	5	5	-	8	-	10	10	5	8	10	10	15	20
Icu @ 125 V (DC) 1 pole	[kA]	-	-	-	-	-	5	-	10	-	-	-	-	-	-	-	-
Icu @ 250 V (DC) 2 poles in series	[kA]	-	-	-	5	5	-	10	-	10	10	18	25	10	36	36	50
Rated short-circuit service breaking capacity, Ics																	
Ics @ 240 V 50-60 Hz (AC)	[kA]	50%	50%	50%	50%	50%	50%	50%	50%	50%	50%	50%	50%	50%	50%	50%	50%
Ics @ 380 V 50-60 Hz (AC)	[kA]	100%	50%(6)	50%	50%	50%	50%	50%	50%	50%	50%	50%	50%	50%	50%	50%	50%
Ics @ 415 V 50-60 Hz (AC)	[kA]	100%	50%(6)	50%	50%	50%	50%	25%(2)	25%	25%	25%	50%	50%	50%	50%	50%	50%
Ics @ 440 V 50-60 Hz (AC)	[kA]	-	-	-	50%	25%(1)	-	25%	-	25%	25%	50%	50%	50%	50%	50%	50%
Ics @ 480 V 50-60 Hz (AC)	[kA]	-	-	-	50%	50%	-	25%(1)	-	25%	25%(1)	50%	50%	50%	50%	50%	50%
Ics @ 500 V 50-60 Hz (AC)	[kA]	-	-	-	50%	50%	-	25%(3)	-	25%	25%	50%	50%	50%	50%	50%	50%
Ics @ 550 V 50-60 Hz (AC)	[kA]	-	-	-	50%	50%	-	25%(3)	-	25%	25%	50%	50%	50%	50%	50%	50%
Ics @ 250 V (DC) 2 poles in series	[kA]	-	-	-	50%	50%	50%	50%	50%	50%	50%	50%	50%	50%	50%	50%	50%

(1) 5kA; (2) 9kA; (3) 2.5kA; (4) Special version; (5) In=15A, Icu=30kA; (6) 5kA

			A0			A1							A2						A3	
Rated short-circuit making capacity, Icm																				
Icm @ 240 V 50-60 Hz (AC)		[kA]	12.75	17	17	52.5	52.5	36	63	52.5	105	220	52.5	36	105	52.5	105	187	187	220
Icm @ 380 V 50-60 Hz (AC)		[kA]	8.25	12.75	17	17	36	3.8	52.5	7.5	75.6	75.6	36	3.8	52.5	7.5	75.6	75.6	75.6	105
Icm @ 415 V 50-60 Hz (AC)		[kA]	8.25	12.75	17	17	36	3.8	52.5	7.5	75.6	75.6	36	3.8	52.5	7.5	75.6	75.6	75.6	105
Icm @ 440 V 50-60 Hz (AC)		[kA]	-	-	-	13.6	30	-	40	-	52.5	52.5	30	-	40	-	52.5	52.5	75.6	105
Icm @ 480 V 50-60 Hz (AC)		[kA]	-	-	-	12.8	17	-	30	-	36	17	30	-	36	-	36	52.5	52.5	73.5
Icm @ 500 V 50-60 Hz (AC)		[kA]	-	-	-	7.5	7.5	-	13.6	-	17	17	7.5	-	13.6	-	17	17	40	52.5
Icm @ 550 V 50-60 Hz (AC)		[kA]	-	-	-	7.5	7.5	-	13.6	-	17	17	7.5	-	13.6	-	17	17	30	40
Utilization category (IEC 60947-2)			A			A							A						A	
Hold 100% In at 50°C		[A]	30...100			15...100							125...250						300-400(4)	
Reference Standard			IEC 60947-2			IEC 60947-2							IEC 60947-2						IEC 60947-2	
Isolation behaviour			■			■							■						■	
Fixing onto DIN rail			DIN EN 50022			DIN EN 50022							DIN EN 50022						-	
Mechanical life (G2.10)		[No. operations]	8500			8500							10000						5000	
Electrical life @ 415 V (AC)		[No. operations]	1500			1500							4000						2000	
Total opening time	Shunt opening release (SOR)	[ms]	15			15							15						15	
	Undervoltage release (UVR)	[ms]	15			15							15						< 25	
Dimensions (Width x Depth x Height)	1 pole	[mm]	-			25.4x60x130							-						-	
	2 poles	[mm]	-			50.8x60x130							70x60x150						-	
	3 poles	[mm]	76.2x60x130			76.2x60x130							105x60x150						139.5x 103.5x 205	
	4 poles	[mm]	-			101.2x60x130							140x60x150						186x 103.5x 205	
Weight	1 pole	[kg]	-			0.245							-						-	
	2 poles	[kg]	-			0.470							0.730						-	
	3 poles	[kg]	0.700			0.700							1.100						3.25	
	4 poles	[kg]	-			0.925							1.450						4.15	
Trip Unit																				
Thermal-magnetic TMF			■			■							■						■ (up to 500A)	
Electronic ELT LI			-			-							-						■ (up to 630A)	
Electronic ELT I			-			-							-						■	
Magnetic only MF			-			■							■						■	

(1) 5kA; (2) 9kA; (3) 2.5kA; (4) Special version; (5) In=15A, 16A; Icu=30kA; (6) 5kA

Thermal-magnetic trip units

The thermal-magnetic trip units TMF, with fixed thermal and magnetic threshold, are generally used in power distribution plants.
They allow protection against overloads due to the thermal device and protection against short circuit due to the magnetic device:

- Thermal protection (L): fixed threshold I_1= 1x1In, with long inverse time trip curve
- Magnetic protection (I): fixed threshold I_3= 10xIn, with instantaneous trip curve
- Neutral at 100% for 4-pole circuit-breakers.

Fixed thermal-magnetic trip unit TMF
An example with SACE FORMULA DSA A2 In=125A

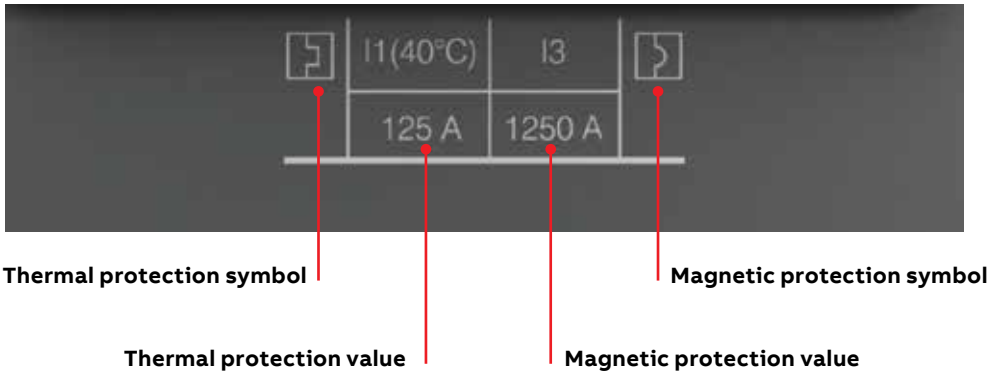

SACE FORMULA DSA A0 with trip unit TMF

TMF						
L	In (A)	30	40	63	80	100
I_1= 1xIn	Neutral (A) — 100%	30	40	63	80	100
I	I_3 (A)	300	400	630	800	1000
I_3= 10xIn	Neutral (A) — 100%	400	400	630	800	1000

SACE FORMULA DSA A1 with trip unit TMF

TMF																
L	In (A)	15	16	20	25	30	32	40	50	60	63	70	80	90	100	125
I_1= 1xIn	Neutral (A) — 100%	15	16	20	25	30	32	40	50	60	63	70	80	90	100	125
I	I_3 (A)	400	400	400	400	400	400	400	500	600	630	700	800	900	1000	1250
I_1= 10xIn	Neutral (A) — 100%	400	400	400	400	400	400	400	500	600	630	700	800	900	1000	1250

SACE FORMULA DSA A2 with trip unit TMF

TMF								
L	In (A)	125	150	160	175	200	225	250
I_1 = 1xIn	Neutral (A) — 100%	125	150	160	175	200	225	250
I	I_3 (A)	1250	1500	1600	1750	2000	2250	2500
I_3= 10xIn	Neutral (A) — 100%	1250	1500	1600	1750	2000	2250	2500

SACE FORMULA DSA A3 with trip unit TMF

TMF				
L	In (A)	125	150	160
I_1 = 1xIn	Neutral (A) — 100%	125	150	160
I	I_3 (A)	1250	1500	1600
I_3= 10xIn	Neutral (A) — 100%	1250	1500	1600

Ordering information

A0 100A - Fixed (F) 3 poles - Front terminals (F) - Hold 100% In at 50°C				
Thermal-magnetic trip unit - TMF Icu (415V)				
In	I_3	A (5kA)	B (7.5kA)	C (10kA)
30	400	1SDA079800R1	1SDA079805R1	1SDA079810R1
40	400	1SDA079801R1	1SDA079806R1	1SDA079811R1
63	630	1SDA079802R1	1SDA079807R1	1SDA079812R1
80	800	1SDA079803R1	1SDA079808R1	1SDA079813R1
100	1000	1SDA079804R1	1SDA079809R1	1SDA079814R1

A1 125A - Fixed (F) 1 pole - Front terminals (F) - Hold 100% In at 50°C			
Thermal-magnetic trip unit - TMF Icu (240 V)			
In	I_3	C (18kA)	N (25kA)
15	400	1SDA066485R1	-
16	400	1SDA068745R1	-
20	400	1SDA066486R1	1SDA066686R1
25	400	1SDA066487R1	1SDA066687R1
30	400	1SDA066488R1	1SDA066688R1
32	400	1SDA068754R1	1SDA068755R1
40	400	1SDA066489R1	1SDA066689R1
50	500	1SDA066490R1	1SDA066690R1
60	600	1SDA066491R1	1SDA066691R1
63	630	1SDA068765R1	1SDA068766R1
70	700	1SDA066492R1	1SDA066692R1
80	800	1SDA066493R1	1SDA066693R1
90	900	1SDA066494R1	1SDA066694R1
100	1000	1SDA066495R1	1SDA066695R1
125	1250	1SDA066496R1 (1)	1SDA066696R1 (1)

(1) Derating for use at 50°C

A1 125A - Fixed (F) 2 poles - Front terminals (F) - Hold 100% In at 50°C		
Thermal-magnetic trip unit - TMF Icu (415 V)		
In	I_3	N (36kA)
15	400	1SDA068789R1 (2)
16	400	1SDA068790R1
20	400	1SDA066497R1
25	400	1SDA066498R1
30	400	1SDA066499R1
32	400	1SDA068756R1
40	400	1SDA066500R1
50	500	1SDA066501R1
60	600	1SDA066502R1
63	630	1SDA068767R1
70	700	1SDA066503R1
80	800	1SDA066504R1
90	900	1SDA066505R1
100	1000	1SDA066506R1
125	1250	1SDA066507R1 (1)

(1) Derating for use at 50°C; (2) 30kA

Ordering information

A1 125A - Fixed (F) 3 poles - Front terminals (F) - Hold 100% In at 50°C					
Thermal-magnetic trip unit - TMF Icu (415 V)					
In	**I_3**	**A (10kA)**	**B (18kA)**	**C (25kA)**	**N (36kA)**
15	400	1SDA066510R1	1SDA066697R1	1SDA066709R1	1SDA066721R1 (2)
16	400	1SDA068746R1	1SDA068747R1	1SDA068748R1	1SDA068749R1 (2)
20	400	1SDA066511R1	1SDA066698R1	1SDA066710R1	1SDA066722R1
25	400	1SDA066512R1	1SDA066699R1	1SDA066711R1	1SDA066723R1
30	400	1SDA066513R1	1SDA066700R1	1SDA066712R1	1SDA066724R1
32	400	1SDA068757R1	1SDA068758R1	1SDA068759R1	1SDA068760R1
40	400	1SDA066514R1	1SDA066701R1	1SDA066713R1	1SDA066725R1
50	500	1SDA066515R1	1SDA066702R1	1SDA066714R1	1SDA066726R1
60	600	1SDA066516R1	1SDA066703R1	1SDA066715R1	1SDA066727R1
63	630	1SDA068768R1	1SDA068769R1	1SDA068770R1	1SDA068771R1
70	700	1SDA066517R1	1SDA066704R1	1SDA066716R1	1SDA066728R1
80	800	1SDA066518R1	1SDA066705R1	1SDA066717R1	1SDA066729R1
90	900	1SDA066519R1	1SDA066706R1	1SDA066718R1	1SDA066730R1
100	1000	1SDA066520R1	1SDA066707R1	1SDA066719R1	1SDA066731R1
125	1250	1SDA066521R1 (1)	1SDA066708R1 (1)	1SDA066720R1 (1)	1SDA066732R1 (1)

(1) Derating for use at 50°C; (2) 30kA

A1 125A - Fixed (F) 4 poles - Front terminals (F) - Hold 100% In at 50°C					
Thermal-magnetic trip unit - TMF Icu (415 V)					
In	**I_3**	**A (10kA)**	**B (18kA)**	**C (25kA)**	**N (36kA)**
15	400	1SDA066524R1	1SDA066733R1	1SDA066745R1	1SDA066757R1 (2)
16	400	1SDA068750R1	1SDA068751R1	1SDA068752R1	1SDA068753R1 (2)
20	400	1SDA066525R1	1SDA066734R1	1SDA066746R1	1SDA066758R1
25	400	1SDA066526R1	1SDA066735R1	1SDA066747R1	1SDA066759R1
30	400	1SDA066527R1	1SDA066736R1	1SDA066748R1	1SDA066760R1
32	400	1SDA068761R1	1SDA068762R1	1SDA068763R1	1SDA068764R1
40	400	1SDA066528R1	1SDA066737R1	1SDA066749R1	1SDA066761R1
50	500	1SDA066529R1	1SDA066738R1	1SDA066750R1	1SDA066762R1
60	600	1SDA066530R1	1SDA066739R1	1SDA066751R1	1SDA066763R1
63	630	1SDA068772R1	1SDA068773R1	1SDA068774R1	1SDA068775R1
70	700	1SDA066531R1	1SDA066740R1	1SDA066752R1	1SDA066764R1
80	800	1SDA066532R1	1SDA066741R1	1SDA066753R1	1SDA066765R1
90	900	1SDA066533R1	1SDA066742R1	1SDA066754R1	1SDA066766R1
100	1000	1SDA066534R1	1SDA066743R1	1SDA066755R1	1SDA066767R1
125	1250	1SDA066535R1 (1)	1SDA066744R1 (1)	1SDA066756R1 (1)	1SDA066768R1 (1)

(1) Derating for use at 50°C; (2) 30kA

A2 250A - Fixed (F) 2 poles - Front terminals (F) - Hold 100% In at 50°C		
Thermal-magnetic trip unit - TMF Icu (415 V)		
In	**I_3**	**N (36kA)**
125	1250	1SDA066542R1
150	1500	1SDA068778R1
160	1600	1SDA066543R1
175	1750	1SDA066544R1
200	2000	1SDA066545R1
225	2250	1SDA066546R1
250	2500	1SDA066547R1

A2 250A - Fixed (F) 3 poles - Front terminals (F) - Hold 100% In at 50°C				
Thermal-magnetic trip unit - TMF Icu (415 V)				
In	**I_3**	**B (18kA)**	**C (25kA)**	**N (36kA)**
125	1250	1SDA066548R1	1SDA066775R1	1SDA066781R1
150	1500	1SDA068779R1	1SDA068780R1	1SDA068781R1
160	1600	1SDA066549R1	1SDA066776R1	1SDA066782R1
175	1750	1SDA066550R1	1SDA066777R1	1SDA066783R1
200	2000	1SDA066551R1	1SDA066778R1	1SDA066784R1
225	2250	1SDA066552R1	1SDA066779R1	1SDA066785R1
250	2500	1SDA066553R1	1SDA066780R1	1SDA066786R1

A2 250A - Fixed (F) 4 poles - Front terminals (F) - Hold 100% In at 50°C				
Thermal-magnetic trip unit - TMF Icu (415 V)				
In	**I_3**	**B (18kA)**	**C (25kA)**	**N (36kA)**
125	1250	1SDA066554R1	1SDA066787R1	1SDA066793R1
150	1500	1SDA068782R1	1SDA068783R1	1SDA068784R1
160	1600	1SDA066555R1	1SDA066788R1	1SDA066794R1
175	1750	1SDA066556R1	1SDA066789R1	1SDA066795R1
200	2000	1SDA066557R1	1SDA066790R1	1SDA066796R1
225	2250	1SDA066558R1	1SDA066791R1	1SDA066797R1
250	2500	1SDA066559R1	1SDA066792R1	1SDA066798R1

Ordering information

A3 400A - Fixed (F) 3 poles - Front terminals (F)			
Thermal-magnetic trip unit - TMF Icu (415 V)			
In	**I_3**	**N (36kA)**	**S (50kA)**
320	3200	1SDA066560R1	1SDA066562R1
400	4000	1SDA066561R1	1SDA066563R1

A3 630A - Fixed (F) 3 poles - Front terminals (F)			
Thermal-magnetic trip unit - TMF Icu (415 V)			
In	**I_3**	**N (36kA)**	**S (50kA)**
500	5000	1SDA066564R1	1SDA066565R1

A3 400A - Fixed (F) 4 poles - Front terminals (F)			
Thermal-magnetic trip unit - TMF Icu (415 V)			
In	**I_3**	**N (36kA)**	**S (50kA)**
320	3200	1SDA066568R1	1SDA066570R1
400	4000	1SDA066569R1	1SDA066571R1

A3 630A - Fixed (F) 4 poles - Front terminals (F)			
Thermal-magnetic trip unit - TMF Icu (415 V)			
In	**I_3**	**N (36kA)**	**S (50kA)**
500	5000	1SDA066572R1	1SDA066573R1

A3 400A - Fixed (F) 3 poles - Front terminals (F) - Hold 100% In at 50°C			
Thermal-magnetic trip unit - TMF Icu (415 V)			
In	**I_3**	**N (36kA)**	**S (50kA)**
300	3000	1SDA068809R1	1SDA068960R1
400	4000	1SDA068810R1	1SDA068961R1

Electronic trip units
Ordering codes

The ELT LI electronic trip unit, available for A3 only, provides protection functions against overload L and short-circuit I:

- protection against overload (L): fixed threshold I_1=630A, with long inverse time trip curve;
- protection against short-circuit (I): fixed threshold I_3=6000A, with instantaneous time trip curve;
- neutral at 100% for four-pole circuit-breakers

ELT LI fixed electronic trip unit
An example with SACE FORMULA DSA A3 In=630A

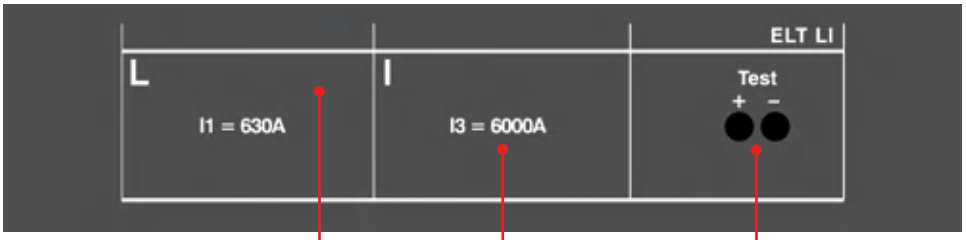

Protection against overload threshold

Protection against short-circuit value

Socket for TT1 test unit

SACE FORMULA DSA A3 with trip unit ELT LI				
Protection function	**Trip threshold**	**Trip curve**	**Excludability**	**Relation**
L Against overload with long inverse time delay trip according to IEC 60947-2 Standard	Fixed threshold I_1=630A Tolerance: trip between 1.1...1.30xI_1	t1= 12 s at 6xI_1 Tolerance: ± 10% up to 6xIn ± 20% above 6xIn	no	t=k/I2
I Against short-circuit with instantaneous trip with fixed threshold	Fixed threshold I_3=6000A Tolerance: ± 10%	instantaneous	no	t=k

A3 630A - Fixed (F) 3 poles - Front terminals (F)			
Electronic trip unit - ELT LI Icu (415 V)			
In	**I_3**	**N (36kA)**	**S (50kA)**
630	6000	1SDA066566R1	1SDA066567R1

A3 630A - Fixed (F) 4 poles - Front terminals (F)			
Electronic trip unit - ELT LI Icu (415 V)			
In	**I_3**	**N (36kA)**	**S (50kA)**
630	6000	1SDA066574R1	1SDA066575R1

Trip test unit	
TT1 - Trip test unit	1SDA037121R1

Magnetic only and ELT I trip units
Ordering codes

The magnetic only trip units MF and ELT I with fixed threshold are generally used for the protection of motor based applications such as fans, water pumps, vacuum systems which are often part of fire protection systems. Magnetic releases are used also for the protection of emergency lights and elevators.

- Magnetic protection (I): non-adjustable threshold I_3 = 12 x In, instantaneous trip curve

Magnetic only trip unit
An example with SACE FORMULA DSA A2 In = 125A

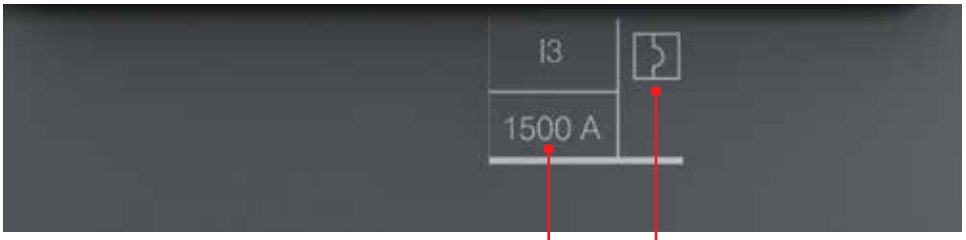

Magnetic protection symbol

Magnetic protection threshold

—
SACE FORMULA DSA A1 - MF

MF							
In (A)	32	40	50	60	70	80	100
I_3= 12xIn	384	480	600	720	840	960	1200

—
SACE FORMULA DSA A2 - MF

MF				
In (A)	100	125	160	200
I_3= 12xIn	1200	1500	1920	2400

—
SACE FORMULA DSA A3 - ELT I

MF	
In (A)	32
I_3= 12xIn	384

A1 125A - Fixed (F) 3 poles - Front terminals (F) - Hold 100% In at 50°C					
Magnetic trip unit - MF Icu (415 V)					
In	**I_3**	**A (10kA)**	**B (18kA)**	**C (25kA)**	**N (36kA)**
32	384	1SDA076688R1	1SDA076695R1	1SDA076702R1	1SDA076709R1
40	480	1SDA076689R1	1SDA076696R1	1SDA076703R1	1SDA076710R1
50	600	1SDA076690R1	1SDA076697R1	1SDA076704R1	1SDA076711R1
60	720	1SDA076691R1	1SDA076698R1	1SDA076705R1	1SDA076712R1
70	840	1SDA076692R1	1SDA076699R1	1SDA076706R1	1SDA076713R1
80	960	1SDA076693R1	1SDA076700R1	1SDA076707R1	1SDA076714R1
100	1200	1SDA076694R1	1SDA076701R1	1SDA076708R1	1SDA076715R1

A2 250A - Fixed (F) 3 poles - Front terminals (F) - Hold 100% In at 50°C				
Magnetic trip unit - MF Icu (415 V)				
In	**I_3**	**B (18kA)**	**C (25kA)**	**N (36kA)**
100	1200	1SDA076716R1	1SDA076720R1	1SDA076724R1
125	1500	1SDA076717R1	1SDA076721R1	1SDA076725R1
160	1920	1SDA076718R1	1SDA076722R1	1SDA076726R1
200	2400	1SDA076719R1	1SDA076723R1	1SDA076727R1

A3 400A - Fixed (F) 3 poles - Front terminals (F)			
Magnetic trip unit - MF Icu (415 V)			
In	**I_3**	**N (36kA)**	**S (50kA)**
250	3000	1SDA076728R1	1SDA076732R1
320	3840	1SDA076729R1	1SDA076733R1

A3 630A - Fixed (F) 3 poles - Front terminals (F)			
Magnetic trip unit - MF Icu (415 V)			
In	**I_3**	**N (36kA)**	**S (50kA)**
400	4800	1SDA076730R1	1SDA076734R1

A3 630A - Fixed (F) 3 poles - Front terminals (F)			
Electronic trip unit - ELT I Icu (415 V)			
In	**I_3**	**N (36kA)**	**S (50kA)**
500	6000	1SDA076731R1	1SDA076735R1

Accessories

3/2 **Panorama of the accessories**

3/4 **Mechanical accessories and ordering codes**

3/12 **Electrical accessories and ordering codes**

3/16 **FORMULA Link**

3/20 Ordering codes

3/21 Examples of order

Panorama of the accessories

Caption

1. EF: extended front terminals
2. ES: extended spread terminals
3. FC CuAl: front terminals for copper and aluminum cables
4. PS: phase separators
5. HTC: high terminal cover
6. LTC: low terminal cover
7. Sealable screw
8. AUX-C/AUE-C: auxiliary contact
9. SOR-C/UVR-C: service releases
10. DIN: DIN rail
11. FORMULA Link
12. PLL: padlocks

SACE FORMULA DSA A1

1-pole accessories

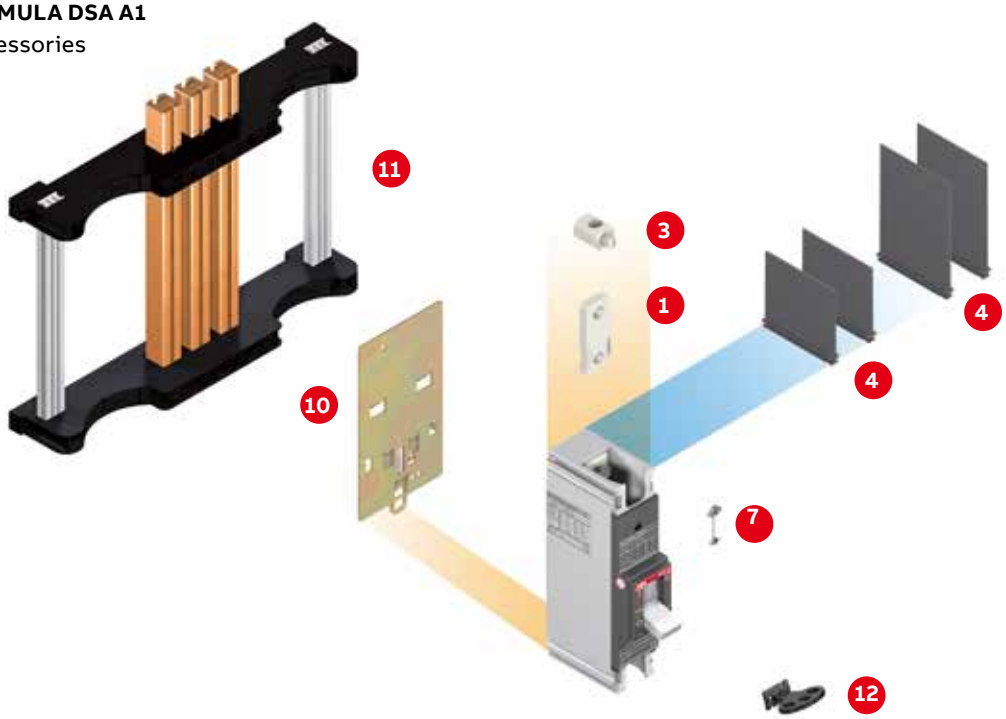

SACE FORMULA DSA A1–A2

2-poles accessories

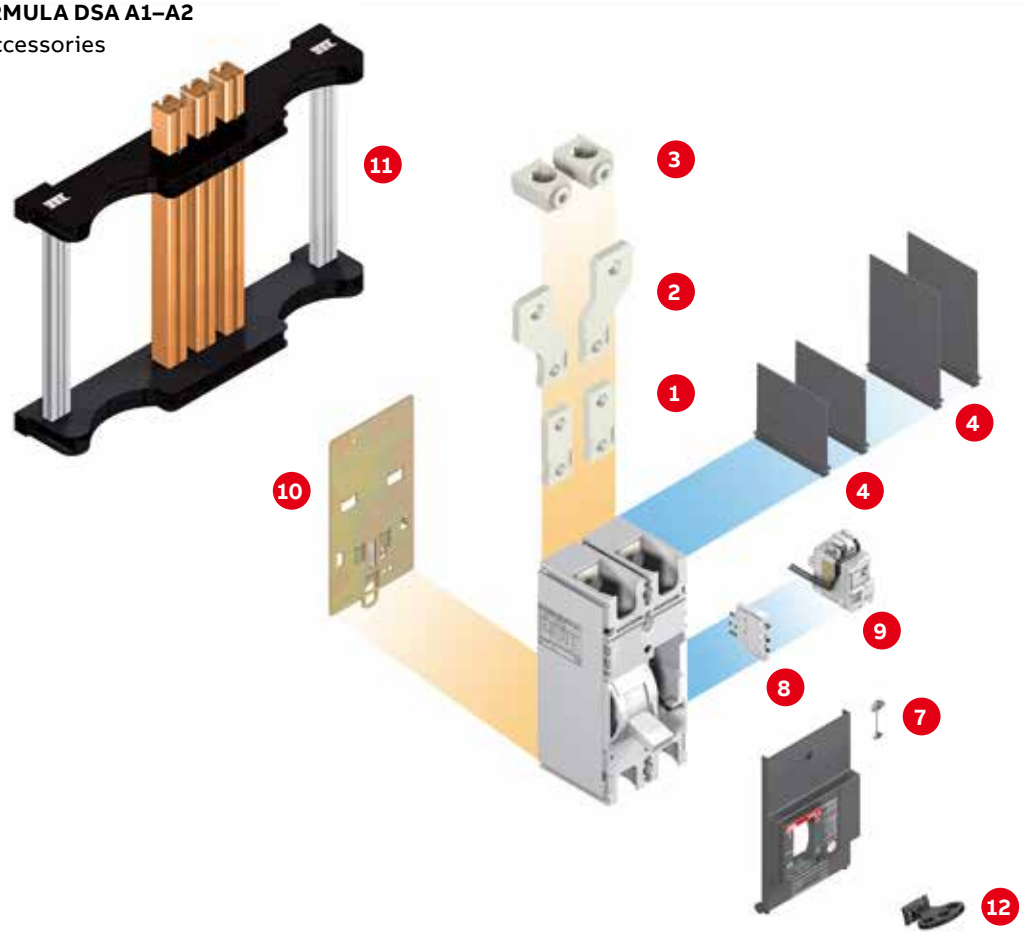

All SACE FORMULA DSA accessories are sold separately to be field installed by customers.

SACE FORMULA DSA A0-A1–A2-A3

3-poles/4-poles accessories

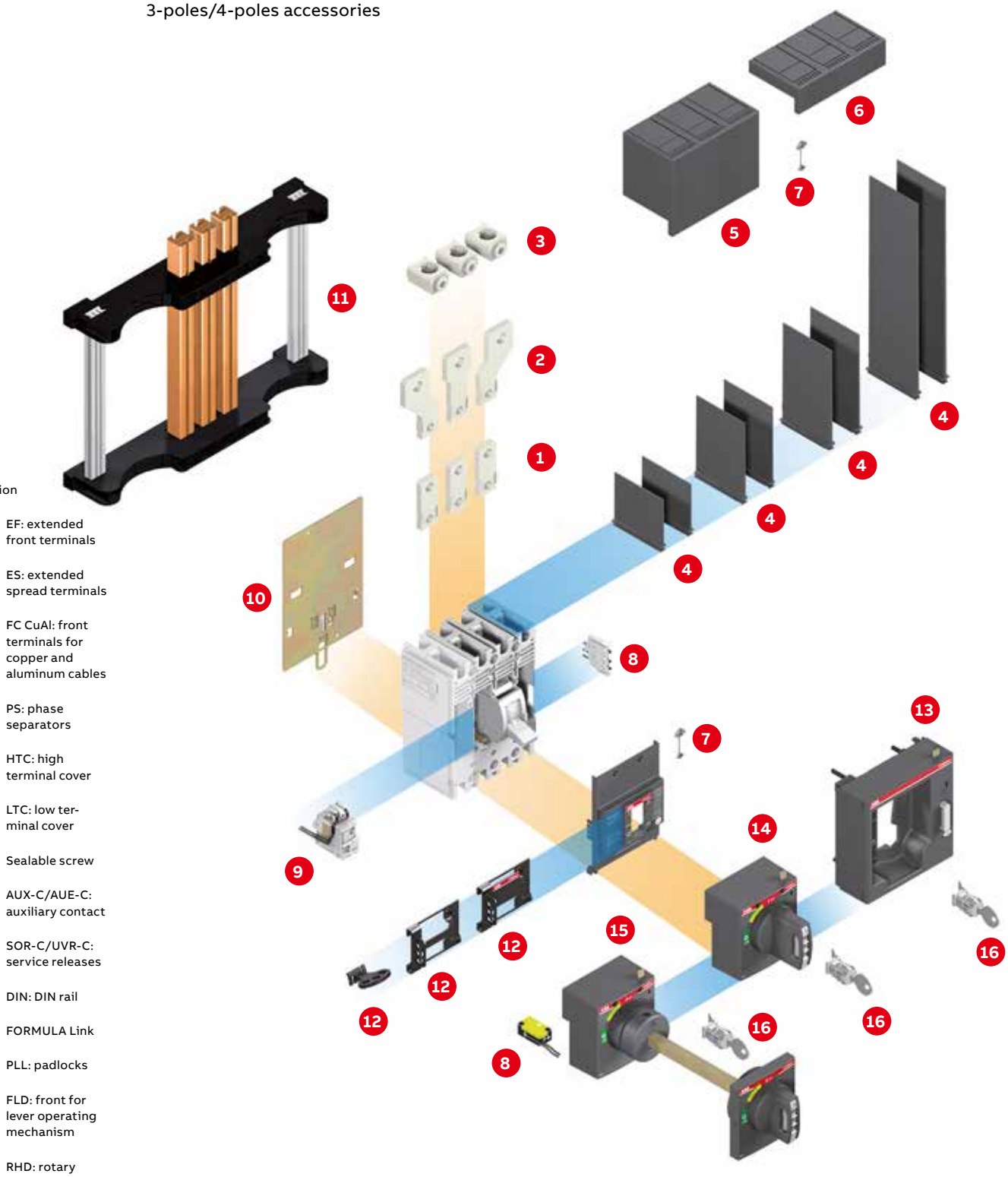

Caption

1. EF: extended front terminals
2. ES: extended spread terminals
3. FC CuAl: front terminals for copper and aluminum cables
4. PS: phase separators
5. HTC: high terminal cover
6. LTC: low terminal cover
7. Sealable screw
8. AUX-C/AUE-C: auxiliary contact
9. SOR-C/UVR-C: service releases
10. DIN: DIN rail
11. FORMULA Link
12. PLL: padlocks
13. FLD: front for lever operating mechanism
14. RHD: rotary handle direct
15. RHE: IEC = extended rotary handle
16. Key lock

All SACE FORMULA DSA accessories are sold separately to be field installed by customers.

Mechanical accessories and ordering codes

Connection terminals
The connection terminals allow the circuit-breaker to be connected in the most suitable way for the desired application. Various termination options are available in both UL and IEC rated formats.
The front terminals allow cables or busbars to be connected directly from the front of the circuit-breaker (cable lugs are not included).

Different types of terminals can be combined (for example, one type for the line and a different type for the load side).
The standard version of the circuit-breaker is supplied with front terminals (F). By ordering the special kits or half-kits, it is also possible to select among the following types:
- front extended terminals (EF);
- front extended spread terminals (ES);
- front terminals for copper and aluminium cables (FCCuAl).

—
01 Terminal F
—
02 Terminal F with cable lug
—
03 Terminal F with busbar

—
01

—
02

—
03

—
Front terminals - F

		Busbar dimensions MAX				Cable lug (mm)		Tightening torque [Hole dimension] and [Nm]				Terminal covers				Separators			
Type	Poles	W	H	D	ø	W	ø	Terminal		Cable or busbar		2	7.5	50	60	50	80	100	200
A0	3	15	6	5	6.5	15	6.5	-	-	M6	4	-	-	R	-	-	-	-	-
A1	1 2 3 4	15	6	5	6.5	15	6.5	-	-	M6	4	-	-	R	-	S_{CB} (2)	-	R	-
A2 (1)	2 3 4	25	8	6	8.5	24	8.5	-	-	M8	8	-	-	-	R	-	S_{CB}	R	-
A3	3 4	35	11	10	10.5	35	10.5	-	-	M10	28	R	-	-	R	-	-	S_{CB}	R

(1) insulation of the switchboard door and insulating plate on the back of the circuit-breaker for use at Ue≥415 V mandatory
(2) 2p, 3p, and 4p versions only

—
04 Terminal EF
—
05 Terminal EF with busbar

—
04

—
05

—
Front extended terminals - EF

		Busbar dimension MAX			Cable lug (mm)		Tightening torque				Terminal covers				Separators			
Type	Poles	W	D	ø	W	ø	Terminal		Cable or busbar		2	7.5	50	60	50	80	100	200
A0	3	15	5	8.5	15	8.5	M6	3	M8	9	-	-	R	-	S_T (2)	-	R	-
A1	1 2 3 4	15	5	8.5	15	8.5	M6	3	M8	9	-	-	R	-	S_T (2)	-	R	-
A2 (1)	2 3 4	25	6	9	NA	NA	M8	8	M8	9	-	-	-	R	-	S_{CB}	R	-
A3	3 4	30	7	11	30	11	M10	28	M10	18	-	-	-	R	-	-	S_{CB}	R

(1) insulation of the switchboard door and insulating plate on the back of the circuit-breaker for use at Ue≥415 V mandatory
(2) In EF terminal kit, 50mm phase separators are standard supply

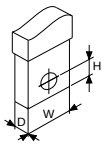

W = Width
H = Hole height
D = Depth
ø = Diameter
R = On request
S_{CB} = Supplied as standard with circuit-breaker, not available in the loose terminal kit
S_T = Supplied as standard with the terminal kit

—
01 Terminal ES
—
02 Terminal ES with cable lug
—
03 Terminal ES with busbar

—
01

—
02

—
03

—
Front extended spread terminal - ES

		Busbar dimension MAX			Cable lug (mm)		Tightening torque				Terminal covers				Separators			
Type	**Poles**	**W**	**D**	**ø**	**W**	**ø**	**Terminal**		**Cable or busbar**		**2**	**7.5**	**50**	**60**	**50**	**80**	**100**	**200**
A0	3	20	6	8.5	20	8.5	M6	3	M8	9	-	-	-	-	-	-	S_T	-
A1	1 2 3 4	20	6	8.5	20	8.5	M6	3	M8	9	-	-	-	-	-	-	S_T	-
A2 (1)	2 3 4	30	4	10.5	NA	NA	M8	8	M10	18	-	-	-	-	-	-	S_T	-
A3	3 4	40	10	11	40	11	M10	28	M10	18	-	-	-	-	-	-	-	S_T

(1) insulation of the switchboard door and insulating plate on the back of the circuit-breaker for use at Ue≥415 V mandatory

—
04 Terminal FCCuAl
—
05 Terminal FC-CuAl with cable
—
06 External terminal FCCuAl
—
07 External terminal FCCuAL with cable

—
04

—
05

—
06

—
07

—
Front terminals for copper aluminium cables - FCCuAl

			Cable [mm²]		Tightening torque [Hole dimension] and [Nm]				Lenght of Cable stripping	Terminal covers				Separators			
Type	**Assembly**	**Poles**	**Rigid**	**Flexible**	**Terminal**			**Cable or busbar**	**[mm]**	**2**	**7.5**	**50**	**60**	**50**	**80**	**100**	**200**
A0	Internal	3	1x1..25	1x2.5..25	M6	3	-	1-4mm²: 1Nm 5-25mm²: 3Nm	16	-	S_T (2)	R	-	-	-	-	-
A0	Internal	3	1x25..50	1x25..50	M6	3	-	3	16	-	S_T (2)	R	-	-	-	-	-
A1	Internal	1 2 3 4	1x1..25	1x2.5..25	M6	3	-	1-4mm²: 1Nm 5-25mm²: 3Nm	16	-	S_T (2)	R	-	S_{CB}	-	-	-
A1	Internal	1 2 3 4	1x25..50	1x25..50	M6	3	-	3	16	-	S_T (2)	R	-	S_{CB}	-	-	-
A2 (1)	Internal	2 3 4	1x50..150	1x70..120	M8	5	-	15	20	-	S_T (2)	-	R	-	S_{CB} (3)	-	-
A2 (1)	Internal	2 3 4	1x150..185	-	M8	5	-	20	22	-	S_T (2)	-	R	-	S_{CB} (3)	-	-
A3	Internal	3 4	1x185..300	-	M10	18	M16	43	23.5	R		-	R	-	-	S_{CB}	R
A3	External	3 4	2x95..240	-	M10	18	M22	31	30 1st cable / 70 2nd cable	-		S_T		-	-	-	-

(1) insulation of the switchboard door and insulating plate on the back of the circuit-breaker for use at Ue≥415 V mandatory
(2) In FCCuAl terminal kit 1pc and 2pcs the terminal covers are not provided
(3) Only for 2P version

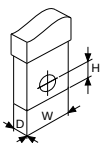

W = Width
H = Hole height
D = Depth
ø = Diameter
R = On request
S_{CB} = Supplied as standard with circuit-breaker, not available in the loose terminal kit
S_T = Supplied as standard with the terminal kit

Mechanical accessories and ordering codes

—
Front terminals - F

	1 piece	2 pieces	3 pieces	4 pieces	6 pieces	8 pieces
A0	1SDA066200R1	1SDA066201R1	1SDA066202R1	1SDA066203R1	1SDA066204R1	1SDA066205R1
A1	1SDA066200R1	1SDA066201R1	1SDA066202R1	1SDA066203R1	1SDA066204R1	1SDA066205R1
A2	1SDA066206R1	1SDA066207R1	1SDA066208R1	1SDA066209R1	1SDA066210R1	1SDA066211R1
A3	-	-	1SDA055012R1	1SDA055013R1	1SDA055010R1	1SDA055011R1

—
Front extended terminals - EF

	1 piece	2 pieces	3 pieces	4 pieces	6 pieces	8 pieces
A0	1SDA066212R1	1SDA066213R1	1SDA066214R1	1SDA066215R1	1SDA066216R1	1SDA066217R1
A1	1SDA066212R1	1SDA066213R1	1SDA066214R1	1SDA066215R1	1SDA066216R1	1SDA066217R1
A2	1SDA066218R1	1SDA066219R1	1SDA066220R1	1SDA066221R1	1SDA066222R1	1SDA066223R1
A3	-	-	1SDA055036R1	1SDA055037R1	1SDA055034R1	1SDA055035R1

—
Front extended spread terminals - ES

	1 piece	2 pieces	3 pieces	4 pieces	6 pieces	8 pieces
A0	-	1SDA066224R1	1SDA066225R1	1SDA066226R1	1SDA066227R1	1SDA066228R1
A1	-	1SDA066224R1	1SDA066225R1	1SDA066226R1	1SDA066227R1	1SDA066228R1
A2	-	1SDA066229R1	1SDA066230R1	1SDA066231R1	1SDA066232R1	1SDA066233R1
A3	-	-	1SDA055040R1	1SDA055041R1	1SDA055038R1	1SDA055039R1

—
Front terminals for copper aluminum cables — FC CuAl

	1 piece	2 pieces	3 pieces	4 pieces	6 pieces	8 pieces
A0 1 x 1...25 mm^2	1SDA066234R1	1SDA066235R1	1SDA066236R1	1SDA066237R1	1SDA066238R1	1SDA066239R1
A0 1 x 25...50 mm^2	1SDA066240R1	1SDA066241R1	1SDA066242R1	1SDA066243R1	1SDA066244R1	1SDA066245R1
A1 1 x 1...25 mm^2	1SDA066234R1	1SDA066235R1	1SDA066236R1	1SDA066237R1	1SDA066238R1	1SDA066239R1
A1 1 x 25...50 mm^2	1SDA066240R1	1SDA066241R1	1SDA066242R1	1SDA066243R1	1SDA066244R1	1SDA066245R1
A2 1 x 50...150 mm^2 (2)	1SDA066246R1	1SDA066247R1	1SDA066248R1	1SDA066249R1	1SDA066250R1	1SDA066251R1
A2 1 x 150...185 mm^2 (2)	1SDA066252R1	1SDA066253R1	1SDA066254R1	1SDA066255R1	1SDA066256R1	1SDA066257R1
A3 1 x 185...300 mm^2	-	-	1SDA055024R1	1SDA055025R1	1SDA055022R1	1SDA055023R1
A3 2 x 95...240 mm^2	-	-	1SDA055032R1	1SDA055033R1	1SDA055030R1	1SDA055031R1

(1) 4-pole circuit-breakers only
(2) If terminals are mounted on top of circuit-breaker, Icu=50% and Ics=Icu

High terminal cover (HTC)

Low terminal cover (LTC)

Sealable screw

Phase separators (PS)

Terminal covers, phase separators and sealable screws

Both high (HTC) and low (LTC) terminal covers are applied to the circuit-breaker to avoid accidental contact with live parts and, in this way, to ensure protection against direct contact. The terminal covers are pre-punched for knock-out on the front to facilitate installation of busbars and/or cables, providing correct insulation.

The phase separator partitions (PS) allow the insulation characteristics between phases to be increased near the connections. They are mounted on the front by inserting them into the corresponding slots and can be applied either prior to or when the circuit-breaker is already installed. The phase separators are incompatible with both the high and the low terminal covers.

The lead sealing kit includes screws, which, when used, prevent removal of the terminal covers and/or circuit-breaker fronts, acting as a protection against direct contact and tampering. The screws can be locked with a wire and sealed with lead.

The compulsory and optional phase separators and terminal covers needed for correct installation and insulation of the circuit-breaker are indicated in the "Connection terminals" section of the "Accessories" Chapter and in the "Overall dimensions" Chapter.

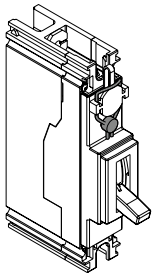

Sealable screw onto the circuit-breaker front

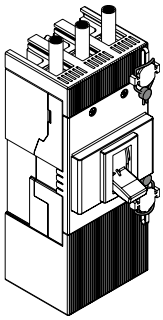

Sealable screw onto the terminal covers

Terminal covers

	A0	A1		A2		A3	
	3 poles	**3 poles**	**4 poles**	**3 poles**	**4 poles**	**3 poles**	**4 poles**
HTC 60mm	-	-	-	1SDA066186R1	1SDA066189R1	1SDA054960R1	1SDA054961R1
HTC 50mm	1SDA066190R1	1SDA066190R1	1SDA066185R1	-	-	-	-
LTC 7.5mm	1SDA066181R1	1SDA066181R1	1SDA066182R1	1SDA066183R1	1SDA066184R1	-	-
LTC 2mm	-	-	-	-	-	1SDA054968R1	1SDA054969R1
Sealable screws for terminal cover	1SDA066673R1	1SDA066673R1	-	1SDA066673R1	-	1SDA051504R1	-
Sealable screws for front	1SDA068214R1	1SDA068214R1	-	1SDA068214R1	-	-	-

Phase separators

	A0	A1			A2			A3	
	2 pieces	**2 pieces**	**4 pieces**	**6 pieces**	**2 pieces**	**4 pieces**	**6 pieces**	**4 pieces**	**6 pieces**
PS 50mm	1SDA066191R1	1SDA066191R1	1SDA066194R1	1SDA066197R1	-	-	-	-	-
PS 80mm	-	-	-	-	1SDA066192R1	1SDA066195R1	1SDA066198R1	-	-
PS 100mm	1SDA066193R1	1SDA066193R1	1SDA066196R1	1SDA066199R1	1SDA066193R1	1SDA066196R1	1SDA066199R1	1SDA054970R1	1SDA054971R1
PS 200mm	-	-	-	-	-	-	-	1SDA054972R1	1SDA054973R1

Mechanical accessories and ordering codes

—
Direct handle (RHD)

—
Extended handle (RHE)

Rotary handle operating mechanism
Rotary handle operating mechanism is a control device which allows the circuit-breaker to be operated by means of a rotary handle, which facilitates circuit-breaker opening and closing thanks to its ergonomic handgrip.
There are two types of handle:
- direct (RHD): installed directly on the front of the circuit-breaker;
- extended (RHE): installed through the switchboard door, interacts with the circuit-breaker behind the door by means of a transmission rod.

The rotary handles, in the direct and extended version, are available for the three-pole and four-pole A0 (3p only), A1, A2 and A3 circuit-breakers both in the standard version (grey) and in the emergency version (red on a yellow background) suitable for controlling machine tools.
Information/settings visible and accessible to the user:
- Circuit-breaker nameplate
- Indication of the 3 positions: open (OFF), closed (ON), tripped (TRIP)
- Access to the test pushbutton of the rotary handle release (RHD only).

Rotary handle operating mechanisms can be ordered:
- By using the pre-configured “kit” code (RHD and RHE)
- By ordering the following three devices (only RHE):
  - Rotary handle on door of the compartment: Standard (RHE_H) or emergency (RHE_H_EM)
  - Transmission rod of 500 mm (RHE_S); the minimum and maximum distances between the mounting surface and the door are 62.5 mm and 479.5 mm.
  - Base for circuit-breaker (RHE_B).

It is possible to equip the handles with a wide range of key locks and padlocks. Each rotary handle takes up to 3 padlocks (7 mm Ø stem). (See the “Key locks” paragraph in the "Accessories" Chapter.) The direct and extended rotary handles allow use of the early auxiliary contacts on closing in order to supply the undervoltage release in advance, before closing of the main circuit-breaker contacts (see the “Early auxiliary contacts” paragraph in the "Accessories" Chapter).

—
Rotary handle

	A0-A1-A2	A3
RHD - Operating mechanism direct handle	1SDA066154R1	1SDA066155R1
RHD EM - Operating mechanism emergency direct handle	1SDA066156R1	1SDA066157R1
RHE - Operating mechanism extended handle	1SDA066158R1	1SDA066159R1
RHE EM - Operating mechanism emergency extended handle	1SDA066160R1	1SDA066161R1
RHE_S - Rod extended handle	1SDA066164R1	1SDA068952R1
RHE_B - Base extended handle	1SDA066162R1	1SDA066163R1
RHE_H - Extended handle	1SDA066165R1	1SDA066167R1
RHE_H_EM - Emergency extended handle	1SDA066166R1	1SDA066168R1

—
Front for lever operating mechanism (FLD)

Front for lever operating mechanism
Device which can be installed on the front of the circuit-breaker, allowing the circuit-breaker to be locked with keys and padlocks. The front for the lever operating mechanism can only be installed on A3 circuit-breakers in 3- and 4-pole versions. It is possible to lock the front for lever operating mechanism by means of a vast range of key locks and padlocks (See the “Locks” paragraph in the "Accessories" Chapter).

—
Front for lever operating mechanism

	A3
FLD - Front for lever operating mechanism	1SDA066179R1

Fixed padlock in open position (PLL)

Fixed padlock in open and closed position (PLL)

Removable padlock in open position (PLL)

Key locks

Key locks are devices (with padlocks or keys) which prevent the circuit-breaker closing or opening operation. They can be applied:

- Directly onto the front of the circuit-breaker
- Onto the direct/extended rotary handle operating mechanism
- Onto the front for lever operating mechanisms.

Locking the circuit-breaker in the open position ensures isolation of the circuit according to the IEC 60947-2 Standard. Locking in closed position does not prevent release of the mechanism following a fault.

The PLL unremovable version for circuit-breaker, when it is locked in open position, does not provide access to all the dismounting screws of the device itself.

Type of lock		Circuit-breaker	Polarity	Optional/ Standard Supply	CB lock position	Type of Lock	Withdrawability of key
Circuit-breaker	PLL- Fixed padlock	A0-A1-A2	3, 4	Optional	OPEN-CLOSED	Padlocks-max 3 padlocks Ø stem 7mm (not supplied)	-
	PLL- Fixed padlock	A0-A1-A2	3, 4	Optional	OPEN	Padlocks-max 3 padlocks Ø stem 7mm (not supplied)	-
	PLL- Removable padlock	A0-A1-A2 (1)	1, 2, 3, 4,	Optional	OPEN	Padlocks-max 3 padlocks Ø stem 7mm (not supplied)	-
	PLL- Unremovable padlock	A1	1	Optional	OPEN	Padlocks-max 1 padlock Ø stem 4-5mm (not supplied)	-
	PLL- Unremovable padlock	A1-A2	3, 4	Optional	OPEN	Padlocks-max 1 padlock Ø stem 4-5mm (not supplied)	-
Rotary handle direct and extended	Padlock in open position	A1-A2-A3	3, 4	Standard	OPEN	padlocks-max 3 padlocks Ø stem 7mm (not supplied)	-
	Compartment door key lock	A1-A2-A3	3, 4	Standard	CLOSED	Door lock (2)	-
	RHL-S key lock in open pos.	A1-A2-A3	3, 4	Optional	OPEN	Same Ronis keys	OPEN
	RHL-D key lock in open pos.	A1-A2-A3	3, 4	Optional	OPEN	Different Ronis keys	OPEN
	RHL-D key lock in open and closed position	A1-A2	3, 4	Optional	OPEN-CLOSED	Different Ronis keys	OPEN/CLOSED
Front for lever operating mechanism	Padlock in open position	A3	3, 4	Standard	OPEN	padlocks-max 3 padlocks Ø stem 6mm (not supplied)	-
	Compartment door lock	A3	3, 4	Standard	CLOSED	Door lock	-
	RHL-D Lock with key in open pos.	A3	3, 4	Optional	OPEN	Different Ronis keys	OPEN
	RHL-S Lock with key in open pos.	A3	3, 4	Optional	OPEN	Same Ronis keys	OPEN

(1) A0 is available in 3-pole version only. A2 is not available in 1-pole version.
(2) Function can be completely excluded by the Customer during assembly of the handle (A0, A1 and A2)

Mechanical accessories and ordering codes

—
Circuit-breaker with fixed padlock in open position

—
Circuit-breaker with fixed padlock in open and closed position

—
Unremovable padlock in open position, 1 pole

—
Unremovable padlock in open position, 3 and 4 poles

—
Key lock for direct handle

—
Key lock for extended rotary handle

—
Key lock for front for lever operating mechanism

—
Padlocks for lever operating mechanism of the circuit-breaker

	A1–A2
PLL — Padlocks removable in open position	1SDA066259R1
PLL — Padlocks fixed in open position	1SDA066171R1
PLL — Padlocks fixed in open and closed position	1SDA066172R1
PLL — A1 unremovable padlock device in open position 1p	1SDA069881R1
PLL — A0-A1-A2 unremovable padlock device in open position 3p-4p	1SDA069882R1

—
Key lock on handle and front for lever operating mechanism

	A1-A2	A3
RHL-D Key lock in open position, different keys	1SDA066173R1	1SDA054939R1
RHL-S Key lock in open position, same keys type A	1SDA066174R1	1SDA054940R1
RHL-S Key lock in open position, same keys type B	1SDA066175R1	1SDA054941R1
RHL-S Key lock in open position, same keys type C	1SDA066176R1	1SDA054942R1
RHL-S Key lock in open position, same keys type D	1SDA066177R1	1SDA054943R1
RHL-D Key lock in open/closed position different keys	1SDA066178R1	-

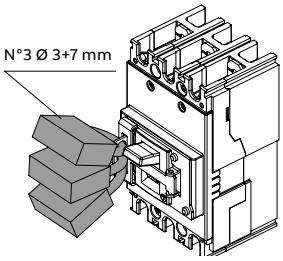

Fixed padlock in open/closed position

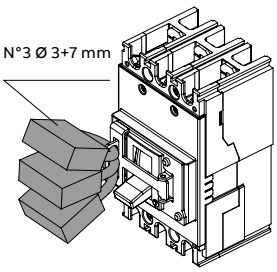

Fixed padlock in open/closed position

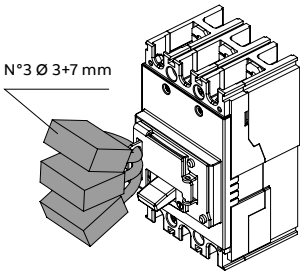

Fixed padlock in open position

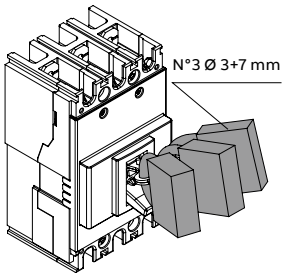

Removable padlock in open position

Bracket for DIN rail

Brackets for mounting on DIN rail
The bracket, applied on the back of the circuit-breakers, allows installation on a standardized DIN EN 50022 rail so as to simplify mounting in standard installations.

The bracket for mounting on DIN rail can be used with the following SACE FORMULA DSA circuit-breakers:
- A0 in 3p version
- A1 in 1p, 2p, 3p version
- A2 in 2p, 3p, 4p version.

Bracket for fixing on DIN rail

	A1	A2
Bracket for 1p, 2p, 3p and 4p	1SDA066180R1	-
Bracket for 2p, 3p and 4p	-	1SDA066180R1

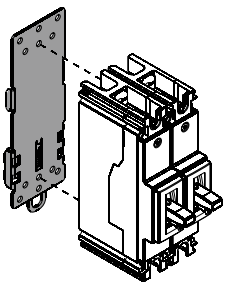

Bracket for DIN rail for 1p circuit-breaker

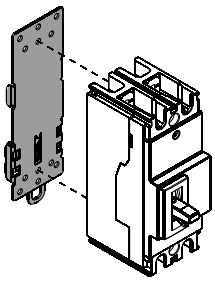

Bracket for DIN rail for 2p circuit-breaker

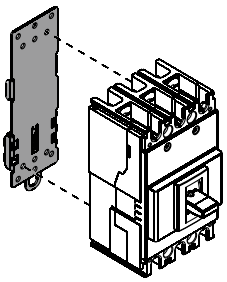

Bracket for DIN rail for 3p circuit-breaker

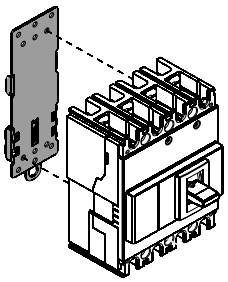

Bracket for DIN rail for 4p circuit-breaker

Electrical accessories and ordering codes

—
Cabled service release SOR-C and UVR-C

Service releases
The cabled shunt opening release SOR-C allows for opening of the circuit-breaker by means of a non-permanent electrical control. Operation of the release is guaranteed for a voltage between 70% and 110% of the power supply rated voltage value Un, in both alternating and direct current. It is fitted with an integrated limit contact for cutting off the power supply. The SOR-C mechanical life is 10% of the corresponding circuit-breaker.

The cabled undervoltage release UVR-C ensures circuit-breaker opening for lack/lowering of the release power supply voltage. Opening is guaranteed when the voltage is between 70% and 35% of Un as specified in the Standard. After tripping, the circuit-breaker can be closed again starting from a voltage higher than 85% of Un. With the undervoltage release de-energised, it is impossible to close the circuit-breaker and/or the main contacts. The UVR-C mechanical life is 10% of the corresponding circuit-breaker.

The service releases SOR-C and UVR-C for A0, A1, A2 and A3 which can be mounted as an alternative between each other, are only available in the cabled version (20 AWG cable section/0.5mm^2), with free cables 1 m long. For A1 and A2, screw-less snap-on assembly is carried out in the special slot of the circuit-breaker. In the following circuit-breakers:

- two-pole (A1, A2), the SOR-C or UVR-C can be mounted as an alternative in the right-hand slot;
- three-pole (A0, A1, A2, A3), the SOR-C or UVR-C can be mounted as an alternative in the left-hand slot;
- four-pole (A1,A2,A3), the SOR-C or UVR-C can be housed as an alternative, in the slot of the third pole.

—
SOR-C - Electrical characteristics

	A0 - A1 - A2		A3	
Versions	**AC [VA]**	**DC [W]**	**AC [VA]**	**DC [W]**
12 VDC		50		150
24...30 VAC/DC	50...65	50...65	130...180	130...180
48...60 VAC/DC	60	60	130...180	130...180
110...127 VAC - 110...125 VDC	50	50	120...150	120...150
220...240 VAC - 220...250 VDC	50...60	50...60	100...150	100...150
380...440 VAC	55		130...180	
480...525 VAC*	55		150	

* A3 up to 500 VAC

—
UVR-C - Electrical characteristics

	A0 - A1 - A2		A3	
Versions	**AC [VA]**	**DC [W]**	**AC [VA]**	**DC [W]**
24...30 VAC/DC	1.5	1.5	3	3
48 VAC/DC	1	1	3	3
60 VAC/DC	1	1	3	3
110...127 VAC - 110...125 VDC	2	2	3	3
220...240 VAC - 220...250 VDC	2.5	2.5	3	3
380...440 VAC	3		3	
480...525 VAC*	4		3	

* A3 up to 500 VAC

—

Shunt opening release – SOR-C

Cabled version	A0 - A1 - A2	A3
SOR-C 12 VDC	1SDA066133R1	1SDA054869R1
SOR-C 24...30 VAC/DC	1SDA066134R1	1SDA054870R1
SOR-C 48...60 VAC/DC	1SDA066135R1	1SDA054871R1
SOR-C 110...127 VAC - 110...125 VDC	1SDA066136R1	1SDA054872R1
SOR-C 220...240 VAC - 220...250 VDC	1SDA066137R1	1SDA054873R1
SOR-C 380...440 VAC	1SDA066138R1	1SDA054874R1
SOR-C 480...525 VAC*	1SDA066141R1	1SDA054875R1

* A3 up to 500 VAC

—

Undervoltage release – UVR-C

Cabled version	A0 - A1 - A2	A3
UVR-C 24...30 VAC/DC	1SDA066143R1	1SDA054887R1
UVR-C 48 VAC/DC	1SDA066144R1	1SDA054888R1
UVR-C 60 VAC/DC	1SDA067114R1	1SDA054889R1
UVR-C 110...127 VAC - 110...125 VDC	1SDA066145R1	1SDA054890R1
UVR-C 220...240 VAC - 220...250 VDC	1SDA066146R1	1SDA054891R1
UVR-C 380...440 VAC	1SDA066147R1	1SDA054892R1
UVR-C 480...525 VAC*	1SDA066148R1	1SDA054893R1

* A3 up to 500 VAC

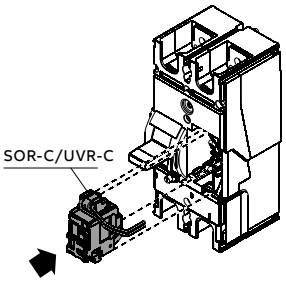

Two-pole circuit-breaker

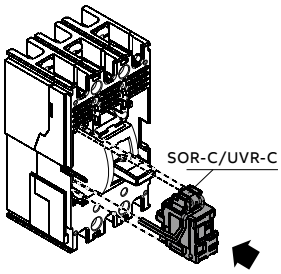

Three-pole circuit-breaker

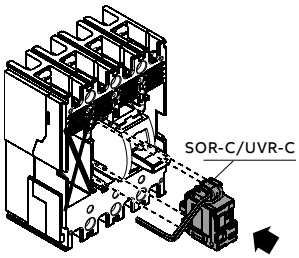

Four-pole circuit-breaker

Electrical accessories and ordering codes

Cabled auxiliary contact

Auxiliary contacts for electrical signals
The auxiliary contacts allow information about the state of the circuit breaker to be available through an electronic signal to another apparatus.
The signals available are as follows:

- open/closed: signalling the position of the circuit-breaker power contacts (Q);
- release trip: signalling circuit-breaker opening due to tripping of the thermal-magnetic or electronic trip unit (due to overload or short-circuit), of the opening of undervoltage release SOR-C or UVR-C, or by activation of the test pushbutton (SY).

Auxiliary contacts AUX-C Q, AUX-C SY
Installation of the auxiliary contacts for A0, A1 and A2 (at 250 VAC/DC) snap-on in the special slot of the circuit-breaker without the of use any screws. All the auxiliary contacts are supplied in the cabled version (20 AWG cable section/0.5mm2), with loose cables 1 m long. The combinations of auxiliary contacts available, vary according to the circuit-breaker. In particular, in the following circuit-breakers:

- two-pole, the 1Q+1SY (for A1) and 2Q+1SY (for A2) combination is available;
- three-pole and four-pole, the 1Q+1SY and 2Q+1SY (for A0, three-pole only, A1 and A2), and 1Q+1SY or 3Q+1SY (for A3) combination is available.

An AUX-C contact is also available as spare part and it can be used as Q or SY according to the slot of the circuit- breaker in which it is inserted.

AUX-C - Electrical characteristics

Power supply voltage	Operating current according to the utilization category (IEC 60947-5-1)					
(V)	AC-12	AC-13	AC-14	AC-15	DC-12	DC-14
125V AC	6 A	6 A	6 A	5 A	-	-
250V AC	6 A	6 A	6 A	4 A	-	-
110V DC	-	-	-	-	0.5 A	0.05 A
250V DC	-	-	-	-	0.3 A	0.03 A

Auxiliary contacts – AUX-C

	A0	A1		A2		A3
	3 poles	2 poles	3-4 poles	2 poles	3-4 poles	3-4 poles
Cabled version (numbered cables)						
AUX-C 1Q + 1SY 250 VAC/DC	1SDA066149R1	1SDA066151R1	1SDA066149R1	-	1SDA066149R1	1SDA054910R1
AUX-C 2Q + 1SY 250 VAC/DC	1SDA066150R1	-	1SDA066150R1	1SDA066152R1	1SDA066150R1	-
AUX-C 3Q + 1SY 250 VAC/DC	-	-	-	-	-	1SDA054911R1
Cabled version (spare parts)						
AUX-C	1SDA066258R1	1SDA066258R1	1SDA066258R1	1SDA066258R1	1SDA066258R1	-

—
Early auxiliary contact

Early auxiliary contacts AUE-C
The cabled early auxiliary contacts (AUE-C) are normally open contacts; they allow the undervoltage release to be supplied in advance, before the main contacts close, in compliance with the IEC 60204-1, VDE 0113 Standards.

It is possible to insert up to two early auxiliary contacts on closing inside the direct and extended rotary handle operating mechanism for circuit-breakers A0 (three-pole only), A1 and A2 in the three-pole and four-pole version. The contacts, supplied in the cabled version, with cables 1 m long (20 AWG cable section/0.5mm^2), must be ordered in combination with an undervoltage release.

—
AUE-C - Electrical characteristics

Voltage [V]	Current [A]	
	AC	DC
125 DC	-	0.5
250 AC/DC	12	0.3
400 AC	3	-

—
Early auxiliary contacts – AUE-C

	A0	A1-A2	A3
AUE-C	1SDA066153R1	1SDA066153R1	1SDA054925R1

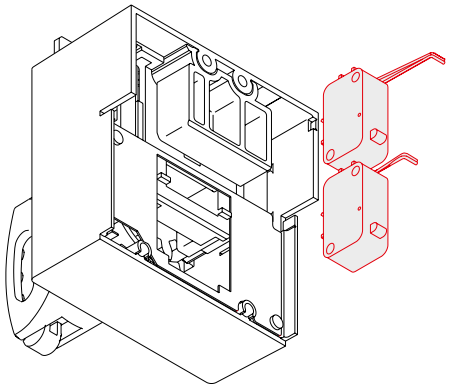

FORMULA Link

FORMULA Link is a component of a power distribution system which divides the main power supply over different loads. FORMULA Link is characterized on the supply side by a main circuit-breaker which protects the whole distribution system, and on the load side by smaller sized circuit-breakers, dedicated to single loads.
All the copper components are tin plated. FORMULA link has been realized in accordance with IEC 61439 Standard.

Loose components

Outgoing kit connection protection

Protection for the compartment door

FORMULA Link main busbar

Incoming kit connections

Circuit-breakers fixing rail

Phase separators

Outgoing kit connections

Busbar holder

Hammer head screw

FORMULA Link Systems

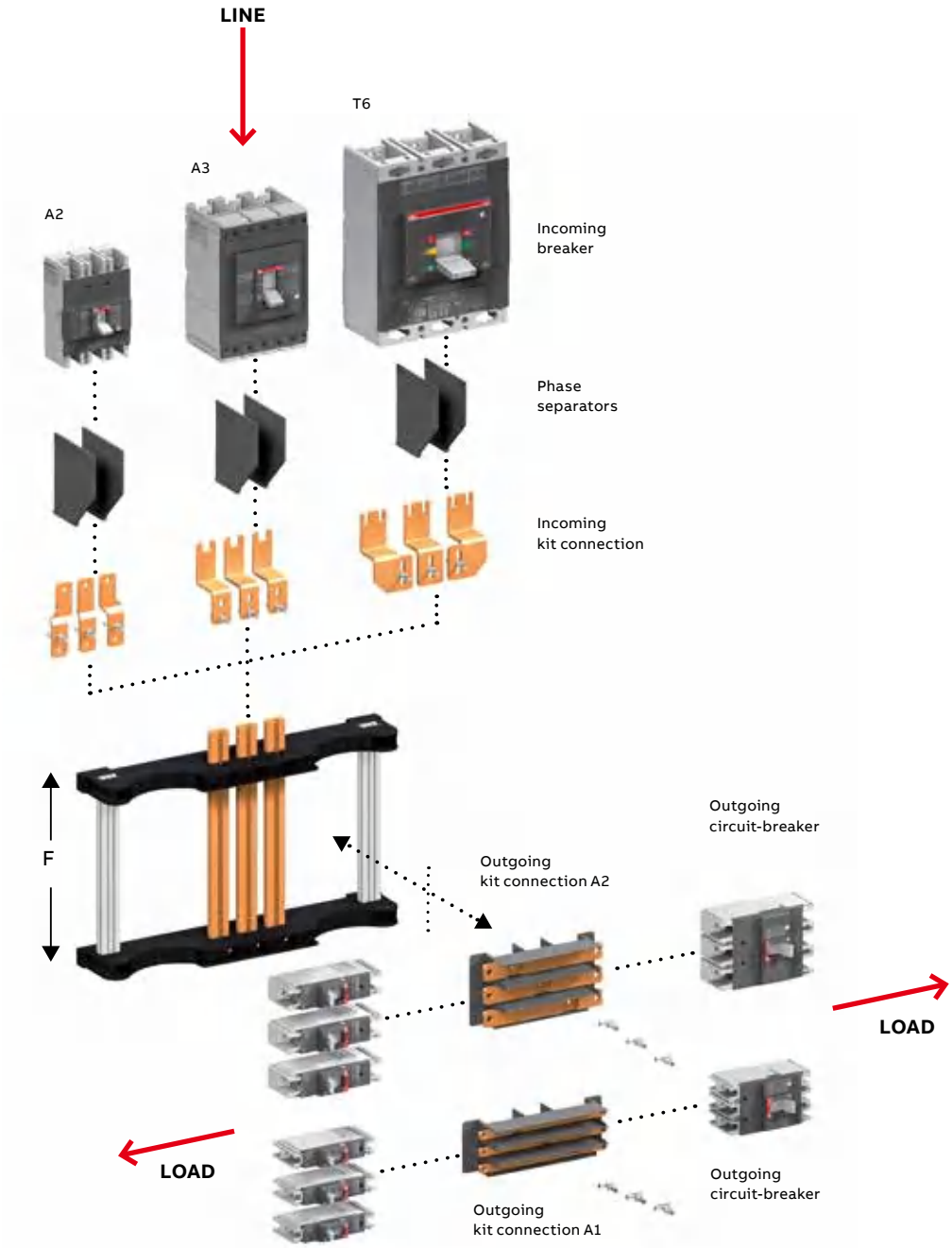

FORMULA Link
useful length:
F1 = 154mm;
F2 = 230.5mm
F3 = 307.5mm;
F4 = 384mm
F5 = 461mm

FORMULA Link

Three different frames of FORMULA Link are available according to the incoming current of the system:

- 250A FORMULA Link, usable with SACE FORMULA DSA A2 circuit-breaker as incoming breaker;
- 400A FORMULA Link, usable with SACE FORMULA DSA A3 circuit-breaker as incoming breaker;
- 630/800A FORMULA Link, usable with SACE Tmax T6 circuit breaker up 800A as incoming breaker.

—
FORMULA Link - Mechanical characteristics

FORMULA Link frame	**[A]**	**250**					**400**					**630/800**				
Length		**F1**	**F2**	**F3**	**F4**	**F5**	**F1**	**F2**	**F3**	**F4**	**F5**	**F1**	**F2**	**F3**	**F4**	**F5**
Number of outgoing circuit-breaker (SACE FORMULA DSA A1)	1p	12	18	24	30	36	12	18	24	30	36	12	18	24	30	36
	2p	6	8	12	14	18	6	8	12	14	18	6	8	12	14	18
	3p	4	6	8	10	12	4	6	8	10	12	4	6	8	10	12

—
FORMULA Link - Electrical characteristics

FORMULA Link frame	**[A]**	**250**	**400**	**630/800**
Incoming Breaker		A2	A3	T6
Outgoing Breaker		A1	A1-A2	A1-A2
Rated Operational Voltage 50/60 Hz	[V]	550 AC	550 AC	550 AC
Rated Insulation Voltage	[V]	690 AC	690 AC	690 AC
Rated Short Time Withstand Current (1s)	[kA]	30	40	40

—
Incoming kit connections for SACE FOMULA DSA A2

—
Incoming kit connections for SACE FOMULA DSA A3

—
Incoming kit connections for SACE Tmax T6

To connect the main circuit-breaker to the FORMULA Link, it is necessary to use the special incoming kit connections.
The connection kits change in relation to the incoming breaker choosen. They are available:

- for SACE FORMULA DSA A2 circuit-breaker;
- for SACE FORMULA DSA A3 circuit-breaker;
- for SACE Tmax T6 circuit-breaker;

It's possible to connect the cables directly to the FORMULA Link using the dedicated incoming kit connection for lugs (lugs not supplied).

Either SACE FORMULA DSA A1 (in the single-, two- and three-pole version) or A2 (in the two- and three pole version) circuit-breakers can be used for the protection of single loads. The outgoing circuit-breakers are connected onto the main FORMULA Link with connection kits composed of copper connections and thermoplastic bases which assure the alignment and insulation between the phases.
Two outgoing kit connections are available:

- kit for SACE FORMULA DSA A1 circuit-breakers;
- kit for SACE FORMULA DSA A2 circuit-breakers.

Having six connection terminals, each kit allows connection of two three-pole or of six single-pole circuit-breakers.

—
FOMULA Link

Each FORMULA Link frame is available in five different useful lengths for the assembling of the outgoing kit connections:

- F1: 154 mm;
- F2: 230.5 mm;
- F3: 307.5 mm;
- F4: 384 mm;
- F5: 461 mm.

The length of the FORMULA Link is related to the number and type of circuit-breakers A1 (in the single-, two-, and three-pole version) or A2 (in the two- and three-pole version) that have to be installed.
In the table below, all the possible combinations of three-pole outgoing circuit-breakers are shown. Starting from the number of outgoing ways required, it is possible to obtain the number of connection kits and the length of the FORMULA Link

Outgoing Ways		**Number of A1 outgoing kit connections**	**Number of A2 outgoing kit connections**	**Frame length**
Number A1 3p	**Number A2 3p**			
4	0	2	0	F1 [154 mm]
0	2	0	1	
6	0	3	0	F2 [230.5 mm]
2	2	1	1	
0	4	0	2	
8	0	4	0	F3 [307.5 mm]
4	2	2	1	
2	4	1	2	
10	0	5	0	F4 [384 mm]
6	2	3	1	
4	4	2	2	
0	6	0	3	
12	0	6	0	F5 [461 mm]
8	2	4	1	
6	4	3	2	
2	6	1	3	
0	8	0	4	

FORMULA Link
Ordering codes

During the ordering stage, it is necessary to specify the codes of the following components which are already preassembled:

- incoming kit connections according to the incoming current;
- outgoing kit connections according to the type and number of outgoing circuit-breakers (the code of the outgoing kit connection includes the base made of thermoplastic material, copper connections and hammer screws for fixing and six outgoing kit connection protections);
- FORMULA Link frame according to the length needed and the incoming current (the code includes: 3 main busbars, 2 busbar holder supports, 2 circuit-breaker fixing rails, screws, all ready to be assembled).

Incoming kit connections

Incoming kit connections A2	1SDA066822R1
Incoming kit connections A3	1SDA066823R1
Incoming kit connections T6	1SDA066824R1
Incoming kit connections FORMULA Link 630/800 for lugs 630/800A	1SDA068744R1
Incoming kit connections FORMULA Link 250 for lugs 250A	1SDA068839R1
Incoming kit connections FORMULA Link 400 for lugs 400A	1SDA068840R1

Outgoing kit connections

Outgoing kit connections A1	1SDA066841R1
Outgoing kit connections A2	1SDA066842R1

FORMULA Link frame (ready to be assembled)

	F1	F2	F3	F4	F5
FORMULA Link 250A for A1	1SDA066825R1	1SDA066827R1	1SDA066828R1	1SDA066829R1	1SDA066830R1
FORMULA Link 400A for A1-A2	1SDA066831R1	1SDA066832R1	1SDA066833R1	1SDA066834R1	1SDA066835R1
FORMULA Link 630/800A for A1-A2	1SDA066836R1	1SDA066837R1	1SDA066838R1	1SDA066839R1	1SDA066840R1

Loose components

Aluminium fixing bar L=1.2m	1SDA066847R1
Busbar holder	1SDA066843R1
Busbar 250A L=1.2m	1SDA066844R1
Busbar 400A L=1.2m	1SDA066845R1
Busbar 630/800A L=1.2m	1SDA066846R1
Hammer Head Screws (15 pieces)	1SDA066848R1
Phase separators kit (2 pieces)	1SDA067538R1
Protection for compartment door (2 pieces) L=465mm	1SDA067539R1
Kit protection A1 (15 pieces)	1SDA068740R1
Kit protection A2 (15 pieces)	1SDA068741R1

FORMULA Link
Examples of order

Example 1
Composition to be made
- Incoming breaker: A3 400A;
- Outgoing ways: four A1 3p.

Ordering code:
- 1SDA066823R1 (Quantity 1) - Incoming kit connections A3 400A;
- 1SDA066841R1 (Quantity 2) - Outgoing kit connections A1: each kit to be used for two SACE FORMULA DSA A1 3 poles;
- 1SDA066831R1 (Quantity 1) - Frame 400A, with a useful length F1=154mm.

Step 1: Selection of the incoming kit connections code.
Since as incoming breaker there is one 400A SACE FORMULA DSA circuit-breaker, it is necessary to order the proper kit of terminal useful to connect the FORMULA Link and the incoming breaker.

Incoming kit connection

Incoming kit connection A2	1SDA066822R1
Incoming kit connection A3	1SDA066823R1
Incoming kit connection T6	1SDA066824R1
Incoming kit connections FORMULA Link 630/800 for lugs 630/800A	1SDA068744R1
Incoming kit connections FORMULA Link 250 for lugs 250A	1SDA068839R1
Incoming kit connections FORMULA Link 400 for lugs 400A	1SDA068840R1

Step 2: Definition of the number of the necessary outgoing kit connection, according to the number of outgoing ways and defining length of the frame. To connect four SACE FORMULA DSA A2 3-poles circuit-breakers as outgoing ways, it is necessary to order two “outgoing kit connections A1” and the frame 630A with useful length “F3”.

Outgoing Ways		Number of A1 outgoing kit connections	Number of A2 outgoing kit connections	Frame length
Number A1 3p	Number A2 3p			
4	0	2	0	F1 [154 mm]
0	2	0	1	
6	0	3	0	F2 [230.5 mm]
2	2	1	1	
0	4	0	2	
8	0	4	0	F3 [307.5 mm]
4	2	2	1	
2	4	1	2	
10	0	5	0	F4 [384 mm]
6	2	3	1	
4	4	2	2	
0	6	0	3	
12	0	6	0	F5 [461 mm]
8	2	4	1	
6	4	3	2	
2	6	1	3	
0	8	0	4	

FORMULA Link
Examples of order

Outgoing kit connections

Outgoing kit connections A1	1SDA066841R1
Outgoing kit connections A2	1SDA066842R1

FORMULA Link frame (ready to be assembled)

	F1	F2	F3	F4	F5
FORMULA Link assembly 250A for A1	1SDA066825R1	1SDA066827R1	1SDA066828R1	1SDA066829R1	1SDA066830R1
FORMULA Link assembly 400A for A1-A2	1SDA066831R1	1SDA066832R1	1SDA066833R1	1SDA066834R1	1SDA066835R1
FORMULA Link assembly 630/800A for A1-A2	1SDA066836R1	1SDA066837R1	1SDA066838R1	1SDA066839R1	1SDA066840R1

Example 2
Composition to be made
- Incoming breaker: Tmax T6 630A;
- Outgoing ways: four A1 3p + two A2 3p.

Ordering code:
- 1SDA066824R1 (Quantity 1) - Incoming kit connections Tmax T6 630A;
- 1SDA066841R1 (Quantity 2) - Outgoing kit connections A1: each kit to be used for two SACE FORMULA DSA A1 3p;
- 1SDA066842R1 (Quantity 1) - Outgoing kit connections A2: each kit to be used for two SACE FORMULA DSA A2 3p;
- 1SDA066838R1 (Quantity 1) - Frame 630A, with a useful length F3=307.5mm.

Step 1: Selection of the incoming kit connection code.
Since as incoming breaker there is one 630A Tmax T6 circuit-breaker, it is necessary to order the proper kit of terminal useful to connect the FORMULA Link and the incoming breaker.

Incoming kit connection

Incoming kit connection A2	1SDA066822R1
Incoming kit connection A3	1SDA066823R1
Incoming kit connection T6	1SDA066824R1
Incoming kit connections FORMULA Link 630/800 for lugs 630/800A	1SDA068744R1
Incoming kit connections FORMULA Link 250 for lugs 250A	1SDA068839R1
Incoming kit connections FORMULA Link 400 for lugs 400A	1SDA068840R1

Step 2: Definition of the number of the necessary outgoing kit connections, according to the number of outgoing ways and defining the length of the frame. To connect four SACE FORMULA DSA A2 3-pole circuit-breakers as outgoing ways, it is necessary to order two "outgoing kit connections A1" and the frame 630A with useful length "F3".

Outgoing Ways		Number of A1 outgoing kit connections	Number of A2 outgoing kit connections	Frame length
Number A1 3p	Number A2 3p			
4	0	2	0	F1 [154 mm]
0	2	0	1	
6	0	3	0	F2 [230.5 mm]
2	2	1	1	
0	4	0	2	
8	0	4	0	F3 [307.5 mm]
4	2	2	1	
2	4	1	2	
10	0	5	0	F4 [384 mm]
6	2	3	1	
4	4	2	2	
0	6	0	3	
12	0	6	0	F5 [461 mm]
8	2	4	1	
6	4	3	2	
2	6	1	3	
0	8	0	4	

—

Outgoing kit connections

Outgoing kit connections A1	1SDA066841R1
Outgoing kit connections A2	1SDA066842R1

—

FORMULA Link frame (ready to be assembled)

	F1	F2	F3	F4	F5
FORMULA Link assembly 250A for A1	1SDA066825R1	1SDA066827R1	1SDA066828R1	1SDA066829R1	1SDA066830R1
FORMULA Link assembly 400A for A1-A2	1SDA066831R1	1SDA066832R1	1SDA066833R1	1SDA066834R1	1SDA066835R1
FORMULA Link assembly 630/800A for A1-A2	1SDA066836R1	1SDA066837R1	1SDA066838R1	1SDA066839R1	1SDA066840R1

Installation

4/2 **Temperature performance**

4/5 **Dissipated power**

4/6 **Special applications**
4/6 Use of direct current apparatus

4/7 **Characteristic curves**
4/7 Example of curve reading
4/9 Trip curves with thermal-magnetic trip units

4/12 **Specific let-through energy curves**

4/15 **Limitation Curves**

4/18 **Coordination tables - Back-up**
4/18 Notes for uses

4/19 **Coordination tables - Back-up**
4/19 MCCB - MCB (415V) / MCCB - MCCB (415V)

Temperature performance

All the SACE FORMULA DSA circuit-breakers can be used under the following environmental conditions:

- -25 °C +70 °C: range of temperature where the circuit-breaker is installed;
- -40 °C +70 °C: range of temperature where the circuit-breaker is stored.

The SACE FORMULA DSA circuit breaker has been designed to hold 100% In at 50°C without tripping in normal condition (except for A1 125A).
To determinate tripping time using time/current curves, use I t°C values indicated in the tables below.

SACE FORMULA DSA A0 circuit-breaker with thermal-magnetic trip unit TMF

In (A)	10 °C	20 °C	30 °C	40 °C	50 °C	60 °C	70 °C
5	6.5	6.1	5.8	5.4	5	4.8	4.5
10	12.9	12.2	11.5	10.8	10	9.6	9.0
15	19.4	18.4	17.3	16.2	15	14.4	13.5
16	20.7	19.6	18.5	17.3	16	15.3	14.4
20	24.6	23.5	22.4	21.2	20	19.2	18.0
25	29.2	28.2	27.2	25.9	25	24.0	22.5
30	36.8	35.3	33.6	31.8	30	28.8	27.0
32	39.3	37.6	35.9	33.9	32	30.7	28.8
40	46.7	45.2	43.5	41.5	40	38.3	36.0
50	58.3	56.5	54.3	51.9	50	47.9	45.0
60	70.0	67.8	65.2	62.2	60	57.5	54.0
63	73.5	71.2	68.5	65.4	63	60.4	56.7
70	81.7	79.1	76.1	72.6	70	67.1	63.0
80	91.0	88.5	85.6	82.1	80	76.7	72.0
90	102.4	99.6	96.3	92.4	90	86.3	81.0
100	116.7	113.0	108.7	103.7	100	95.9	90.0

SACE FORMULA DSA A1 circuit-breaker with thermal-magnetic trip unit TMF

In (A)	10 °C	20 °C	30 °C	40 °C	50 °C	60 °C	70 °C
5	6.5	6.1	5.8	5.4	5	4.8	4.5
10	12.9	12.2	11.5	10.8	10	9.6	9.0
15	19.4	18.4	17.3	16.2	15	14.4	13.5
16	20.7	19.6	18.5	17.3	16	15.3	14.4
20	24.6	23.5	22.4	21.2	20	19.2	18.0
25	29.2	28.2	27.2	25.9	25	24.0	22.5
30	36.8	35.3	33.6	31.8	30	28.8	27.0
32	39.3	37.6	35.9	33.9	32	30.7	28.8
40	46.7	45.2	43.5	41.5	40	38.3	36.0
50	58.3	56.5	54.3	51.9	50	47.9	45.0
60	70.0	67.8	65.2	62.2	60	57.5	54.0
63	73.5	71.2	68.5	65.4	63	60.4	56.7
70	81.7	79.1	76.1	72.6	70	67.1	63.0
80	91.0	88.5	85.6	82.1	80	76.7	72.0
90	102.4	99.6	96.3	92.4	90	86.3	81.0
100	116.7	113.0	108.7	103.7	100	95.9	90.0
125	146.6	139.8	132.6	125.0	116.9	108.3	98.8

—
SACE FORMULA DSA A2 circuit-breaker with thermal-magnetic trip unit TMF

In (A)	10 °C	20 °C	30 °C	40 °C	50 °C	60 °C	70 °C
125	161	153	144	135	125	114	102
150	184	176	168	159	150	138	126
160	196	188	179	169	160	148	135
175	215	206	196	185	175	160	144
200	246	235	224	212	200	183	165
225	290	276	260	243	225	205	184
250	323	306	289	270	250	228	204

—
SACE FORMULA DSA A3 circuit-breaker with thermal-magnetic trip unit TMF (special version 50°C)

In (A)	10 °C	20 °C	30 °C	40 °C	50 °C	60 °C	70 °C
300	393	372	350	326	300	272	241
400	516	490	462	432	400	365	327

—
SACE FORMULA DSA A3 circuit-breaker with thermal-magnetic trip unit TMF

In (A)	10 °C	20 °C	30 °C	40 °C	50 °C	60 °C	70 °C
320	368	350	335	320	305	285	263
400	465	442	420	400	380	355	325
500	620	580	540	500	450	400	345

The circuit-breaker fitted with electronic trip units does not undergo any variation in performance as the temperature varies, but in the case of temperatures exceeding +40°C, the used rated current must be reduced to protect the copper parts of the circuit-breaker.

—
SACE FORMULA DSA A3 circuit-breakers with electronic trip unit ELT LI

In [A]	35°C	40°C	45°C	50°C	55°C	60°C	65°C	70°C
630	630	630	630	580	555	529	502	478

Temperature performance

Using a circuit breaker A1 125A with In=70A, to define the tripping time for an overcurrent I=200A you have to calculate the multiplier of I_1.

—

Reference temperature 50°C (hot trip)

I=200A
I 50°C = 70A
I/I 50°C = 200A/70A = 2.86

2.86 is the multiplier of I_1 thank to which it is possible to define the tripping time at 50°C using the time/current curve.

A1 125A - TMF
In=70 A - Ambient temperature=50°C - hot trip

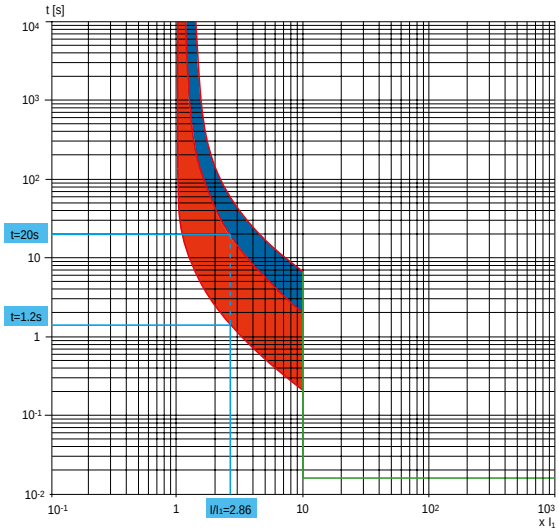

—

Reference temperature 40°C (hot trip)

I=200A
I 40°C = 72.6A
I/I 40°C = 200A/72.6A = 2.75

2.75 is the multiplier of I_1 thank to which is possible to define the tripping time at 40°C using the time/current curve.

A1 125A - TMF
In=70 A - Ambient temperature=40°C - hot trip

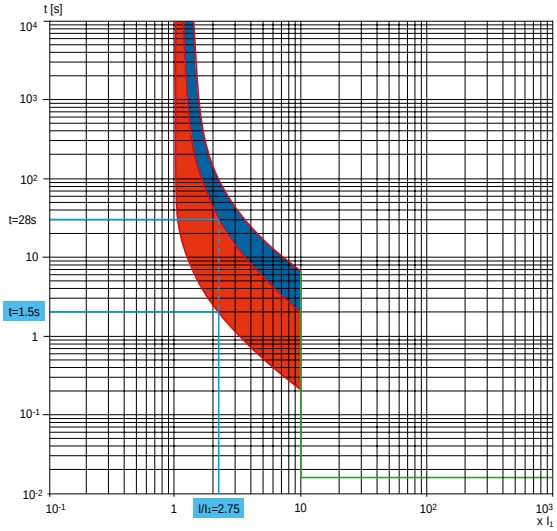

Dissipated power

For each circuit-breaker, the table below shows the dissipated power values for a single-pole circuit-breaker. The maximum total dissipated power of a two-pole or three-pole circuit-breaker used at 50/60 Hz is equal to the dissipated power for the single-pole multiplied by the number of poles.

Power [W/pole]	In [A]	A0	A1	A2	A3
TMF	15	2.5	2.5	-	-
	16	2.8	2.8	-	-
	20	3	3	-	-
	25	3	3	-	-
	30	4	4	-	-
	32	4	4	-	-
	40	4.5	4.5	-	-
	50	5.5	5.5	-	-
	60	6	6	-	-
	63	6	6	-	-
	70	8	8	-	-
	80	9	9	-	-
	90	7	7	-	-
	100	8	8	-	-
	125	-	11	7	-
	150	-	-	8	-
	160	-	-	9	-
	175	-	-	10	-
	200	-	-	12	-
	225	-	-	14	-
	250	-	-	16	-
	320	-	-	-	13.6
	400	-	-	-	19.5
	500	-	-	-	28.8
ELT LI	630	-	-	-	41

Special applications
Use of direct current apparatus

Variation in magnetic tripping
The thermal-magnetic trip units of the SACE FORMULA DSA circuit-breakers are suitable for use in direct current applications.
For the protection thresholds against short-circuits, correction values (Km) must be applied based on the distribution network type and to the number of poles to be connected in series (the thermal threshold does not undergo any alteration).
The correction value to be used can be found in the following tables.

Isolated network	
Un	**≤ 250**
Protection + Insulaion function	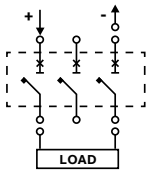
A1	2
A2	1.4
A3	1

Network with one grounded polarity	
Un	**≤ 250**
Protection function	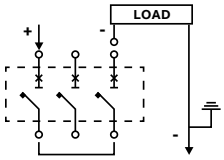
A1	2
A2	1.4
A3	1

Isolated network	
Un	**≤ 250**
Protection + Insulaion function	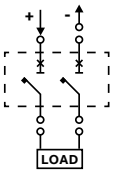
A1	2
A2	1.4

Network with one grounded polarity	
Un	**≤ 250**
Protection function	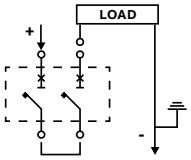
A1	2
A2	1.4

Characteristic curves
Example of curve reading

Example 1 – A2 250
Trip curves for power distribution (thermal-magnetic trip unit)
Let us consider a cicuit-breaker type A2 250In=200A. It can be noted that, on the basis of the conditions under which the overload occurs, i.e. with the circuit-breaker with thermal running or not, the time trip protection varies considerably.
For example for overload current $2xI_1$, the trip time is between 65.2s and 200s for cold trip and between 9.9s and 65.2s for hot trip.
For fault current values higher than 2000A the circuit-breaker trips instantaneously with the magnetic protection I_3.

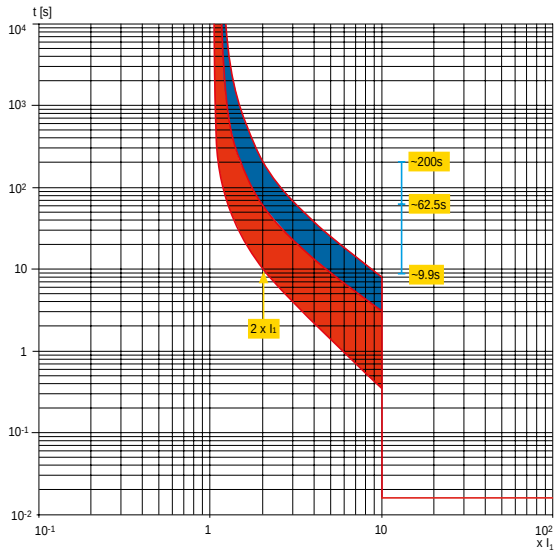

Example 2 – A1 125
Specific let-through energy curve
The following figure gives an example of reading the graph of the specific let-through energy curve of a circuit-breaker type A1 125 In=125A circuit-breaker at a voltage of 400V/415V.
The prospective symmetrical short-circuit current is indicated on the x-axis, whereas the value of the specific let-through energy expressed in A^2s is shown on the y-axis.
In correspondence with a short-circuit current value of 20kA, the circuit-breaker lets through a value of $I^2 t$ equal to 0.70x10^6xA^2 s.

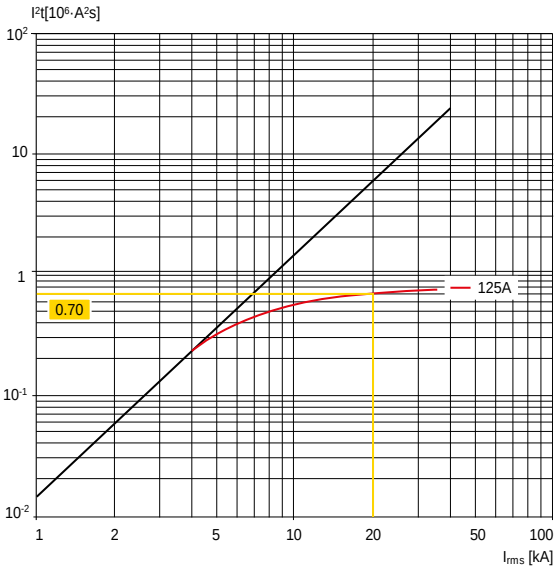

Characteristic curves
Example of curve reading

Example 3 – A1 125
Limitation curves
The following figure gives the trend of the limiting curve of a circuit-breaker type A1 125 In=125A. The r.m.s. value of the prospective symmetrical short-circuit current is given on the x-axis, whereas the peak value of the short-circuit current is indicated on the y-axis.
The limiting effect can be assessed by comparing, at the same value of symmetrical short-circuit current, the peak value corresponding to the prospective short-circuit current (curve A) with the peak value limited (curve B). The circuit-breaker A1 125 with thermal-magnetic trip unit In = 125A at a voltage of 400V/415V, for a fault current of 20kA limits the prospective short-circuit peak current to 15kA, with a reduction compared with the peak value of the prospective short-circuit current of 25kA.

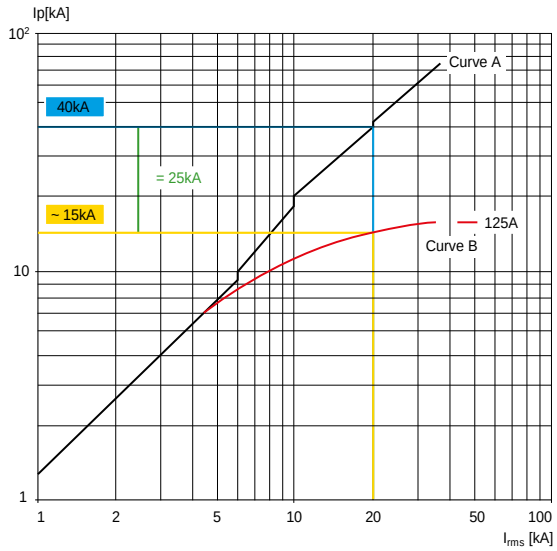

Characteristic curves

Trip curves with thermal-magnetic trip units

A0 100A - TMF
In=30÷63 A
I_3=400A for In<40A
I_3 =10xIn for In≥40A

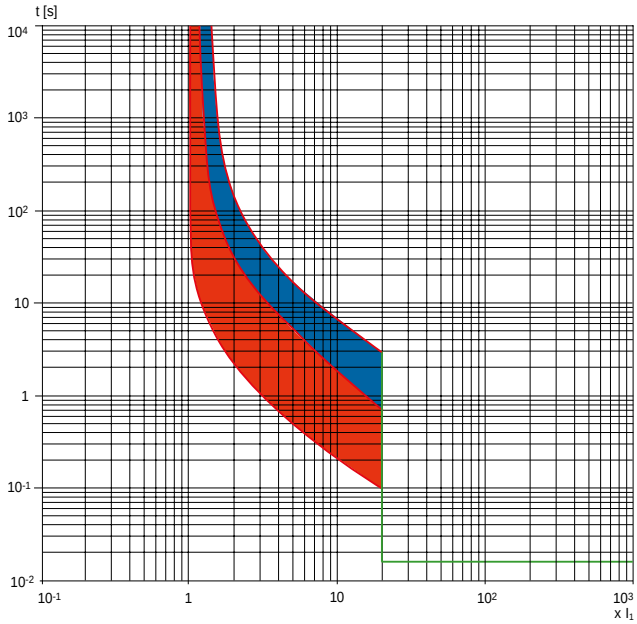

A0 100A - TMF
In=80÷100 A
I_3=10xIn

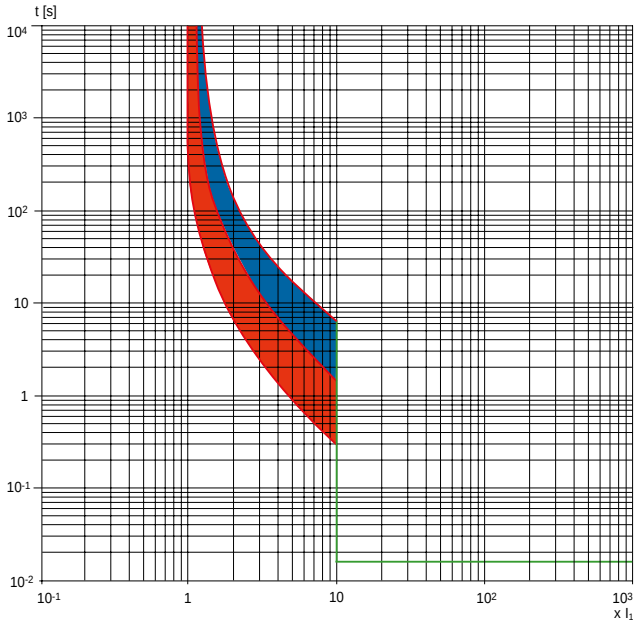

A1 125A - TMF
In=15÷70 A
I_3=400A for In<40A
I_3=10xIn for In≥40A

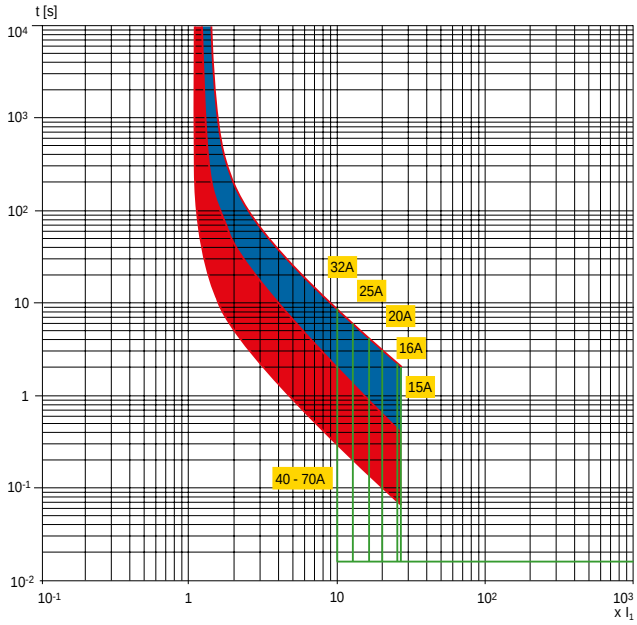

A1 125A - TMF
In=80÷100 A
I_3=10xIn

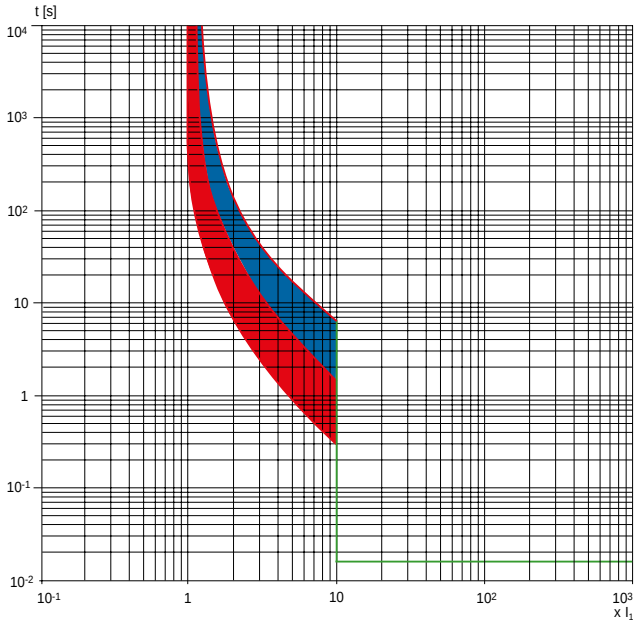

Characteristic curves

Trip curves with thermal-magnetic trip units

A1 125A - TMF
In=125 A
I_3=10xIn

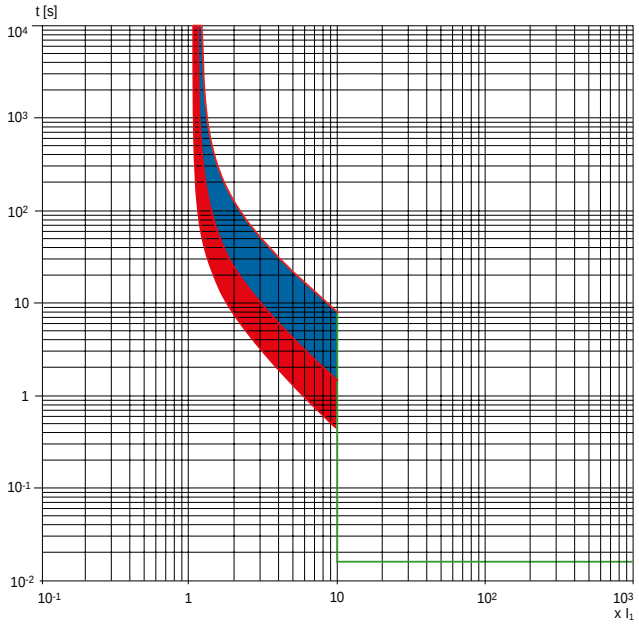

A2 250A - TMF
In=125÷250 A
I_3=10xIn

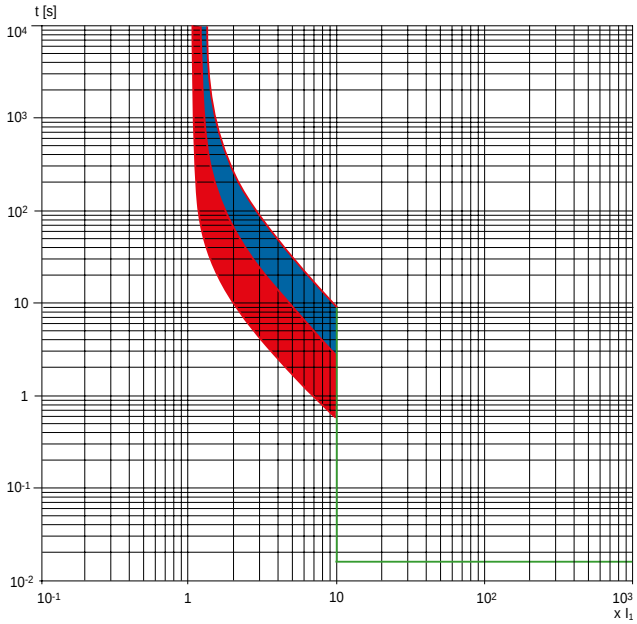

A3 630A - TMF
In=320÷500 A
I_3=10xIn

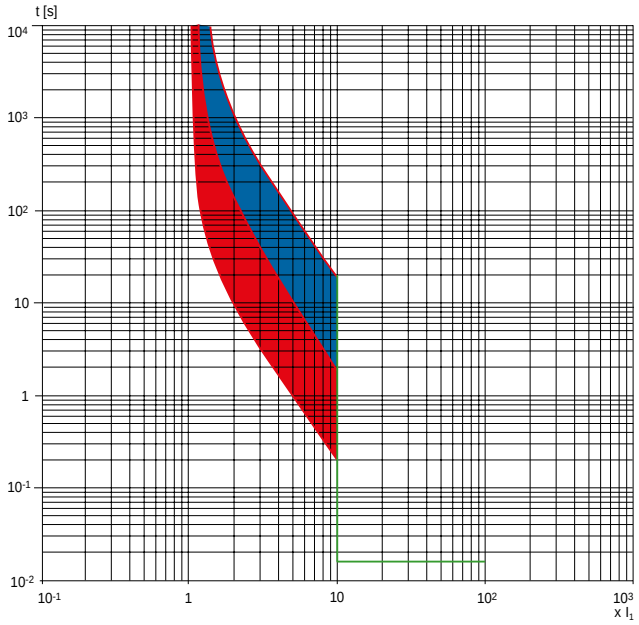

A3 630A - TMF
Special version 50°C
In=300÷400 A
I_3=10xIn

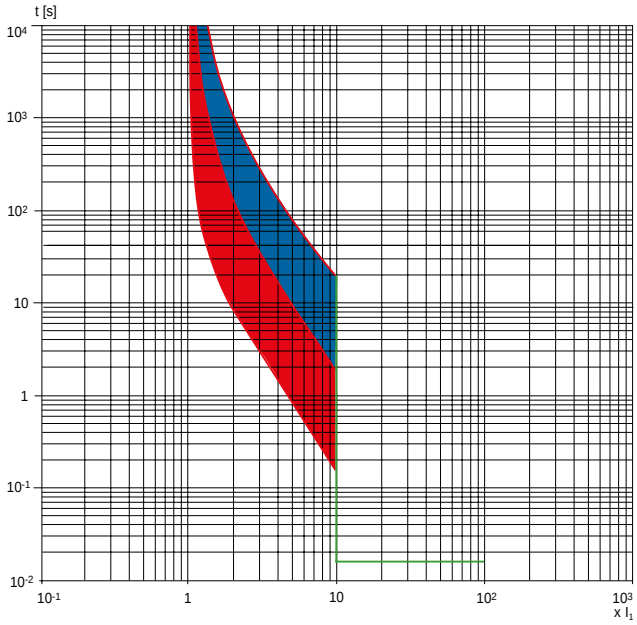

A3 630A - ELT LI
I_3=10xIn

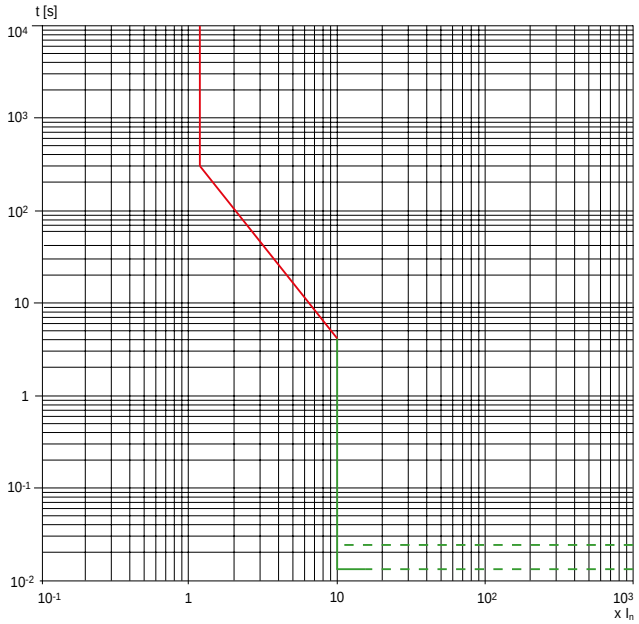

Specific let-through energy curves

A0 100A
230V

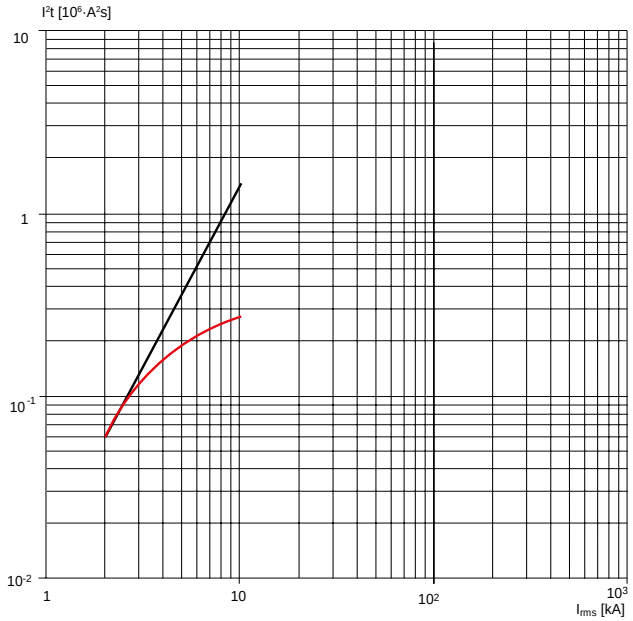

A1 125A
230V

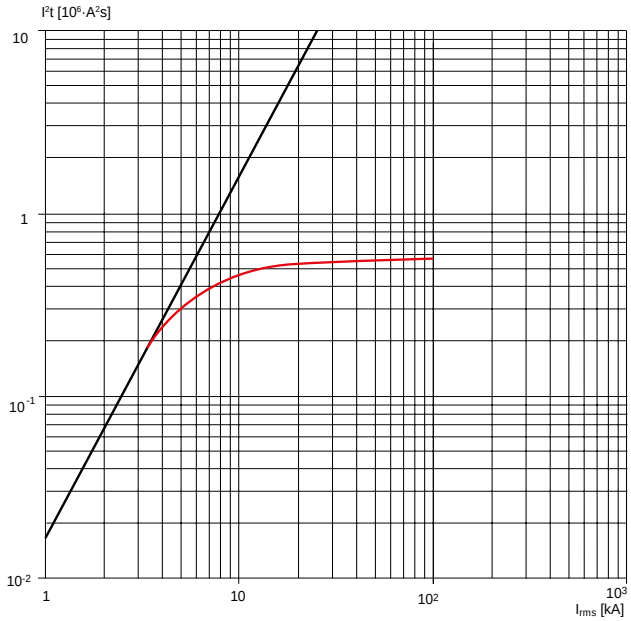

A2 250A
230V

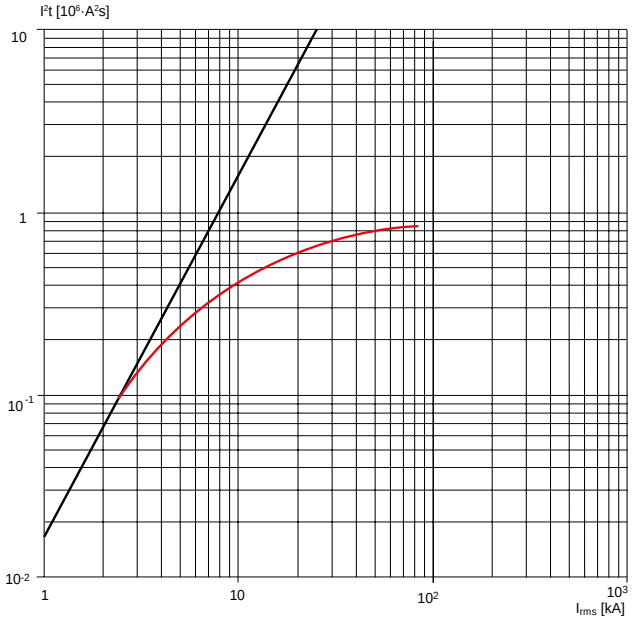

A3 630A
230V

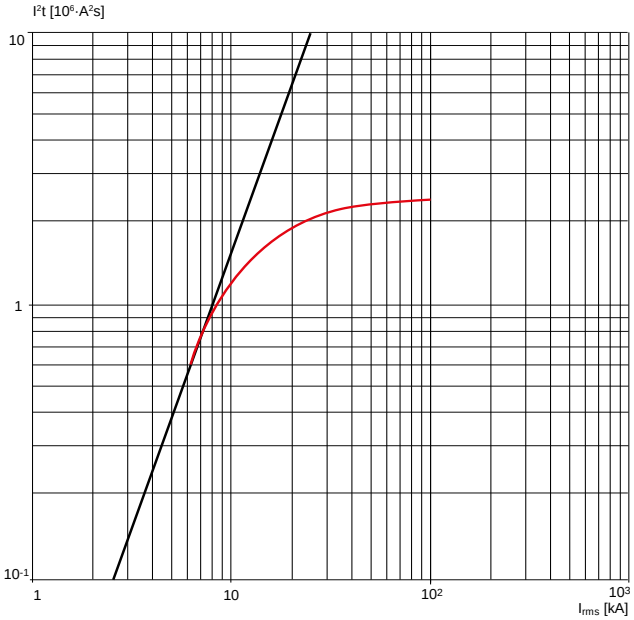

A0 100A
415-440V

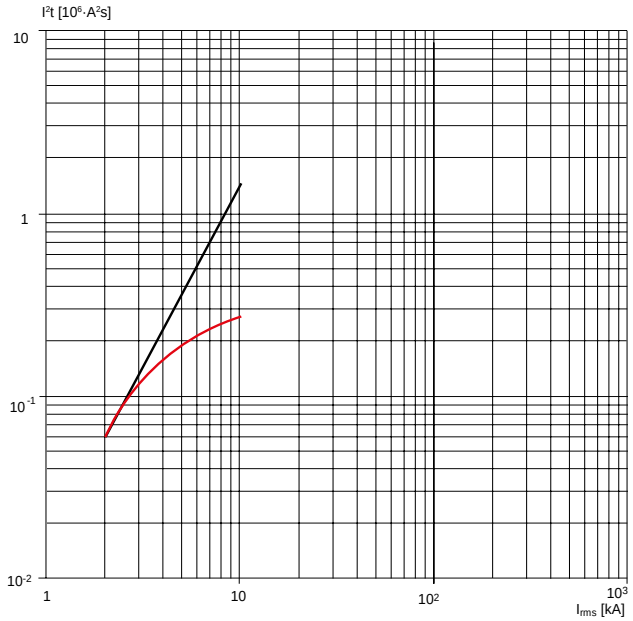

A1 125A
415-440V

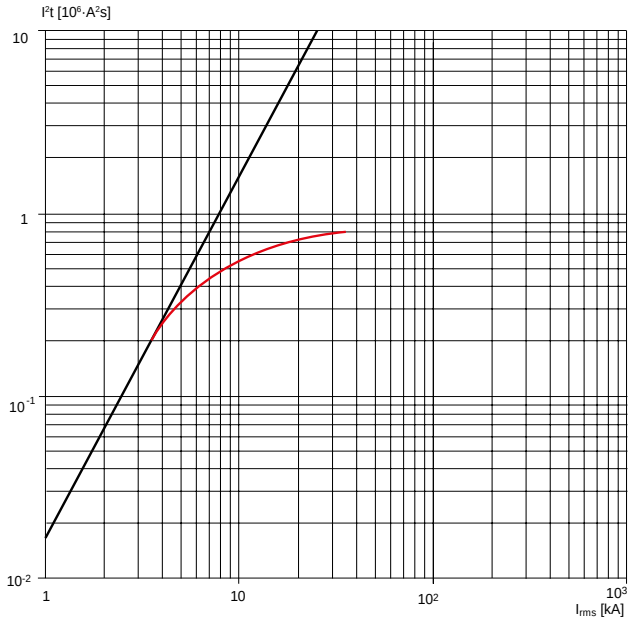

A2 250A
415-440V

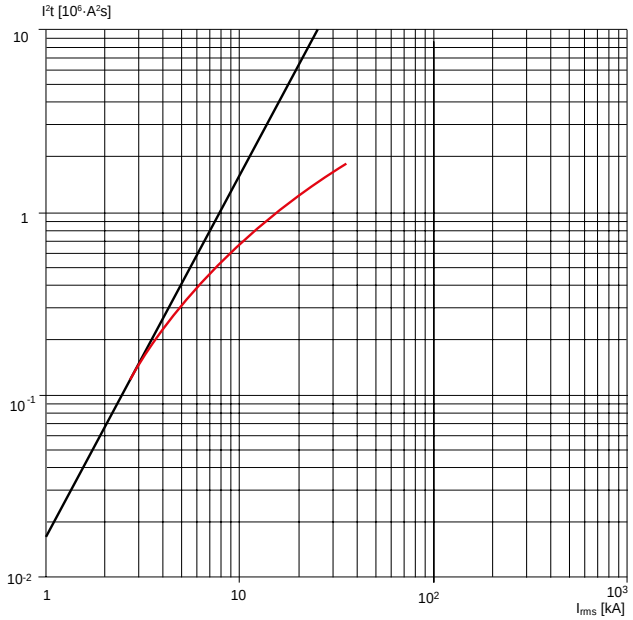

A3 630A
415-440V

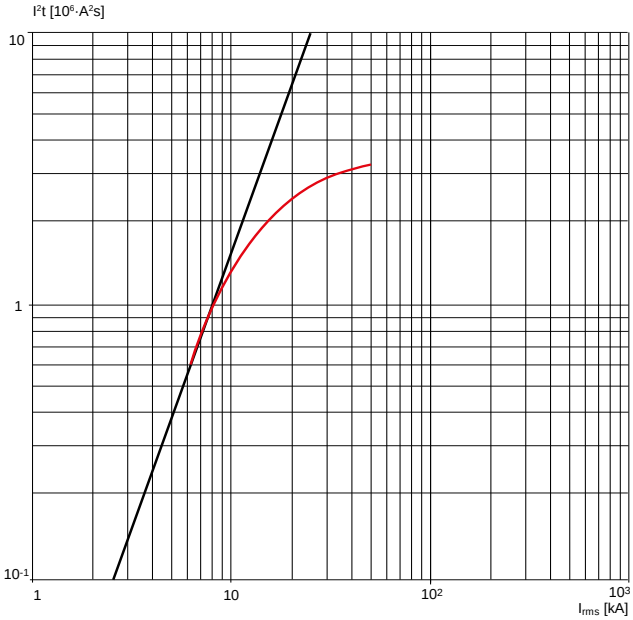

Specific let-through energy curves

A1 125A
500-550V

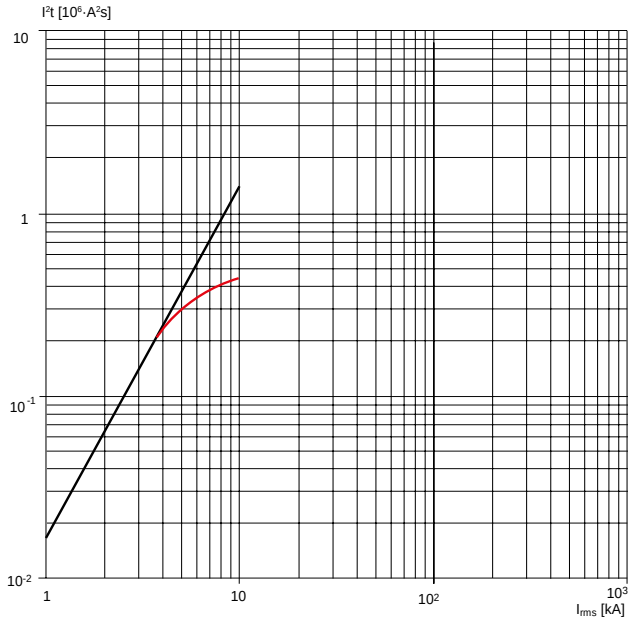

A2 250A
500-550V

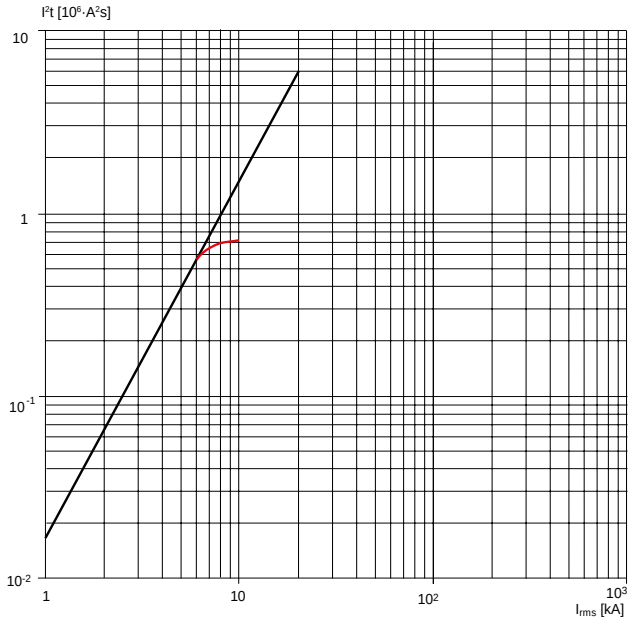

A3 630A
500-550V

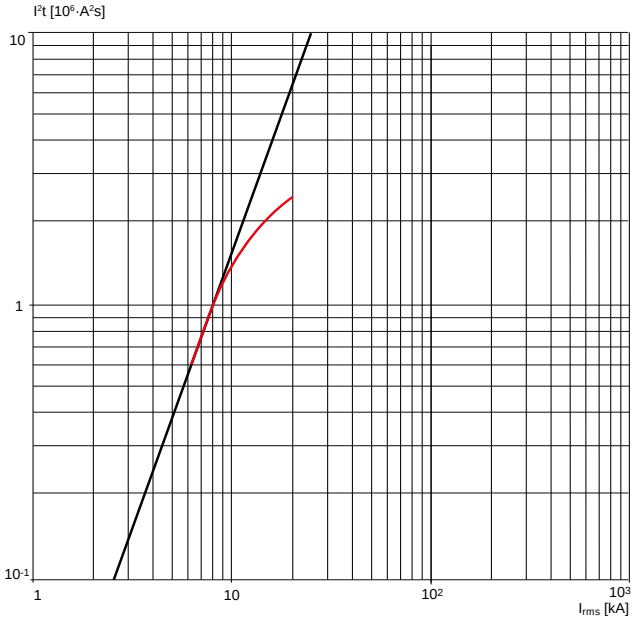

Limitation curves

A0 100A
230V

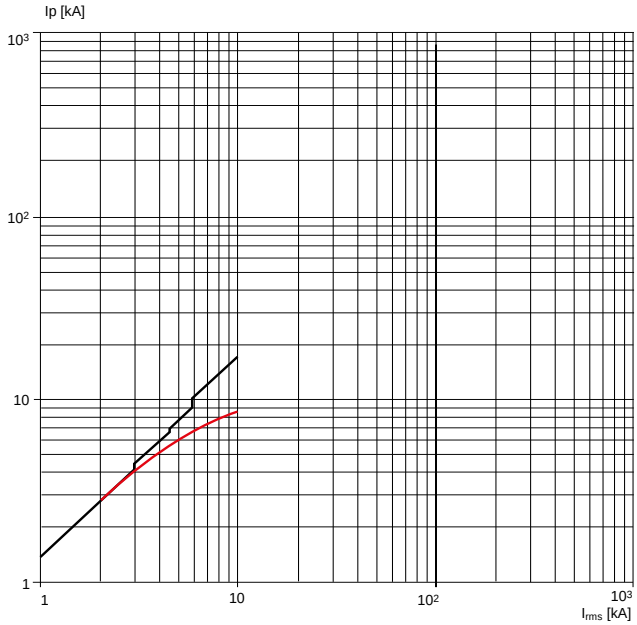

A1 125A
230V

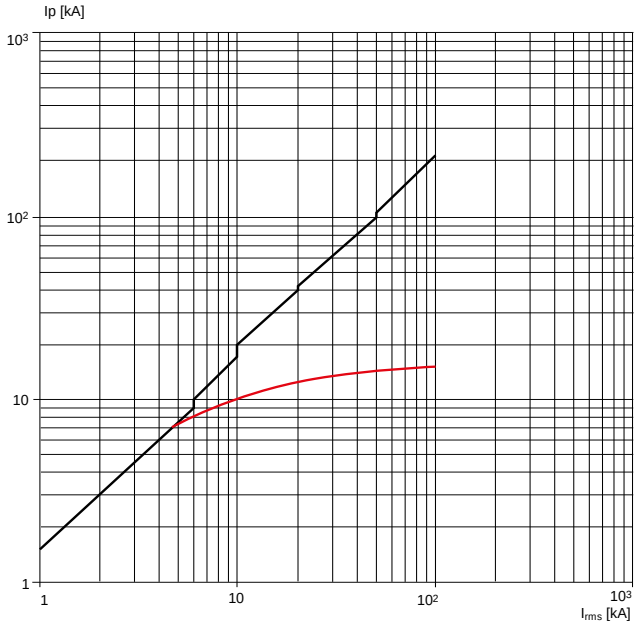

A2 250A
230V

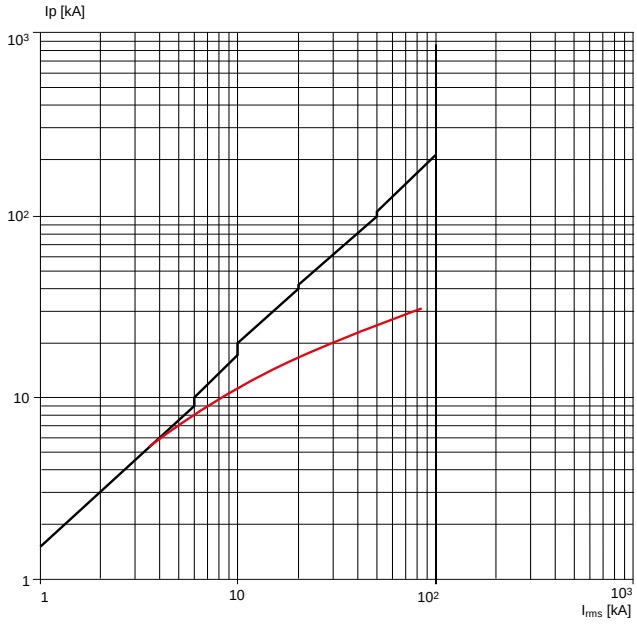

A3 630A
230V

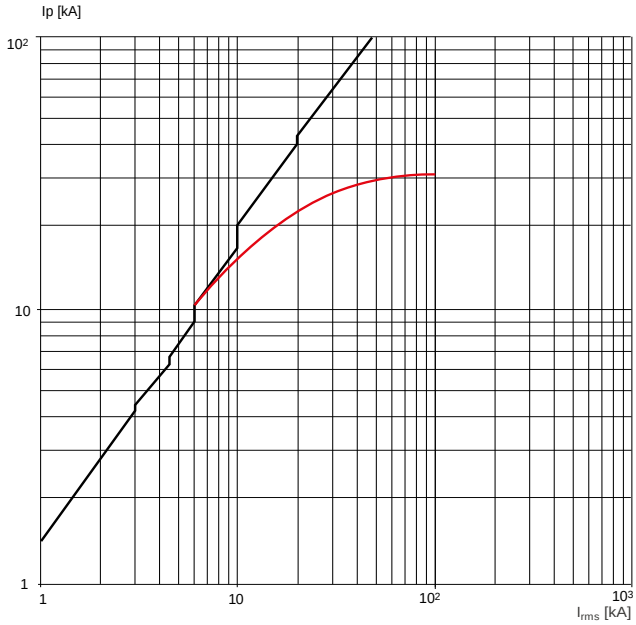

Limitation curves

A0 100A
415-440V

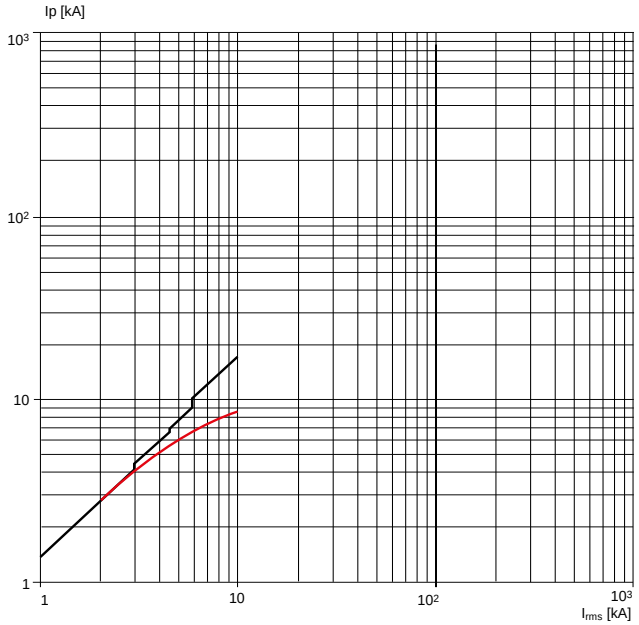

A1 125A
415-440V

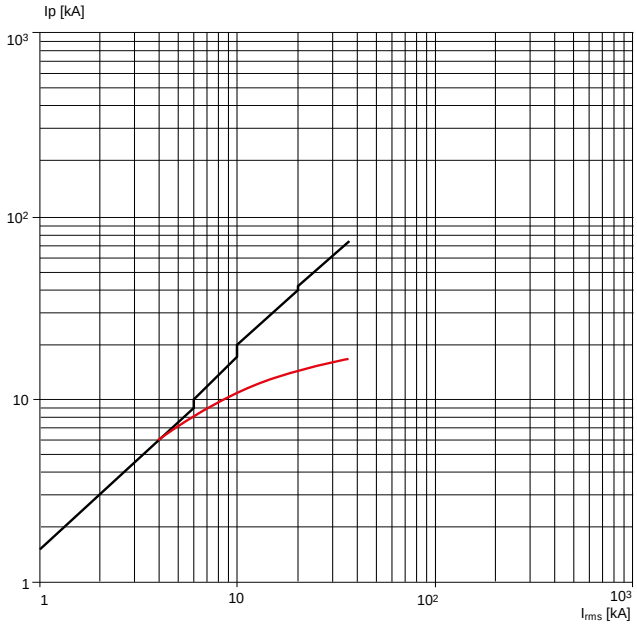

A2 250A
415-440V

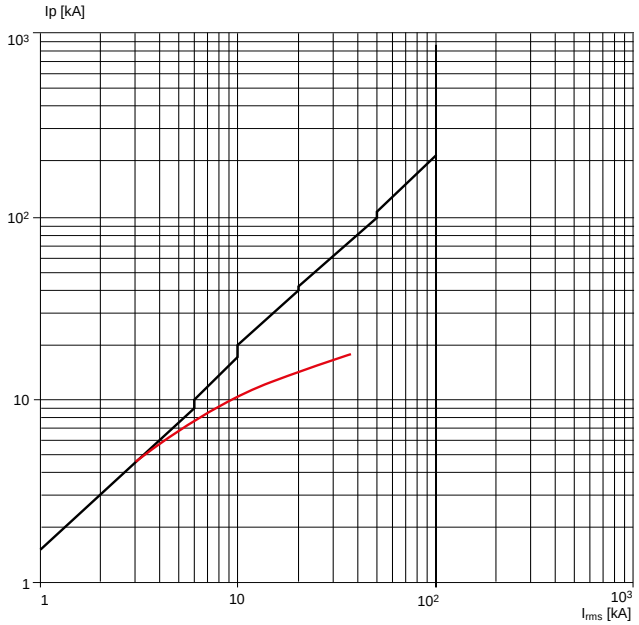

A3 630A
415-440V

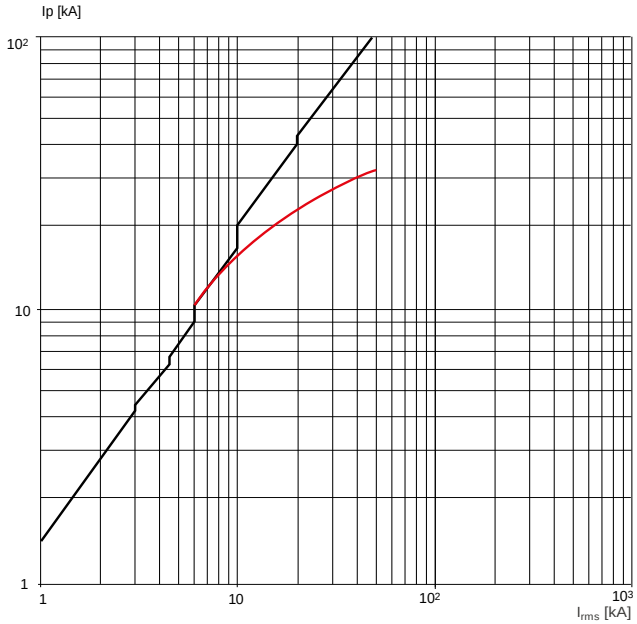

A1 125A
500-550V

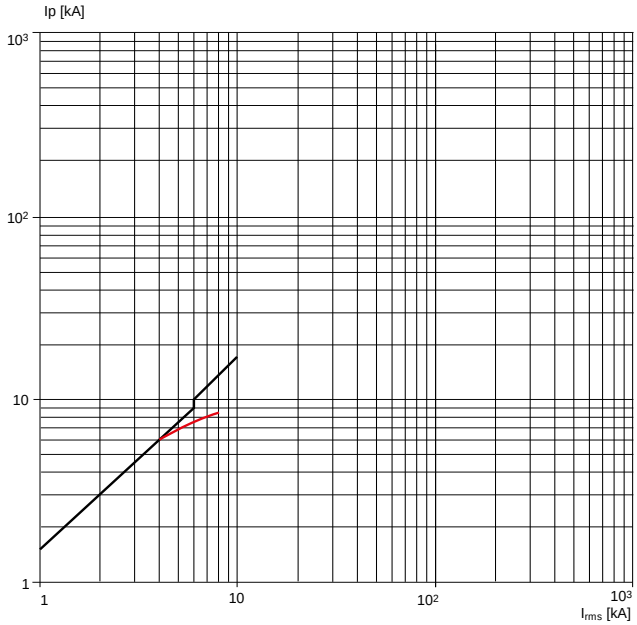

A2 250A
500-550V

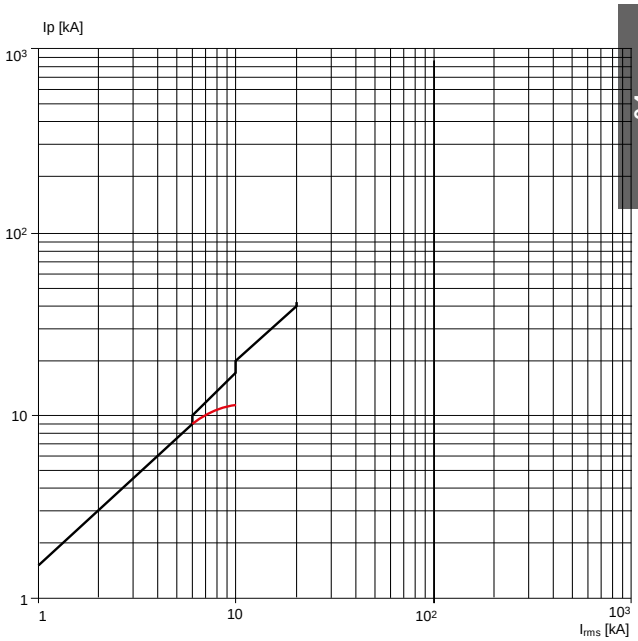

A3 630A
500-550V

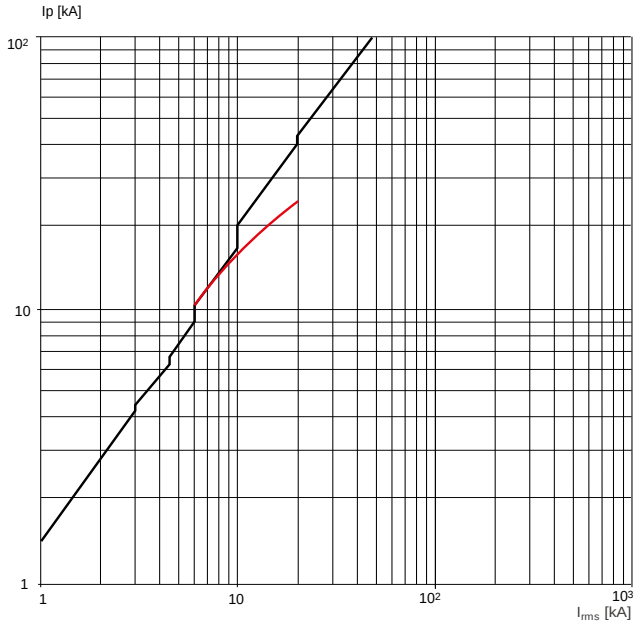

Coordination tables - Back-up
Notes for use

Back-up protection
The following table shows the breaking capacities at 415V AC for SACE FORMULA DSA circuit-breakers.

SACE FORMULA DSA @ 415V AC	
Versions	**Icu [kA]**
A	10
B	18
C	25
N	36
S	50

The tables in the following pages provide the value (in kA, referring to the breaking capacity according to IEC 60947-2 Standard) for which the back-up protection among the combination of selected circuit-breakers is verified. The tables cover the possible combinations between:
- SACE FORMULA DSA molded-case circuit-breakers
- SACE FORMULA DSA molded-case circuit-breakers and ABB miniature circuit-breakers.

The values indicated in the tables refer to the voltage Un up to 415V AC for all the other coordinations.
For the solutions not listed in the following tables, please contact ABB SACE.

Caption
MCB = miniature circuit-breakers (S2, S800)
MCCB = molded-case circuit-breakers (SACE FORMULA DSA)

For miniature circuit-breakers:
B = trip characteristic (Im=3...5In)
C = trip characteristic (Im=5...10In)
D = trip characteristic (Im=10...20In)
K = trip characteristic (Im=8...14In)
Z = trip characteristic (Im=2...3In)

Coordination tables - Back-up

MCCB - MCB (415V) / MCCB - MCCB (415V)

Back-up
Supply side circuit-breaker: MCCB
Load side circuit-breaker: MCB

—
MCCB-MCB @ 415 V

			Supply side	**A1**	**A2**	**A1**	**A2**	**A1**	**A2**
			Version	**B**		**C**		**N**	
Load S.	**Char.**	**In (A)**	**Icu (kA)**	**18**		**25**		**36**	
S200	B,C,K,Z	0.5...10	10	16	16	25	25	30	36
		13...63		16	16	25	25	30	36
S200M	B,C	0.5...10	15	16	16	25	25	30	36
		13...63		16	16	25	25	30	36
S200P	B,C,D,K,Z	0.5...10	25	-	-	-	-	30	36
		13...25		-	-	-	-	30	36
		32...63	15	16	16	25	25	30	36
S280	B,C	80...100	6	16	16	16	16	16	36
S290	C,D	80...125	15	16	16	25	25	30	36
S800N	B,C,D	10...125	36	-	-	-	-	-	-
S800S	B,C,D,K	10...125	50	-	-	-	-	-	-

Back-up
Supply side circuit-breaker: MCCB
Load side circuit-breaker: MCCB

—
MCCB-MCCB @ 415 V

		Supply side	**A2**	**A2**	**A2**	**A3**	**A3**
		Version	**B**	**C**	**N**	**N**	**S**
Load S.	**Char.**	**Icu (kA)**	**18**	**25**	**36**	**36**	**50**
A0	C	10	18	20	25	20	20
A1	A	10	18	25	36	25	25
A1	B	18	-	25	36	25	36
A2		18	-	-	-	25	36
A1	C	25	-	-	36	36	50
A2		25	-	-	-	36	50
A1	N	36	-	-	-	-	50
A2		36	-	-	-	-	50

Overall dimensions

5/2 **A0 - Circuit-breaker and terminals**
5/2 Circuit-breaker and terminals

5/3 **A1 - Circuit-breaker and terminals**
5/3 Circuit-breaker and terminals
5/9 Accessories

5/10 **A2 - Circuit-breaker and terminals**
5/10 Circuit-breaker and terminals
5/16 Accessories

5/17 **A3 - Circuit-breaker and terminals**
5/17 Circuit-breaker and terminals
5/21 Accessories

5/23 **FORMULA Link**
5/23 FORMULA Link 250A
5/24 FORMULA Link 400A
5/25 FORMULA Link 630A
5/26 FORMULA Link 800A

5/27 **Distances to be respected**

A0 - Circuit-breaker and terminals

Mounting on the back plate

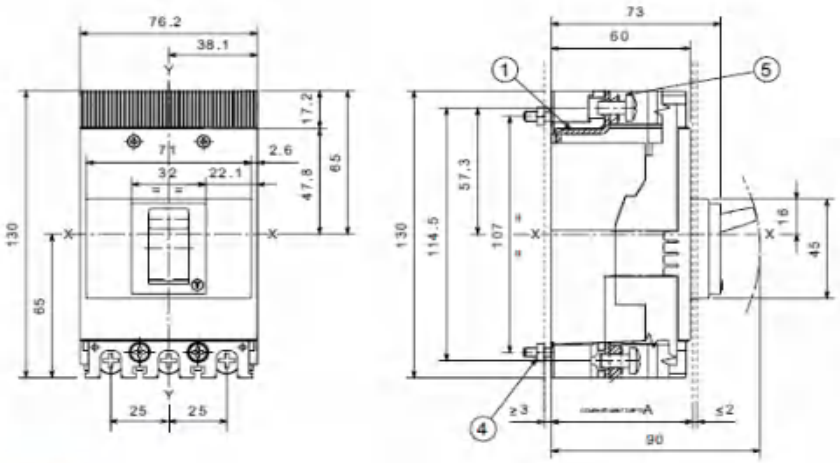

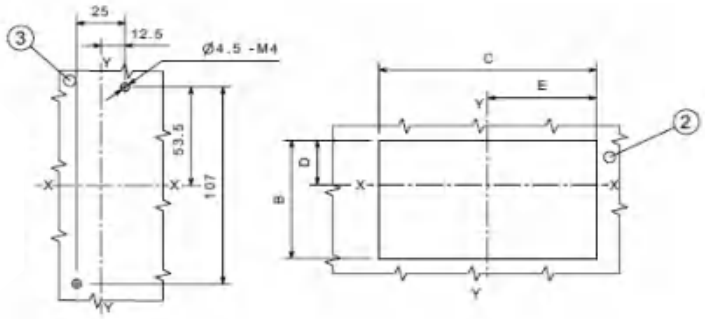

	A [mm]	B [mm]	C [mm]	D [mm]	E [mm]
Without flange	69	43	34	15	17
	61	47	73	17	36.5

Caption

1. Front terminals
2. Compartment door sheet steel drilling for fixing the flange
3. Fixing on sheet steel
4. Tightening torque 1.1 Nm
5. Tightening torque 4 Nm

A1 - Circuit-breaker and terminals

Mounting on the back plate

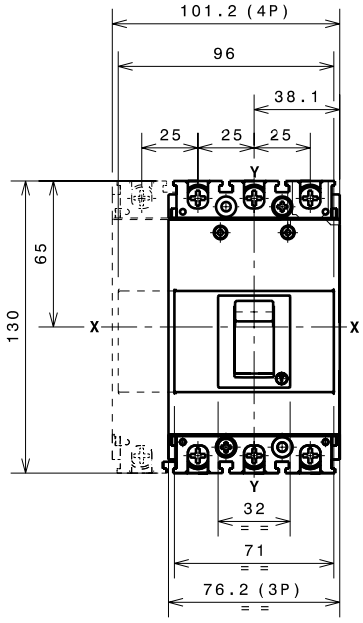

3-4 poles

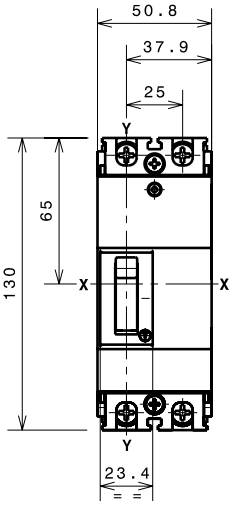

2 poles

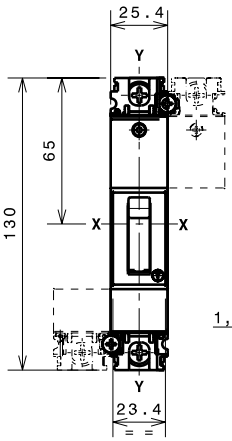

1 pole

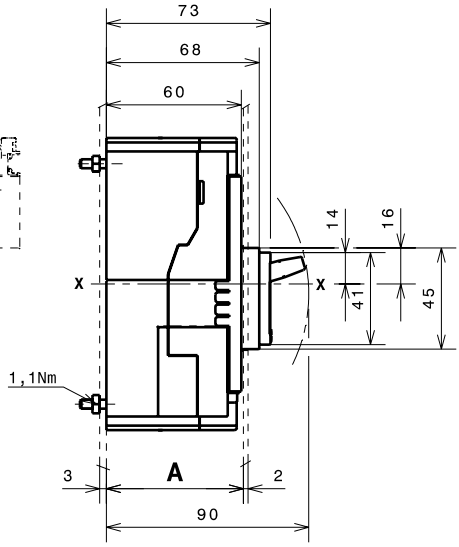

Distance between compartment door and back of switchboard		A [mm]
Without flange	1p-2p-3p-4p	69
	1p-2p-3p-4p	61

The circuit-breaker installed at:

- A = 69 mm has the front plate around the lever protruding from the compartment door;
- A = 61 mm has the front plate around the lever protruding from the compartment door.

Mounting onto DIN 50022 rail

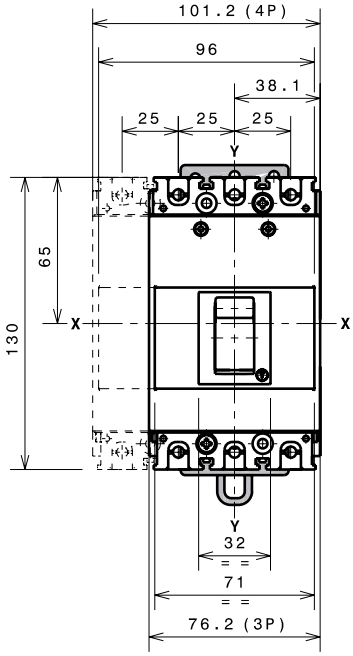

3-4 poles

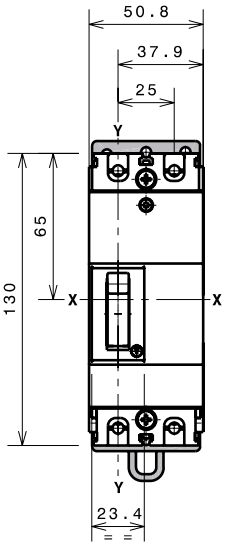

2 poles

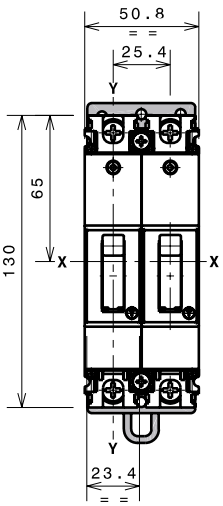

1 pole

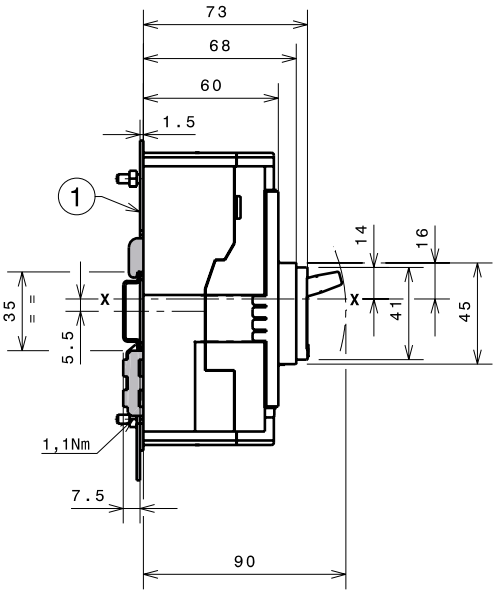

Caption

(1) Mounting bracket

A1 - Circuit-breaker and terminals

Drilling templates for support sheet

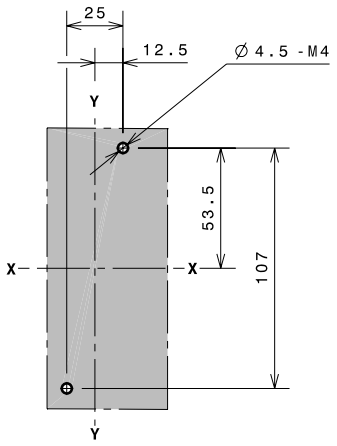

1-3-4 poles

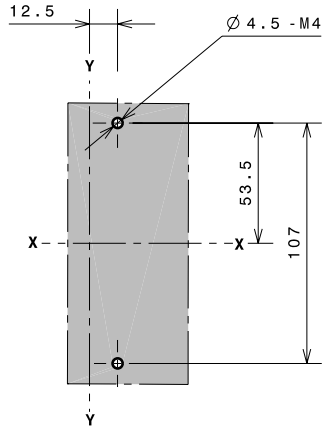

2 poles

Drilling templates for compartment door

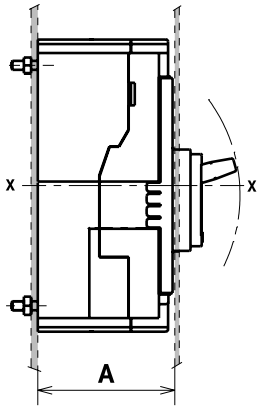

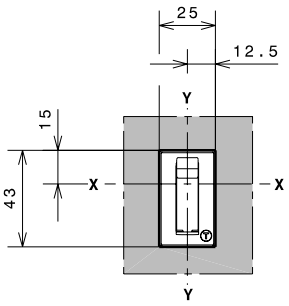

A = 69mm
1-2 poles

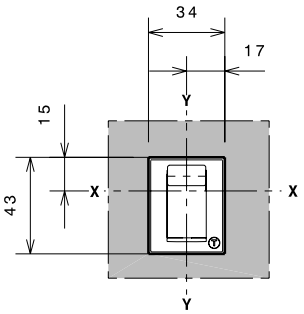

A = 69mm
3-4 poles

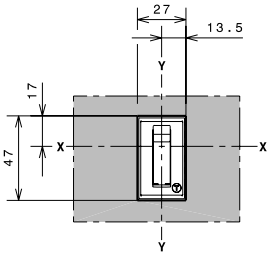

A = 61mm
1 pole

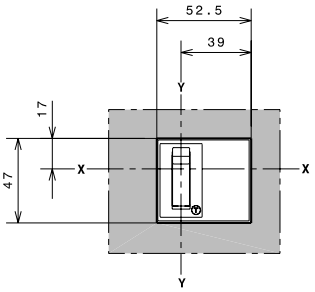

A = 61mm
2 poles

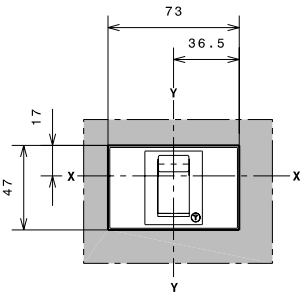

A = 61mm
3 poles

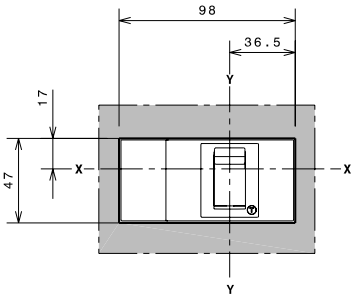

A = 61mm
4 poles

F Terminals

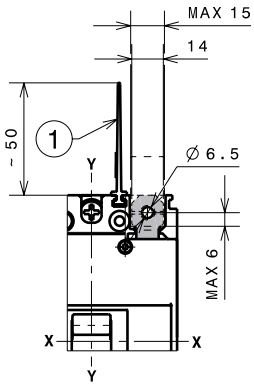

3-4 poles

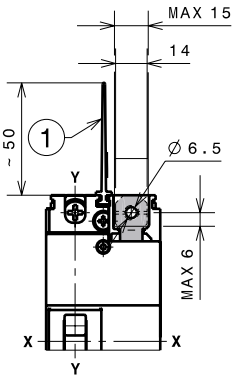

2 poles

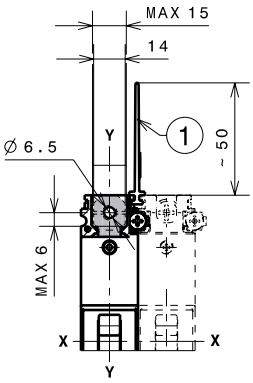

1 pole

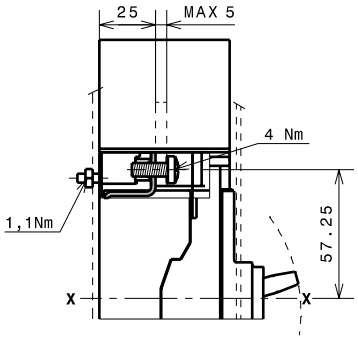

Caption

1. 50 mm phase separators between the terminals

EF Terminals

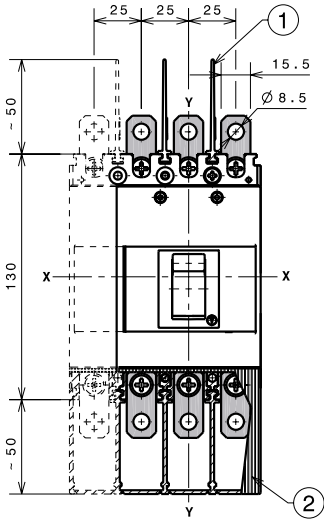

3-4 poles

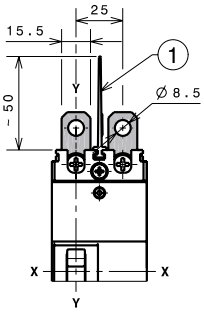

2 poles

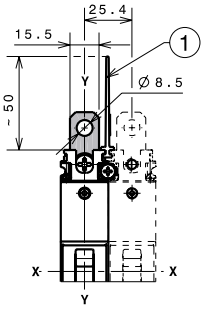

1 pole

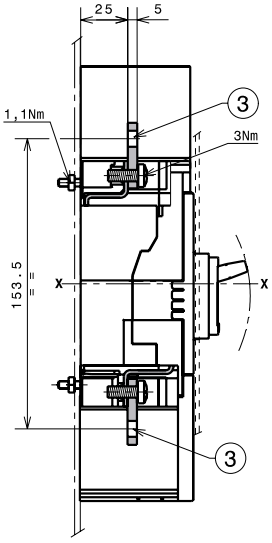

Caption

1. 50 mm phase separators are the standard supply of EF terminals kit
2. Top terminal covers with IP40 protection degree (on request)
3. Front extended terminals

A1 - Circuit-breaker and terminals

ES Terminals

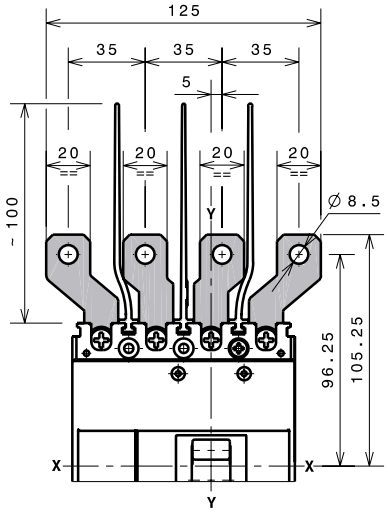

4 poles

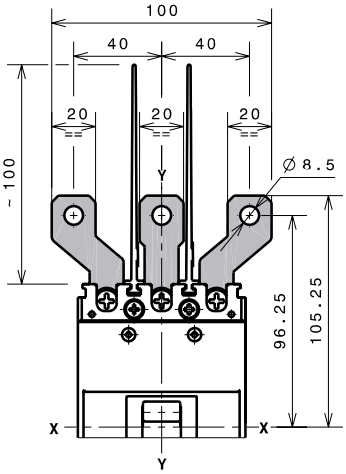

2 poles

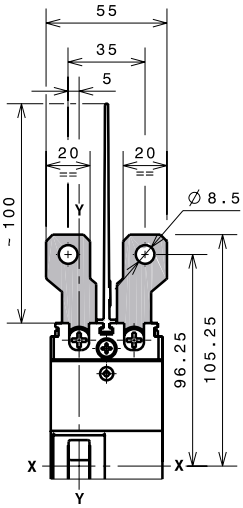

1 pole

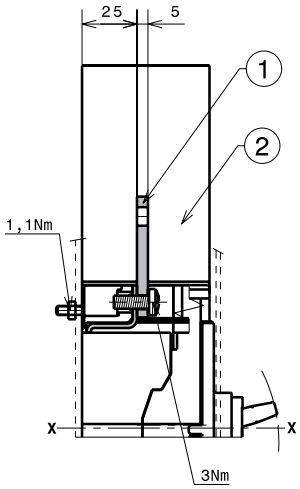

Caption

1. Front extended spread terminals
2. 100 mm phase separators between the terminals

FCCuAl 1x25...50mm² terminals

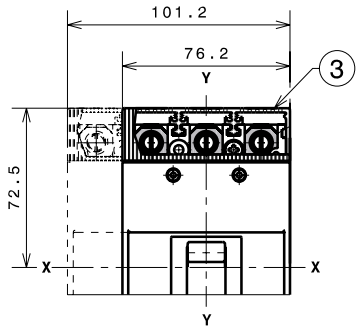

3-4 poles

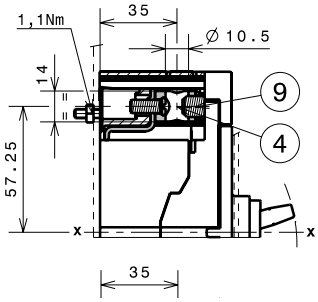

3-4 poles

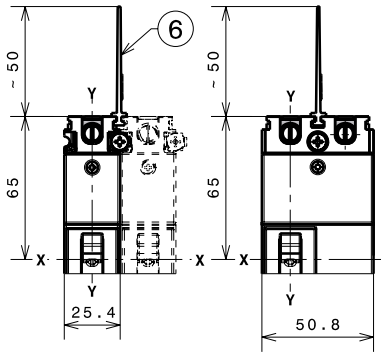

1- and 2-pole

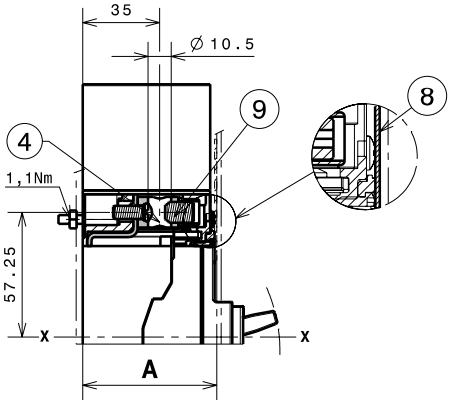

1- and 2-pole

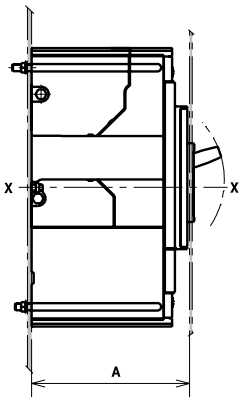

1- and 2-pole

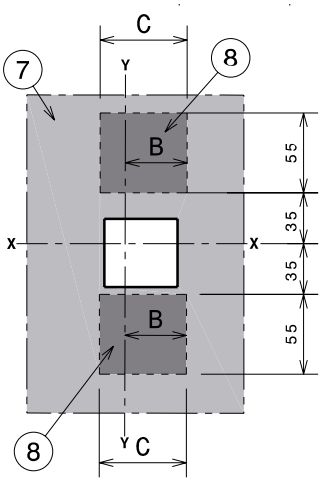

1- and 2-pole

	A [mm]	B [mm]	C [mm]	
Without flange	69	33	66	1-pole
	69	58	91	2-poles
	61*	33	66	1-pole
	61*/	58	91	2-poles

* Distance possible only with insulation plate max. 1 mm thick

Caption

(3) Bottom terminal covers with IP40 protection degree (compulsory)
(4) FCCuAl 50mm² terminals
(6) 50 mm phase separators between the terminals (compulsory) not supplied with FC CuAl terminals kit, but with the circuit-breaker in basic version
(7) Compartment door drilling template and fixing insulation plate (on customer's behalf)
(8) Compulsory internal 1-pole and 2-pole insulation plates (on customer's behalf)

A1 - Circuit-breaker and terminals

FCCuAl 1x1...25mm² terminals

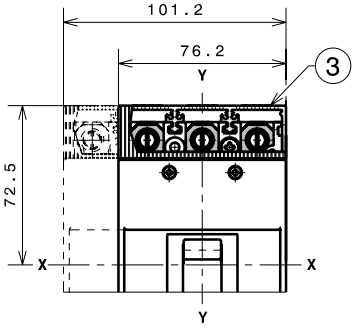

3-4 poles

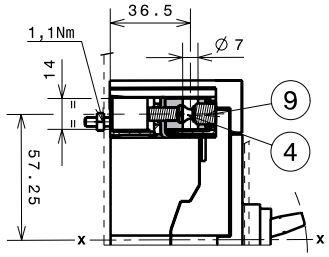

3-4 poles

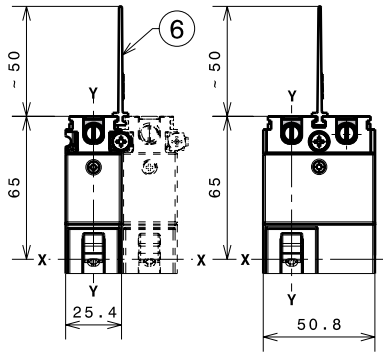

1- and 2-pole

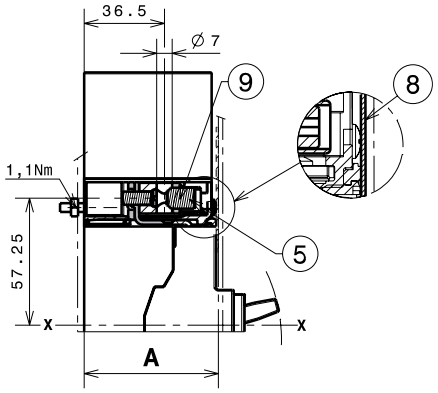

1- and 2-pole

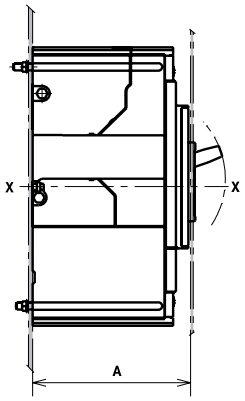

1- and 2-pole

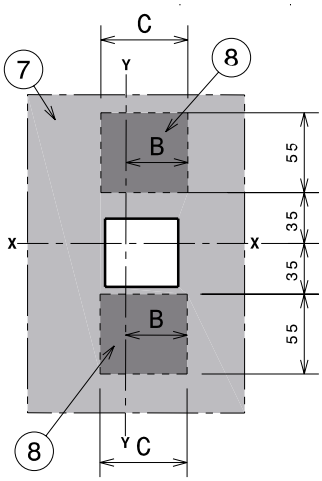

1- and 2-pole

	A [mm]	B [mm]	C [mm]	
Without flange	69	33	66	1-pole
	69	58	91	2-poles
	61*	33	66	1-pole
	61*/	58	91	2-poles

* Distance possible only with insulation plate max. 1 mm thick

Caption

(3) Bottom terminal covers with IP40 protection degree (compulsory)
(4) FCCuAl 25mm² terminals
(6) 50 mm phase separators between the terminals (compulsory) not supplied with FC CuAl terminals kit, but with the circuit-breaker in basic version
(7) Compartment door drilling template and fixing insulation plate (on customer's behalf)
(8) Compulsory internal 1-pole and 2-pole insulation plates (on customer's behalf)

A1 - Accessories

Rotary handle operating mechanism on circuit-breaker and compartment door drilling template (RHD)

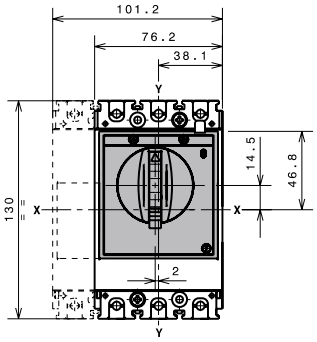

3-4 poles

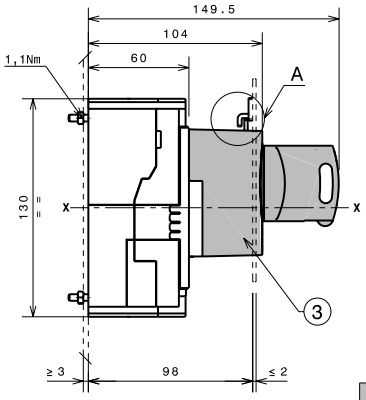

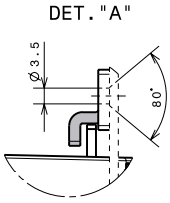

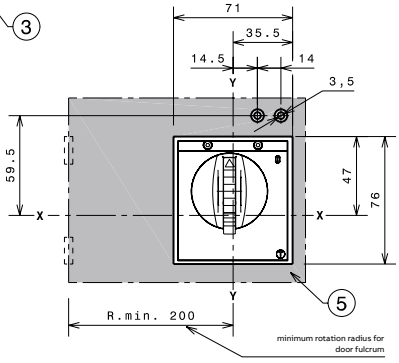

3-4 poles

Caption

3 Rotary handle operating mechanism on circuit-breaker

5 Drilling template for compartment with direct handle

Rotary handle operating mechanism on compartment door and compartment door drilling template (RHE)

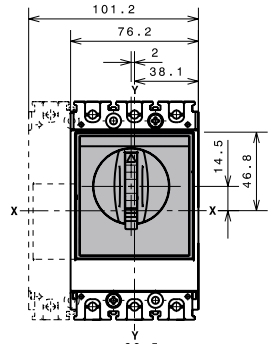

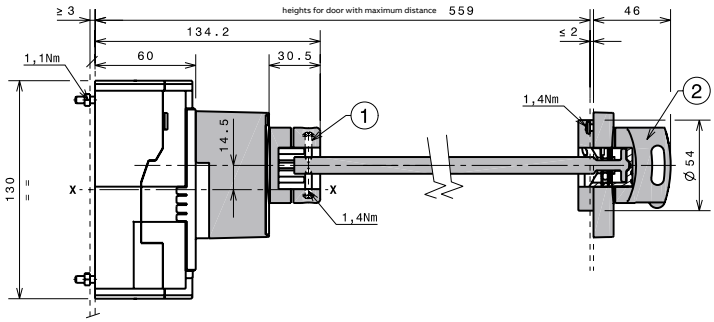

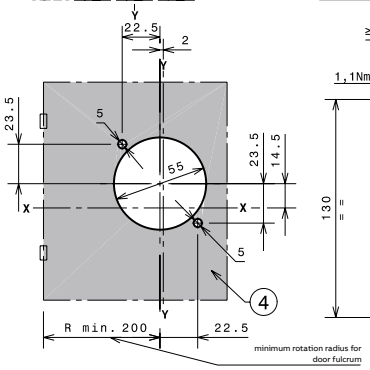

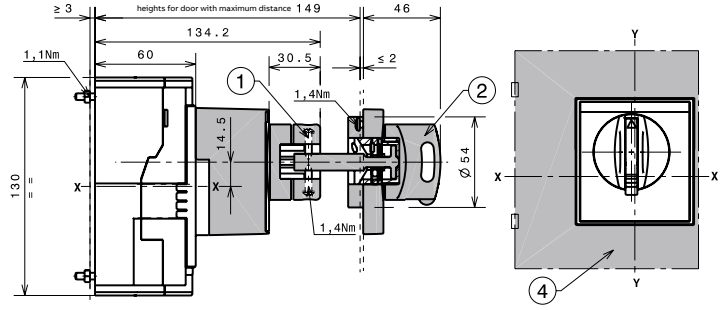

3-4 poles

Caption

1 Transmission group

2 Extended rotary handle operating mechanism

4 Drilling template for compartment with extended rotary handle

A2 - Circuit-breaker and terminals

Mounting on the back plate

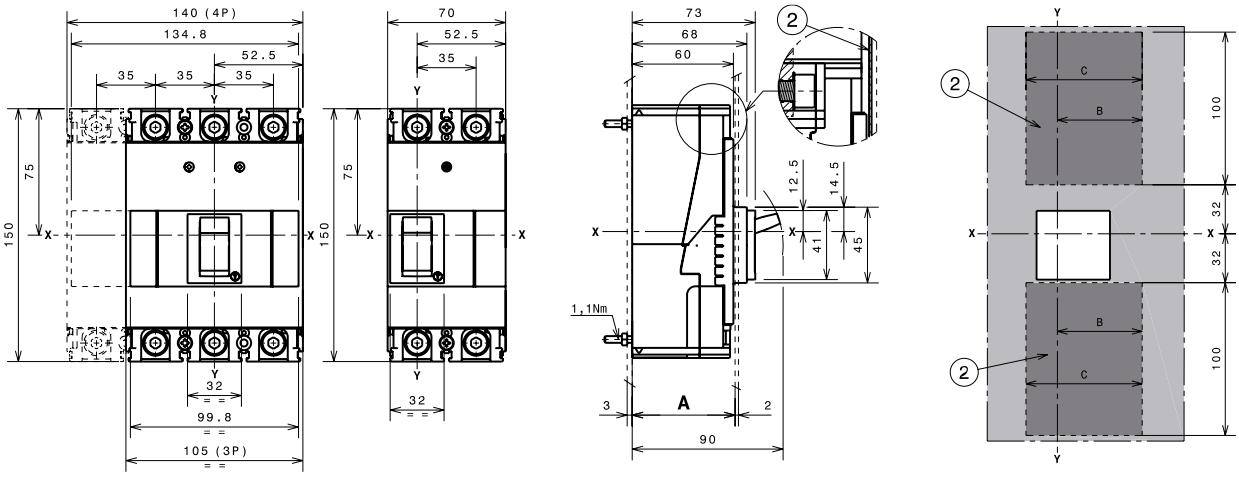

3-poles

2-poles

Distance between compartment door and back of switchboard		A [mm]
Without flange	2p-3p-4p	69
	2p-3p-4p	61

The circuit-breaker installed at:
- A = 69 mm has the front plate around the lever protruding from the compartment door;
- A = 61 mm has the front plate around the lever protruding from the compartment door.

	A [mm]	B [mm]	C [mm]	
Without flange	61	77.5	120	2 poles
	61	77.5	155	3 poles
	61	77.5	190	4 poles
	69	77.5	120	2 poles
	69	77.5	155	3 poles
	69	77.5	190	4 poles

Caption

(2) Compulsory internal insulation plates (on customer's behalf) for use Ue ≥415 V

Mounting onto DIN 50022 rail

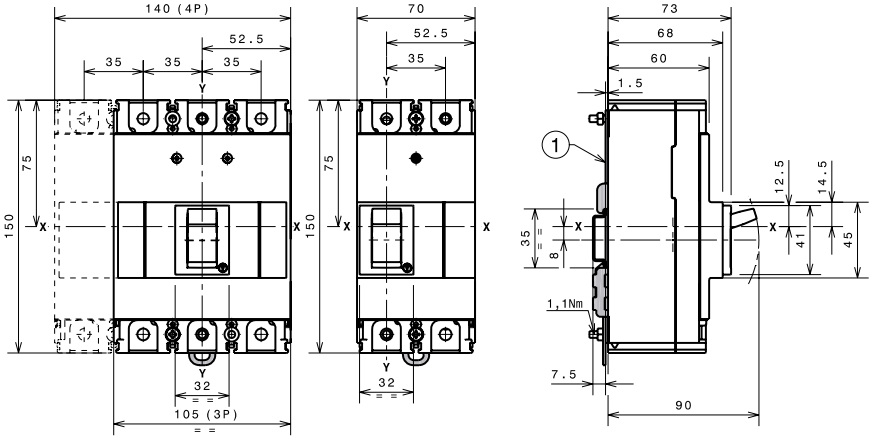

3-poles

2-poles

Caption

(1) Fixing bracket

Drilling templates for support sheet

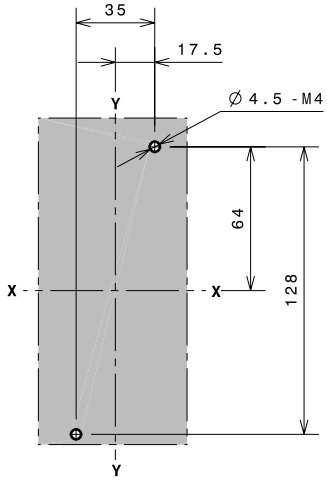

3-4 poles

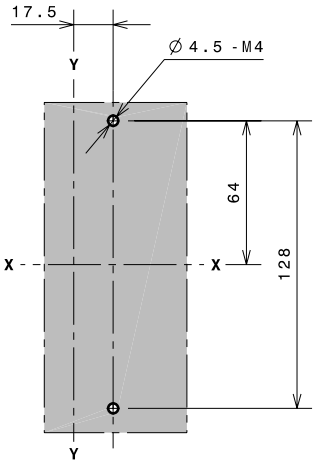

2 poles

Compartment door drilling templates

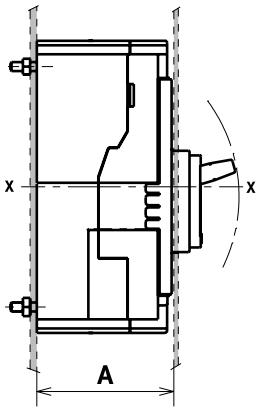

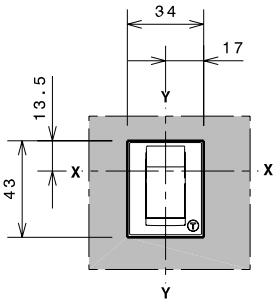

A = 69mm
2-3-4 poles

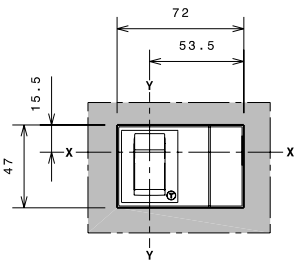

A = 61mm
2 poles

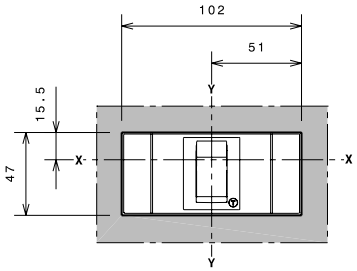

A = 61mm
3 poles

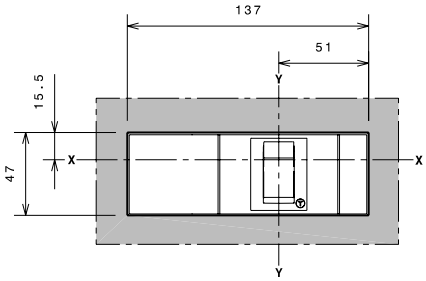

A = 61mm
4 poles

A2 - Circuit-breaker and terminals

F Terminals

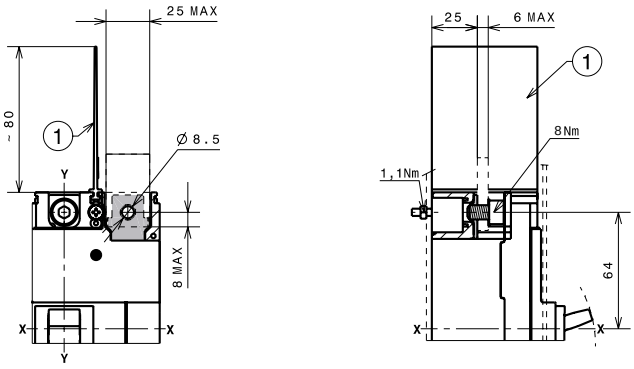

2-3-4 poles

Caption

(1) 80 mm phase separators between the terminals (compulsory) supplied

EF Terminals

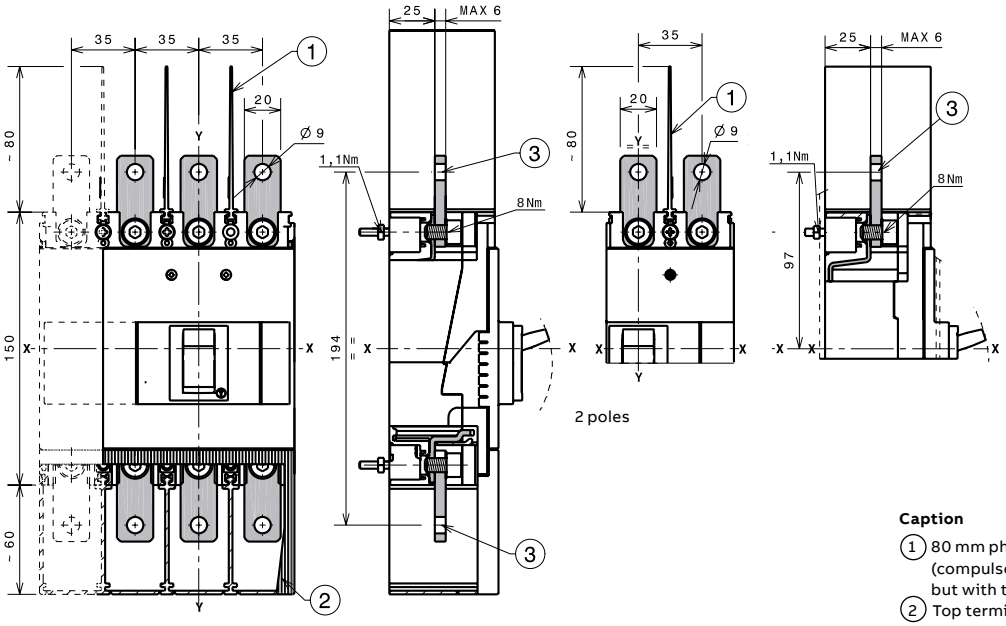

2 poles

3-4 poles

Caption

(1) 80 mm phase separators between the terminals (compulsory) not supplied with EF terminals kit, but with the circuit-breaker in base version

(2) Top terminal covers with IP40 protection degree (on request)

(3) Front extended terminals

ES Terminals

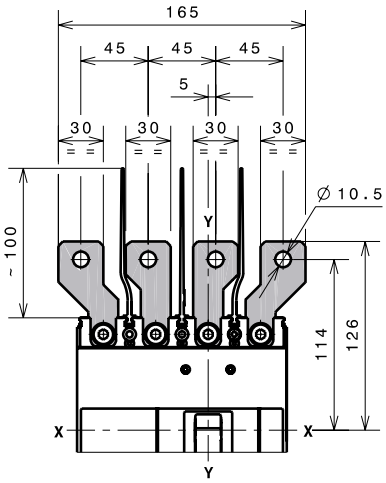

4-poles

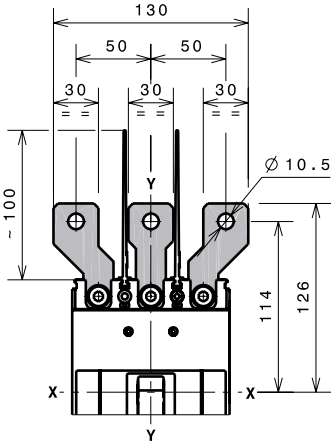

3-poles

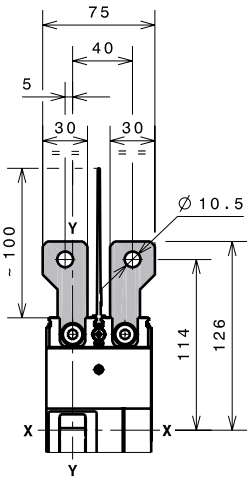

2-poles

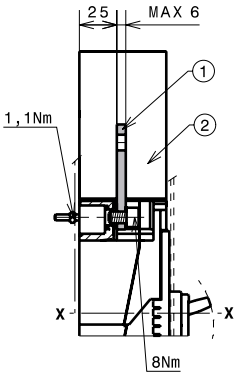

Caption

1 Front extended spread terminals

2 100 mm phase separators between the terminals

A2 - Circuit-breaker and terminals

FCCuAl 1x120...185mm² terminals

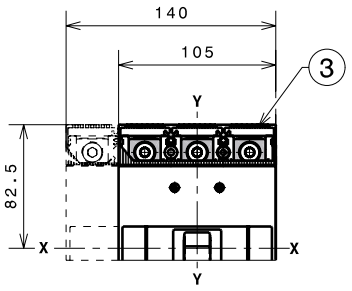

3-4 poles

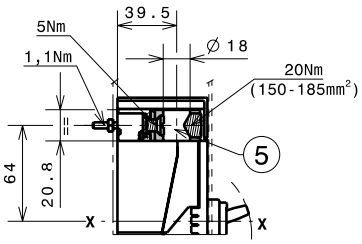

3-4 poles

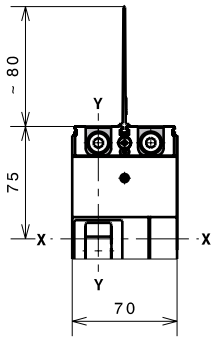

2-poles

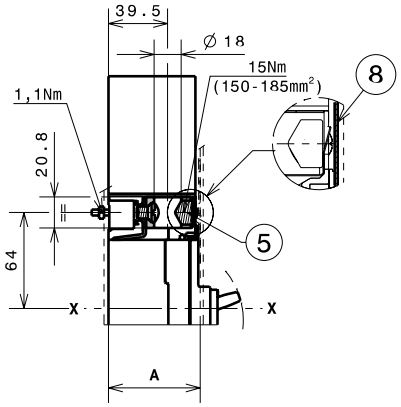

2-poles

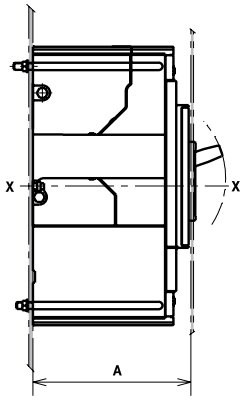

2-poles

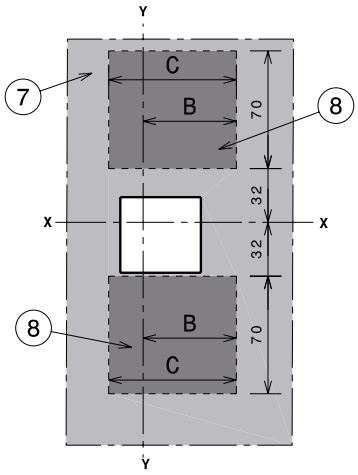

2-poles

	A [mm]	B [mm]	C [mm]	
Without flange	69	77.5	120	2 poles
	61	77.5	120	2 poles

If terminals are mounted on top of circuit-breaker, Icu=50% and Ics=Icu.

Caption

(3) Bottom terminal covers with IP40 degree of protection (compulsory)

(5) Terminals FCCuAl 185mm²

(6) 80mm phase separators between the terminals (compulsory) not supplied with FCCuAl terminals kit, but with the circuit-breaker in basic version

(7) Compartment door drilling template and fixing insulation plate (on customer's behalf) 2 poles

(8) Compulsory internal insulation plates (on customer's behalf) max 1mm thick

FCCuAl 1x150...150mm² terminals

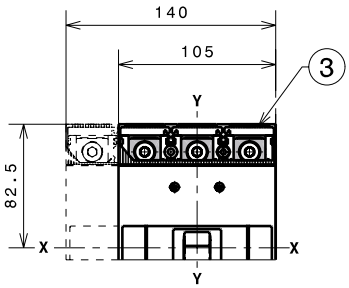

3-4 poles

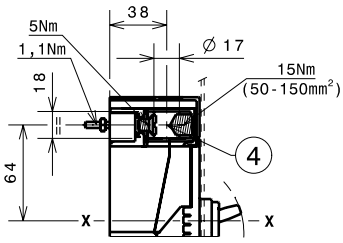

3-4 poles

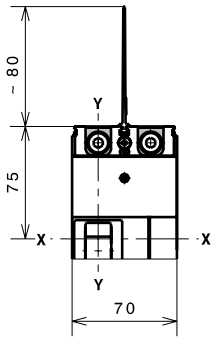

2-poles

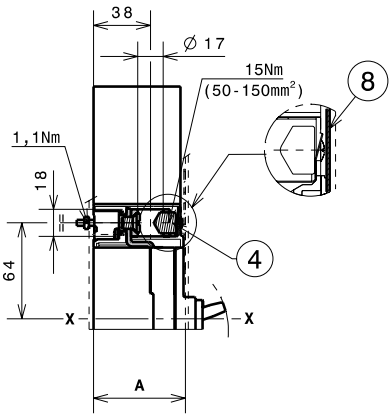

2-poles

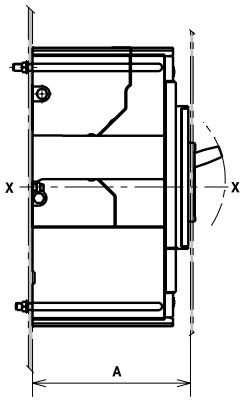

2-poles

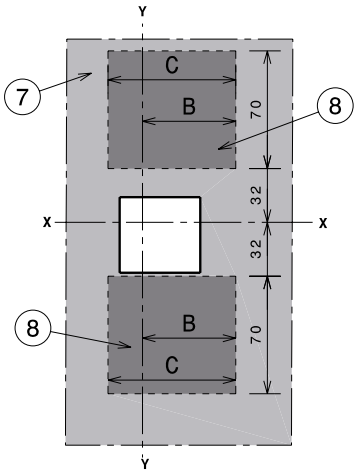

2-poles

	A [mm]	B [mm]	C [mm]	
Without flange	69	77.5	120	2 poles
	61	77.5	120	2 poles

If terminals are mounted on top of circuit-breaker, Icu=50% and Ics=Icu.

Caption

3 Bottom terminal covers with IP40 degree of protection (compulsory)

5 Terminals FCCuAl 150mm²

6 80mm phase separators between the terminals (compulsory) not supplied with FCCuAl terminals kit, but with the circuit-breaker in basic version

7 Compartment door drilling template and fixing insulation plate (on customer's behalf) 2 poles

8 Compulsory internal insulation plates (on customer's behalf) max 1mm thick

A2 - Accessories

Rotary handle operating mechanism on circuit-breaker and compartment door drilling template (RHD)

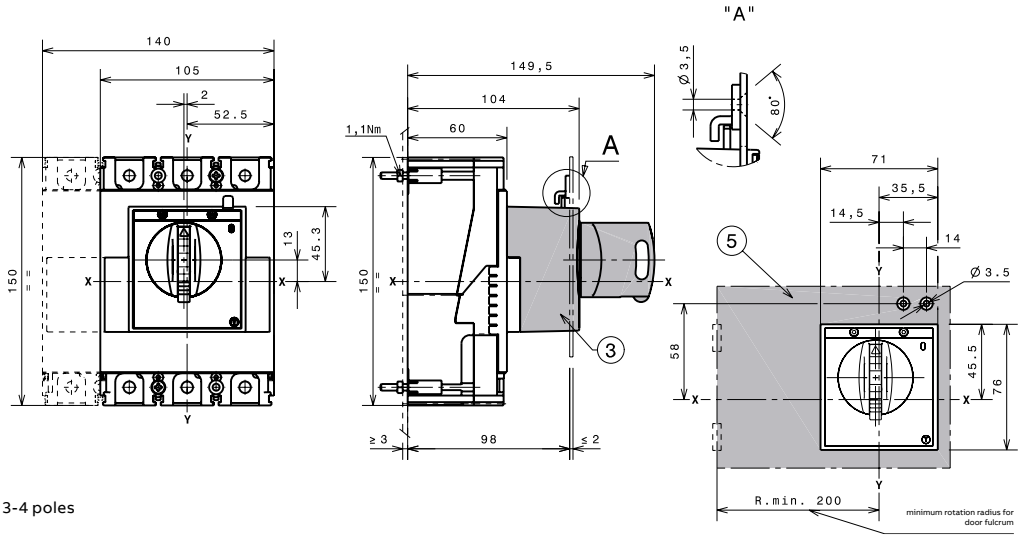

3-4 poles

Caption

(3) Rotary handle operating mechanism on circuit-breaker
(5) Drilling template for compartment with direct handle

Rotary handle operating mechanism on compartment door and compartment door drilling template (RHE)

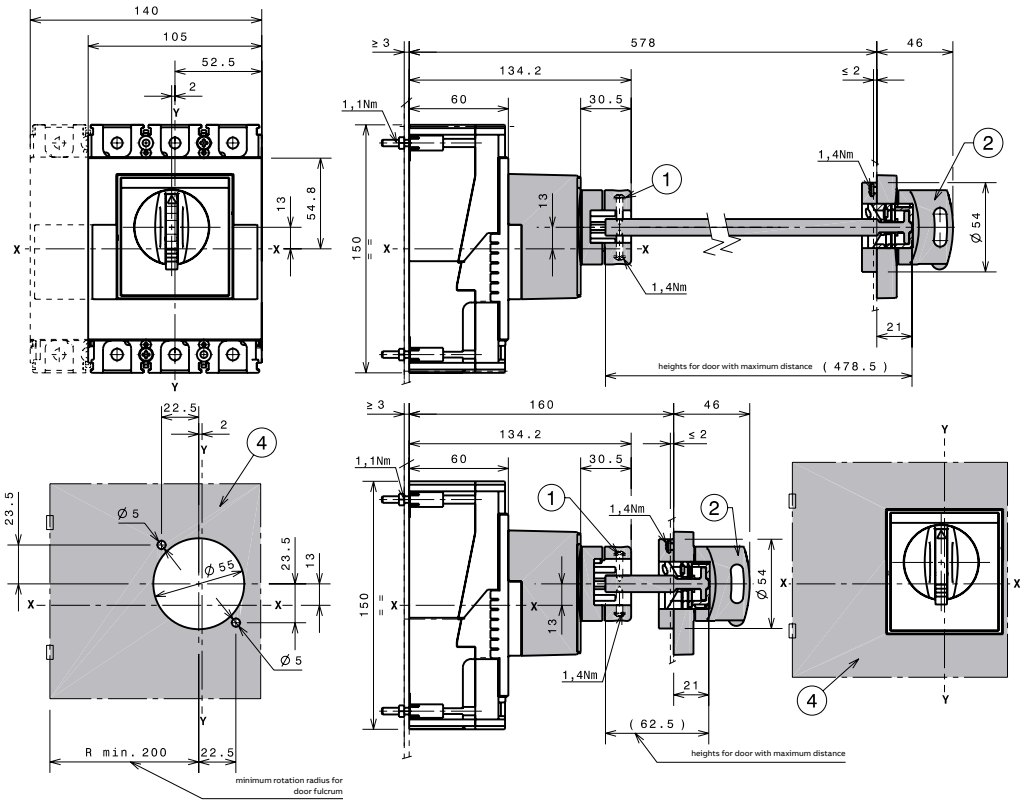

3-4 poles

Caption

(1) Transmission group
(2) Extended rotary handle operating mechanism
(4) Drilling template for compartment with extended rotary handle

A3 - Circuit-breaker and terminals

Mounting on the back plate

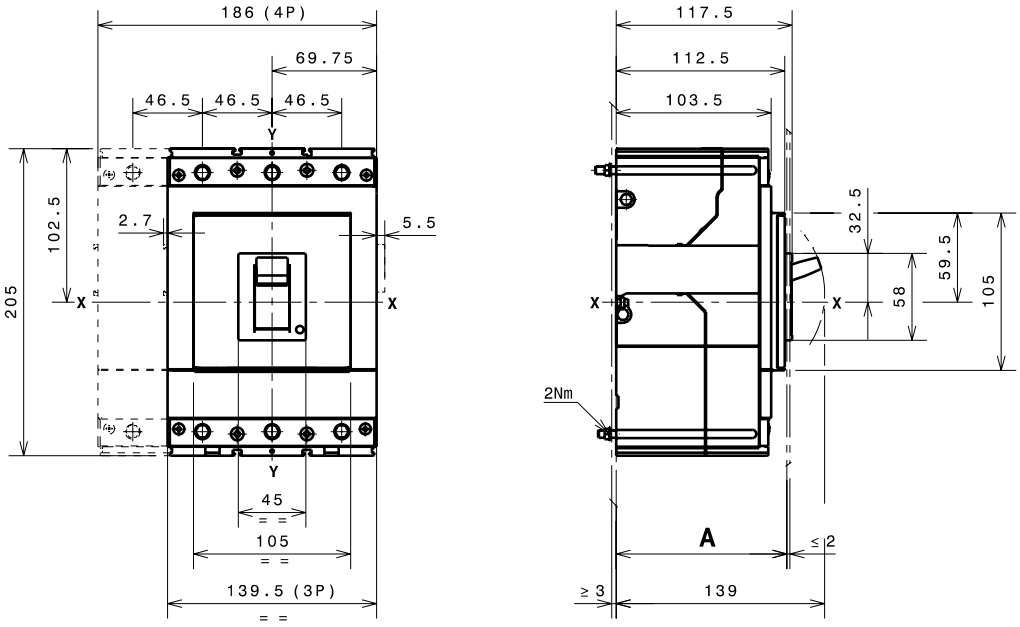

3-4 poles

Distance between compartment door and back of switchboard		A [mm]
Without flange	1p-2p-3p-4p	105
	1p-2p-3p-4p	114

The circuit-breaker installed at:

- A = 69 mm has the front plate around the lever protruding from the compartment door;
- A = 61 mm has the front plate around the lever protruding from the compartment door.

Support sheet drilling templates

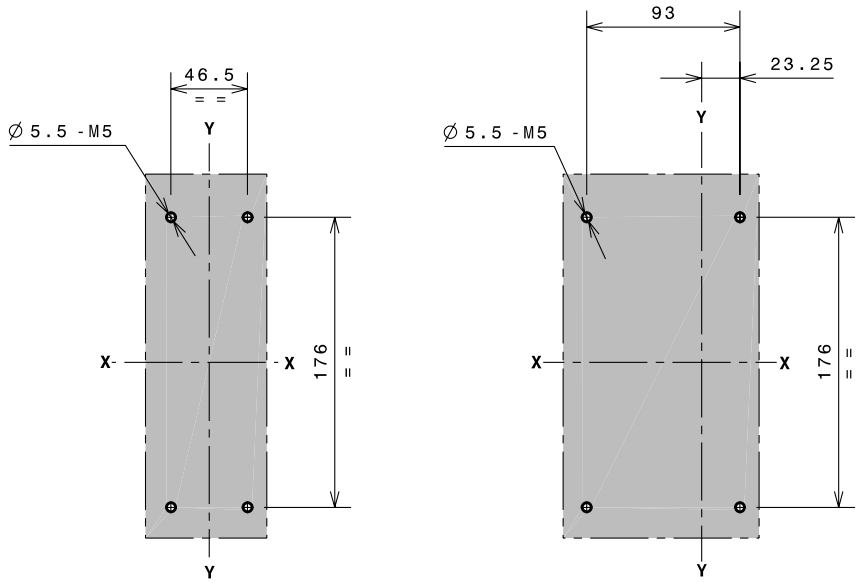

3 poles

4 poles

A3 - Circuit-breaker and terminals

Compartment door drilling templates (without flange)

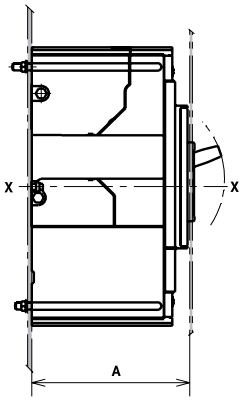

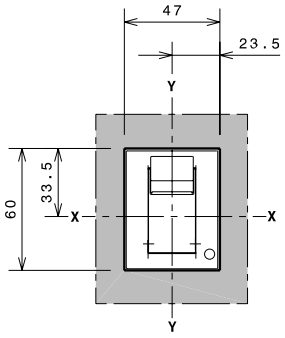

A=114
3-4 poles

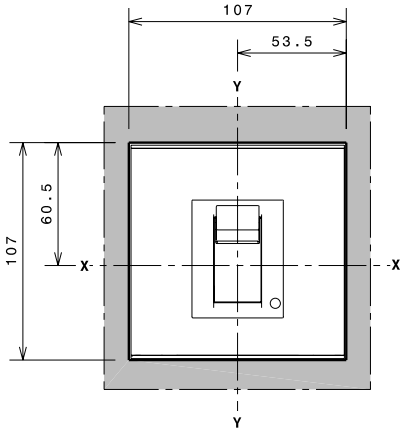

A=105
3-4 poles

F Terminals

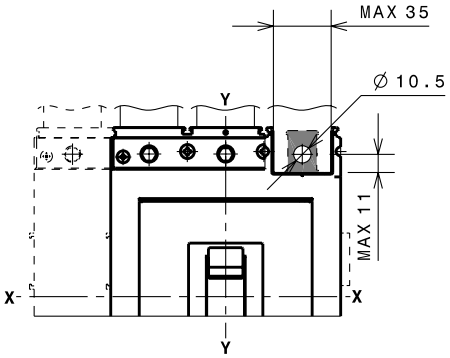

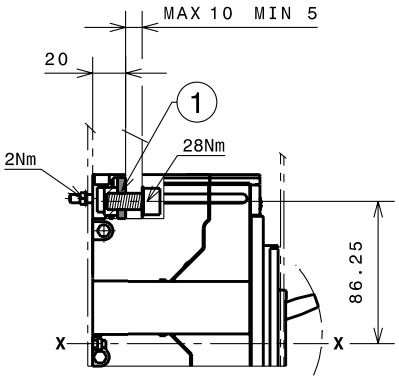

3-4 poles

Caption

1 Front terminals for busbar connection

EF Terminals

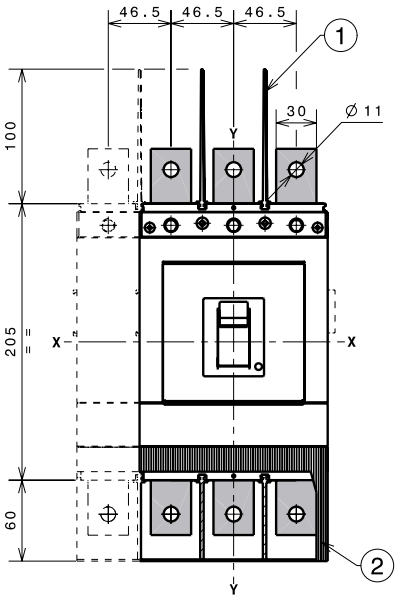

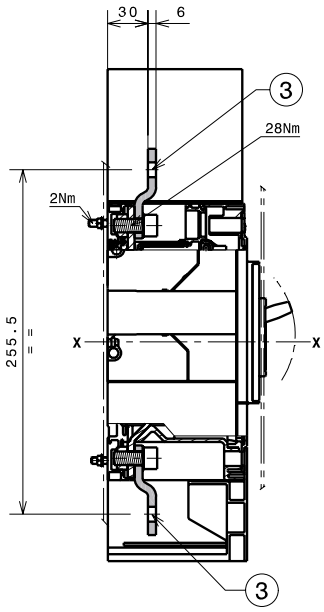

3-4 poles

Caption

1. 100mm phase separators between terminals (compulsory) supplied
2. High terminal covers with degree of protection IP40 (on request)
3. Front extended terminals

ES Terminals

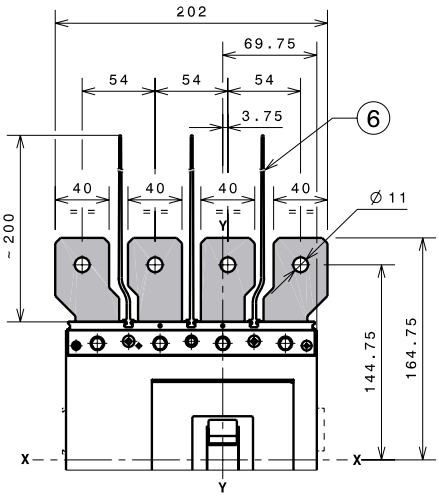

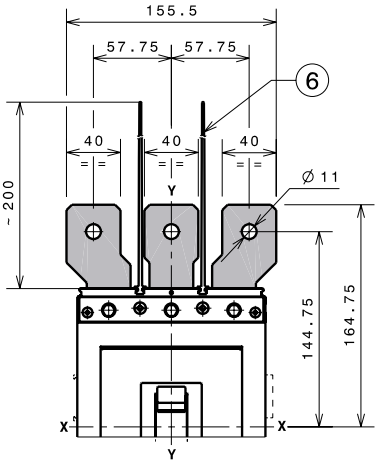

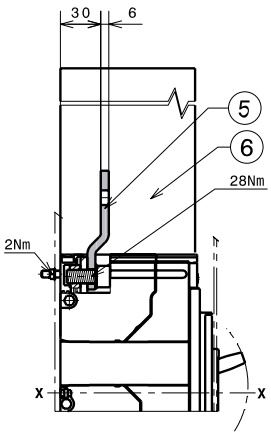

4 poles

3 poles

Caption

5. Front extended spread terminals
6. Phase separators between terminals

A3 - Circuit-breaker and terminals

FCCuAl 1x185...300mm² terminals

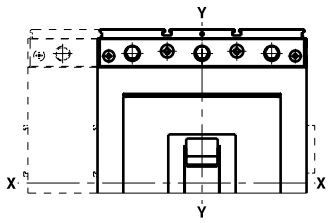

3-4 poles

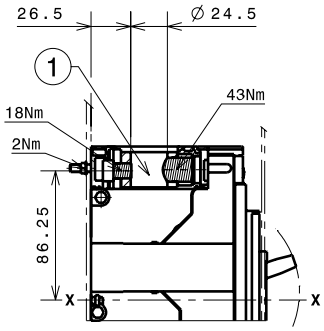

Caption

(1) Front terminals for busbar connection 300mm² CuAl

FCCuAl 2x95...240mm² terminals

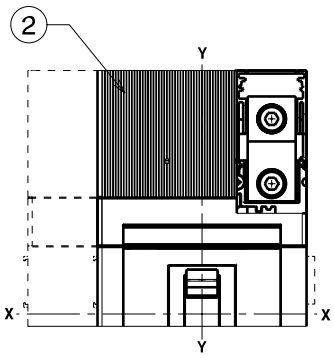

3-4 poles

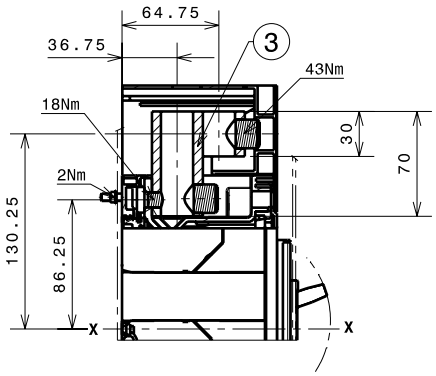

Caption

(1) 60mm high terminal covers

A3 - Accessories

Rotary handle operating mechanism on circuit-breaker + Compartment door drilling template (RHD)

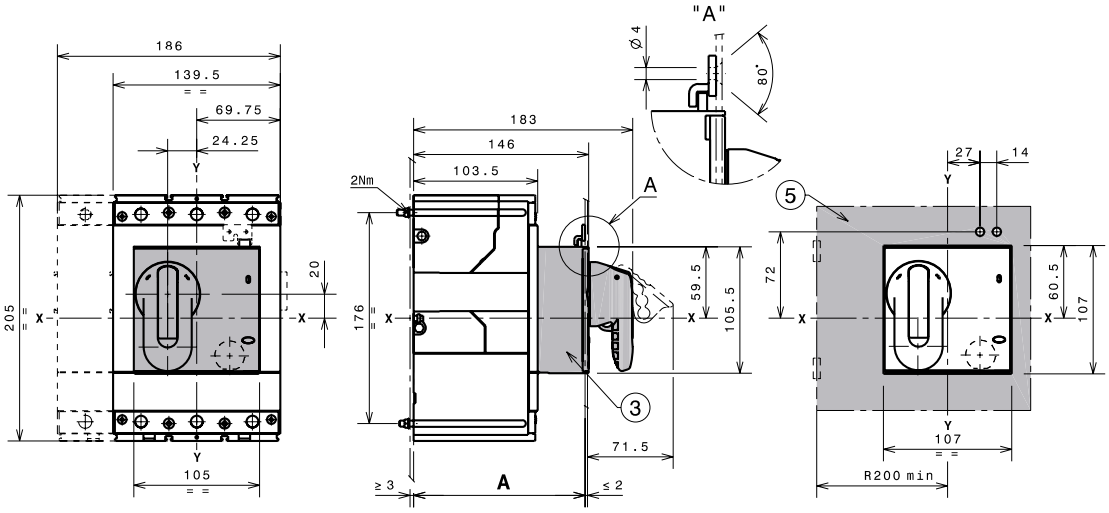

3-4 poles

3-4 poles

Caption

3 Rotary handle operating mechanism on circuit-breaker

5 Drilling template for compartment with direct handle

Rotary handle operating mechanism on compartment door + Compartment door drilling template (RHE)

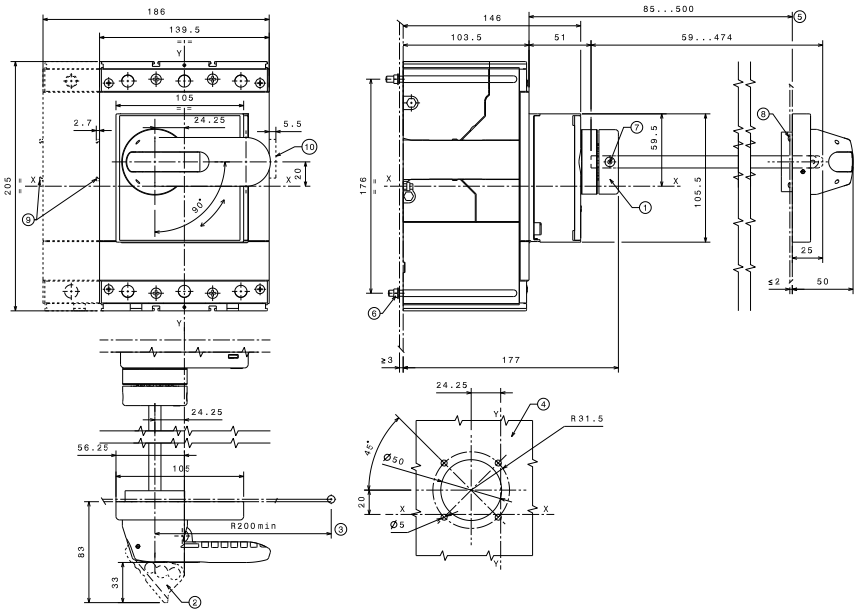

Caption

1 Transmission mechanism

2 Padlock device (max n°3 padlocks Ø max 7mm only in open position to be supplied by the custtomer)

3 Minimum distance from the door hinge

4 Compartment door drilling template

5 Min...max dimension to the front of the door panel

6 Tightening torque 2 Nm

7 Tightening torque ... Nm

8 Tightening torque ... Nm

9 Spacing when equipped with SOR-C, UVR-C, RC221-222

10 Spacing when equipped with AUX-C (3Q 1SY only)

A3 - Accessories

Front for lever operating mechanism (FLD)

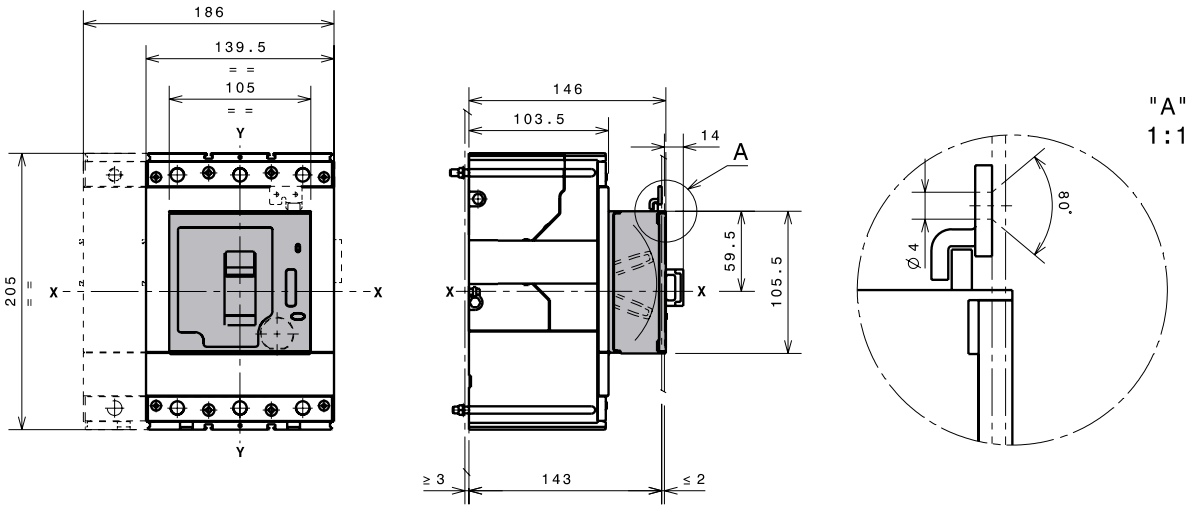

3-4 poles

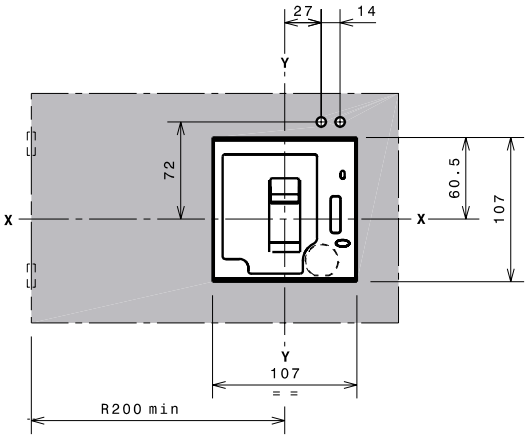

FORMULA Link 250A

FORMULA Link A1 250A

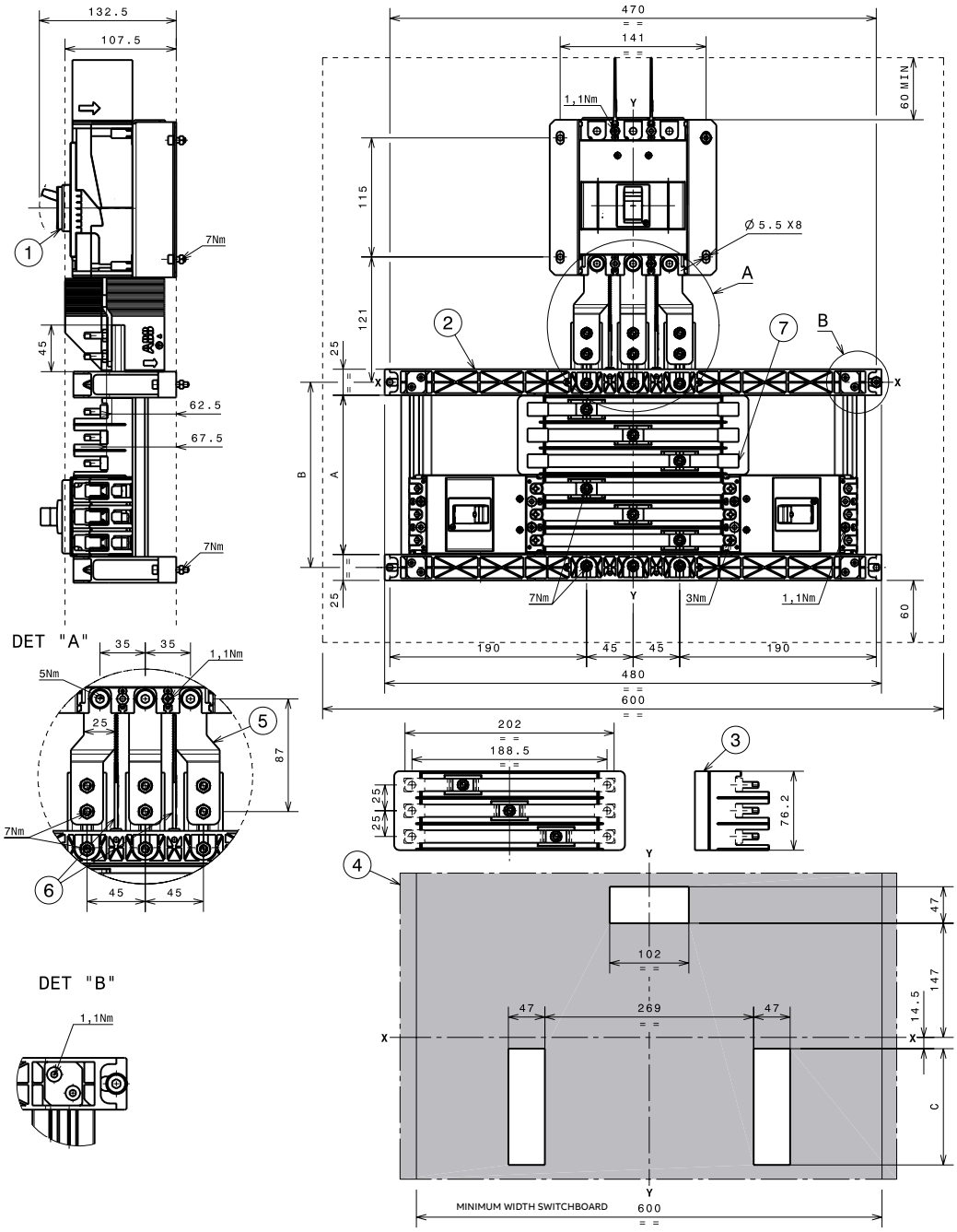

Frame 250A	A [mm]	B [mm]	C [mm]
F1	154	179	150
F2	230.5	255.5	226.5
F3	307.5	332.5	303
F4	384	409	380
F5	461	486	456.5

Caption

1. Main SACE FORMULA DSA A2 250 circuit-breaker
2. Busbar holder for SACE FORMULA DSA A1
3. Outgoing kit connection for SACE FORMULA DSA A1
4. Drilling template for compartment door*
5. Incoming kit connection
6. Phase separators (compulsory) supplied
7. Stopper cover busbar (compulsory without insert circuit-breaker)

* considering all the outgoing circuit-breakers installed

FORMULA Link 400A

FORMULA Link A1-A2 400A

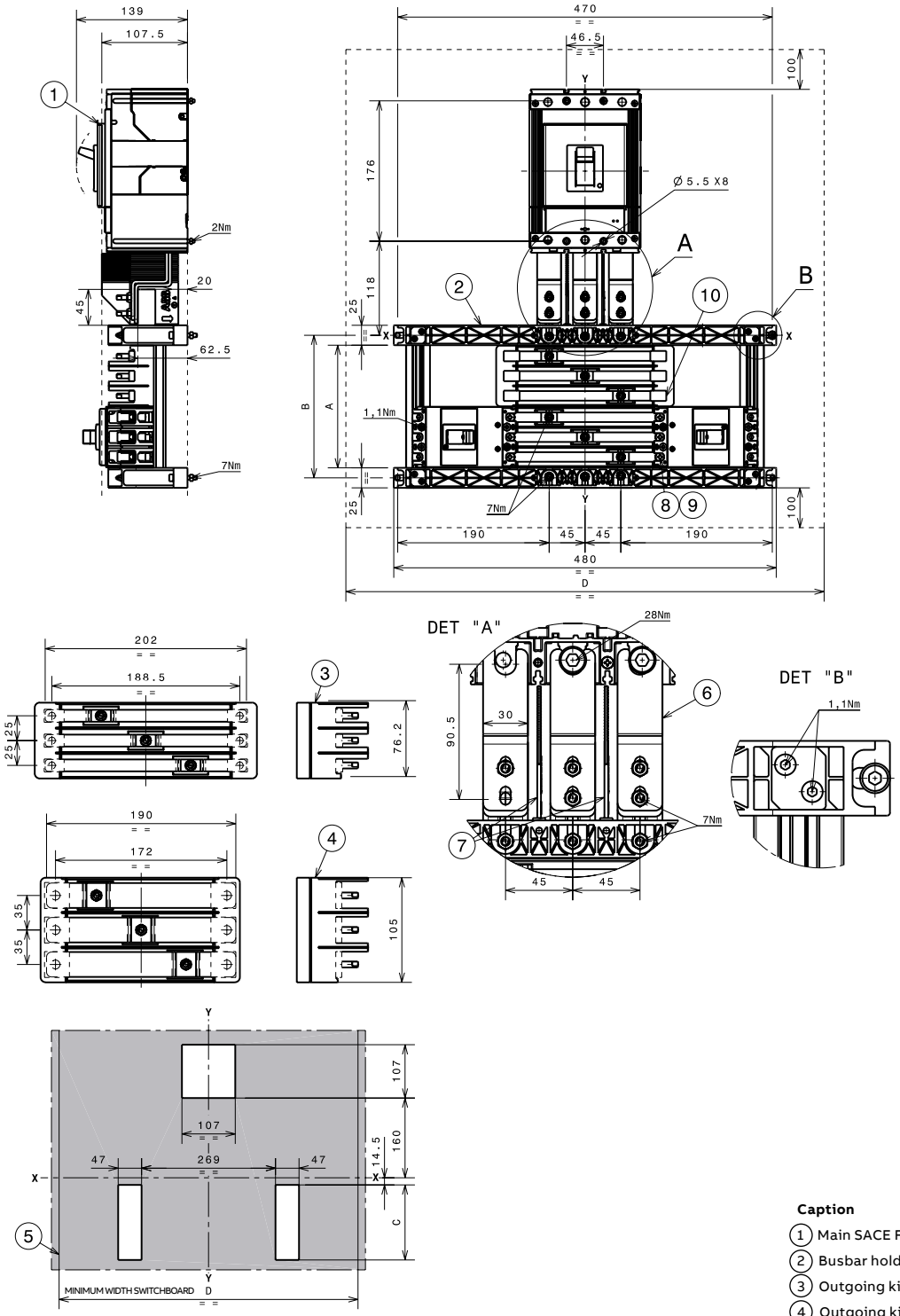

Frame 250A	A [mm]	B [mm]	C [mm]
F1	154	179	150
F2	230.5	255.5	226.5
F3	307.5	332.5	303
F4	384	409	380
F5	461	486	456.5

	With A1 only	With A1 and A2, or A2 only
D	154	179

Caption

1. Main SACE FORMULA DSA A3 400A circuit-breaker
2. Busbar holder
3. Outgoing kit connection SACE FORMULA DSA A1
4. Outgoing kit connection SACE FORMULA DSA A2
5. Compartment door drilling*
6. Incoming kit connection
7. Phase separators (compulsory) supplied
8. Tightening torque: 3 Nm for SACE FORMULA DSA A1
9. Tightening torque: 5 Nm for SACE FORMULA DSA A2
10. Stopper cover busbar (compulsory without insert circuit-breaker)

* considering all the outgoing circuit-breakers installed

FORMULA Link 630A

FORMULA Link A1-A2 630A

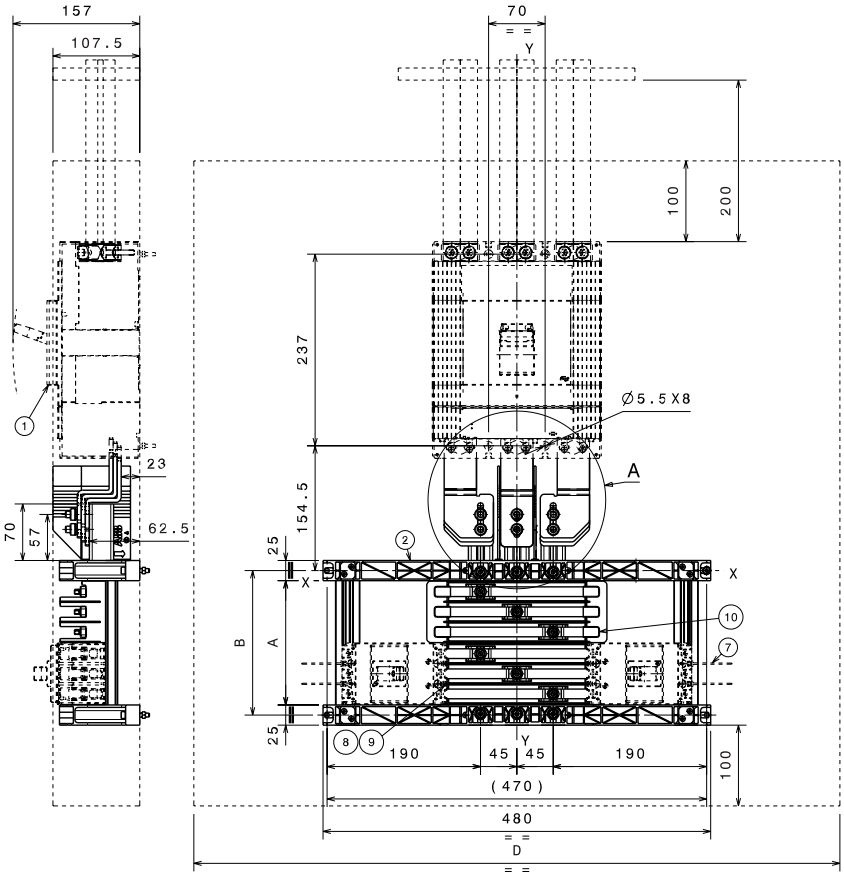

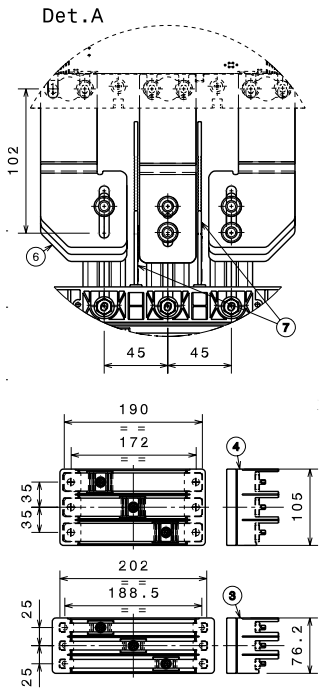

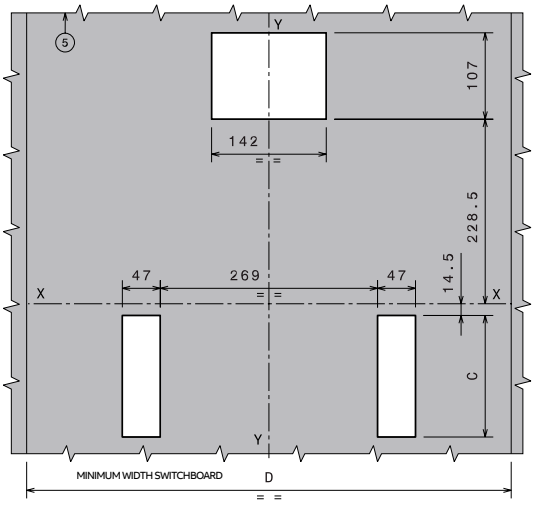

Frame 250A	A [mm]	B [mm]	C [mm]
F1	154	179	150
F2	230.5	255.5	226.5
F3	307.5	332.5	303
F4	384	409	380
F5	461	486	456.5

	With A1 only	With A1 and A2, or A2 only
D	600	800

Caption

1. Main SACE Tmax T6 630A circuit-breaker
2. Busbar holder
3. Outgoing kit connection SACE FORMULA DSA A1
4. Outgoing kit connection SACE FORMULA DSA A2
5. Compartment door drilling*
6. Incoming kit connection
7. Phase separators (compulsory) supplied
8. Tightening torque: 3 Nm for SACE FORMULA DSA A1
9. Tightening torque: 5 Nm for SACE FORMULA DSA A2
10. Stopper cover busbar (compulsory without insert circuit-breaker)

* considering all the outgoing circuit-breakers installed

FORMULA Link 800A

FORMULA Link A1-A2 800A

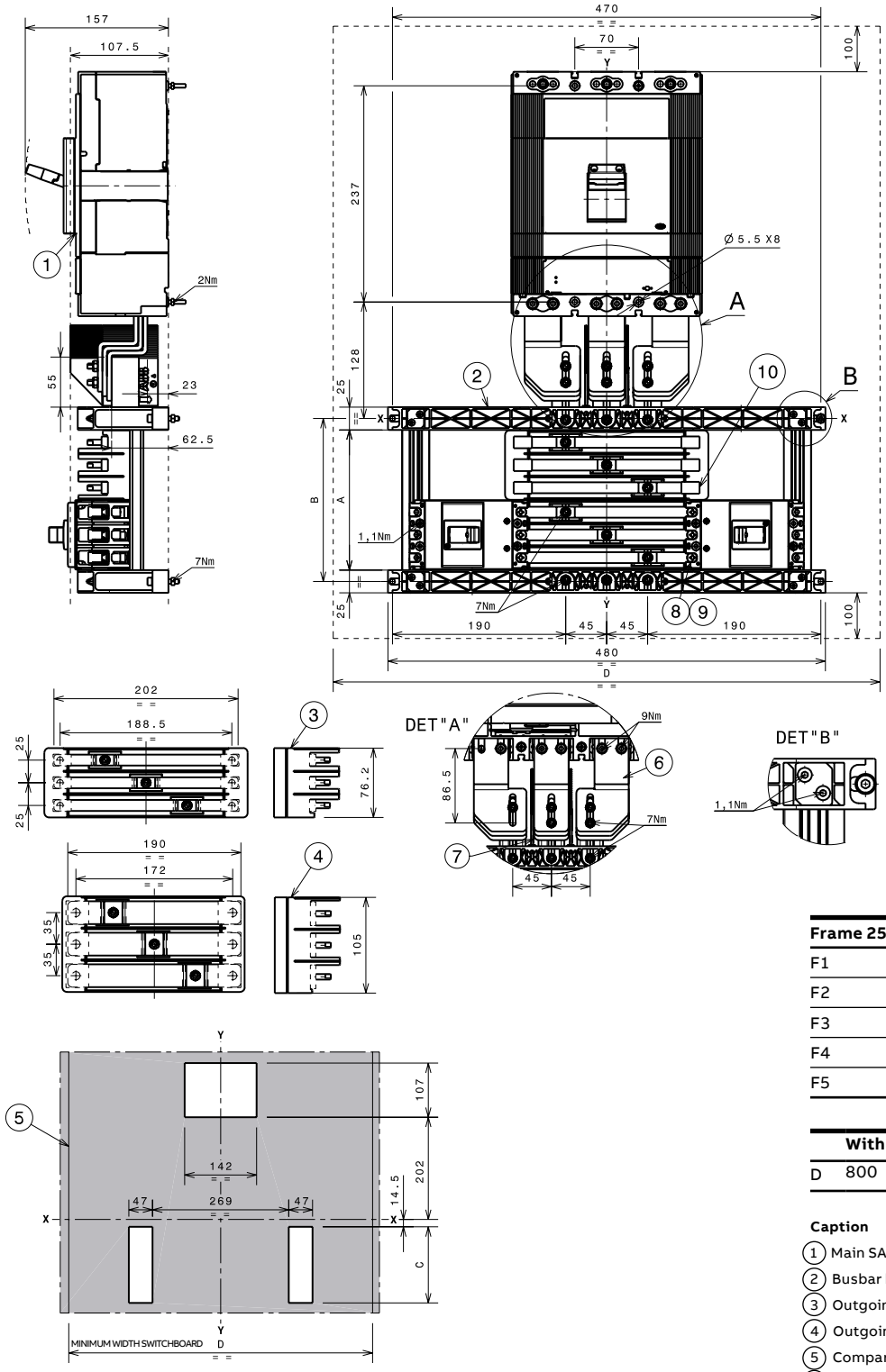

Frame 250A	A [mm]	B [mm]	C [mm]
F1	154	179	150
F2	230.5	255.5	226.5
F3	307.5	332.5	303
F4	384	409	380
F5	461	486	456.5

	With A1 only	With A1 and A2, or A2 only
D	800	800

Caption

1. Main SACE Tmax T6 800A circuit-breaker
2. Busbar holder
3. Outgoing kit connection SACE FORMULA DSA A1
4. Outgoing kit connection SACE FORMULA DSA A2
5. Compartment door drilling*
6. Incoming kit connection
7. Phase separators (compulsory) supplied
8. Tightening torque: 3 Nm for SACE FORMULA DSA A1
9. Tightening torque: 5 Nm for SACE FORMULA DSA A2
10. Stopper cover busbar (compulsory without insert circuit-breaker)

* considering all the outgoing circuit-breakers installed

Distances to be respected

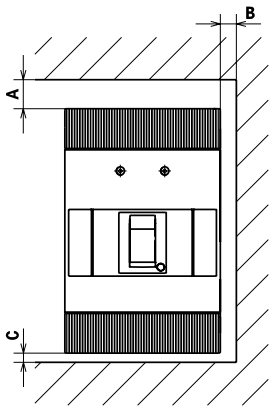

—
Insulation distances to be respected for installation in cubicles

Ue<415V	A [mm]	B [mm]	C [mm]
A1	45	20	35
A2	60	25	60
A3	30	25	25

Ue≥440V	A (mm/in.)	B (mm/in.)	C (mm/in.)
A1	45	20	35
A2	180	25	60
A3	60	25	25

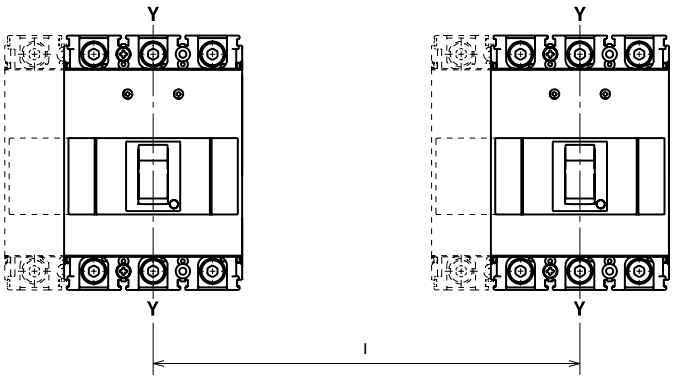

—
Minimum centre distance between two circuit-breakers mounted side-by-side

	Circuit-breaker width [mm]				Center distance I [mm]			
	1-pole	2-poles	3-poles	4-poles	1-pole	2-poles	3-poles	4-poles
A1	25.4	50.8	76.2	101.2	25.4*	50.8*	76.2*	101.2*
A2	–	70	105	140	–	70*	105*	140*
A3	–	–		184	–	–	140**	184**

* For 440V<Ue<550V I 3p=180mm and I 4p=224mm
** With separator to be requested apart and to be inserted between two side-by-side circuit-breakers

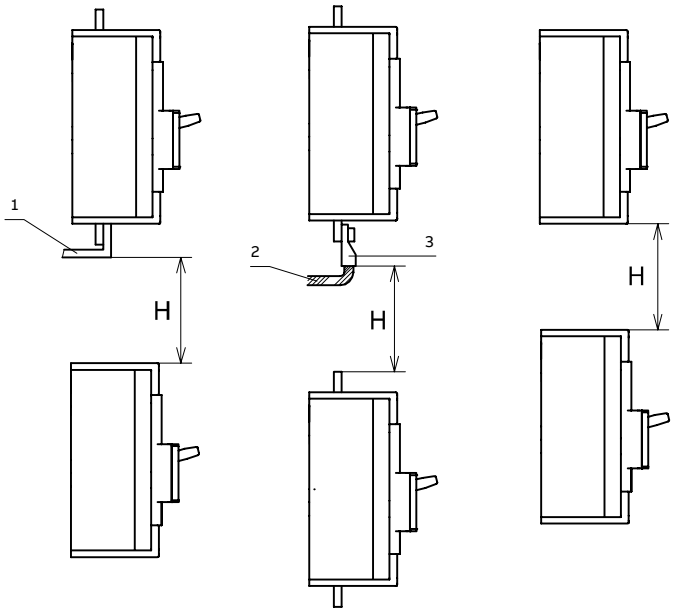

—
Minimum centre distance between two stacked circuit-breakers

	H [mm]	
A1	80	
A2	100 (Ue<415V)	260 (Ue≥415V)
A3	160	

Caption
1. Connection not insulated
2. Insulated cable
3. Cable terminal

Wiring diagrams

6/2 **Reading information and graphic symbols**

6/3 **Wiring diagrams**

6/5 **Electrical accessories**

Reading information and graphic symbols

State of operation represented
The diagrams are shown considering the following conditions:
- Circuit-breaker open
- Circuits without voltage
- Trip unit not tripped

Incompatibility A0 - A1 - A2
The following wiring diagrams for accessories are not relevant to single-pole circuit-breakers.
The wiring diagrams of figures 1-2-6 (to be considered in alternative) can be used for two-pole circuit-breakers.
The other diagrams can be used for three- and four-pole circuit-breakers.
The circuits shown in the following figures cannot be supplied at the same time on the same circuit-breaker:
- 1-2-3-4
- 5-6.

Incompatibility A3
The circuits shown in the following figures cannot be supplied at the same time on the same circuit-breaker:
- 1-2-3-4
- 5-6

Graphic symbols (IEC 60617 and CEI 3-14 to 3-26 Standards)

	Thermal effect
	Electromagnetic effect
	Mechanical connection (link)
	Operated by pushing
	Operated by turning
	Connection of conductors
	Terminal
	Plug and socket (male and female)
	Resistor (general symbol)
	Current transformer

	Make contact
	Break contact
	Change-over break before make contact
	Circuit-breaker with automatic release
	Operating device (general symbol)
	Instantaneous overcurrent or rate-of-rise relay
	Overcurrent relay with inverse long time-lag characteristic

Wiring diagrams

Caption

Q = Main circuit-breaker
K51 = Electronic trip unit ELT LI, with the following protection functions:
– L overload protection with inverse long time-delay trip
– I short-circuit protection with instantaneous time-delay trip
TI/L1 = Current transformer placed on phase L1
TI/L2 = Current transformer placed on phase L2
TI/L3 = Current transformer placed on phase L3
TI/N = Current transformer placed on the neutral
X0 = Connector for the YO1 trip coil
YO1 = Trip coil of the electronic trip unit

Operating status A0

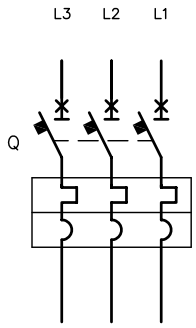

Three-pole circuit-breaker with thermal-magnetic trip unit

Operating status A1

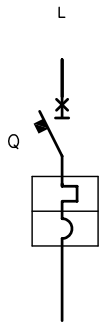

Single-pole circuit-breaker with thermal-magnetic trip unit

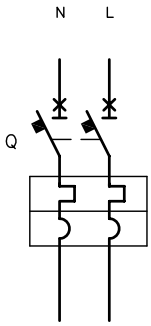

Two-pole circuit-breaker with thermal-magnetic trip unit

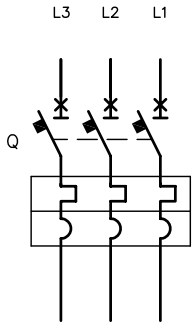

Three-pole circuit-breaker with thermal-magnetic trip unit

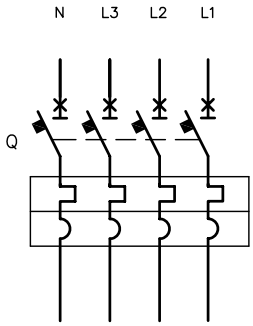

Four-pole circuit-breaker with thermal-magnetic trip unit

Operating status A2

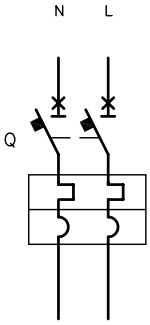

Two-pole circuit-breaker with thermal-magnetic trip unit

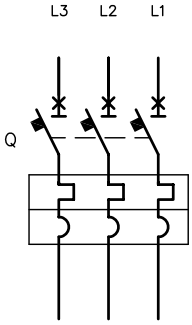

Three-pole circuit-breaker with thermal-magnetic trip unit

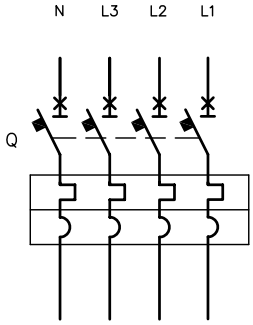

Four-pole circuit-breaker with thermal-magnetic trip unit

Wiring diagrams

Operating status A3

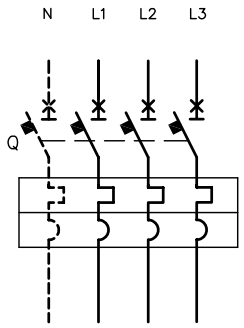

Three-pole/four-pole circuit-breaker with thermal-magnetic trip unit

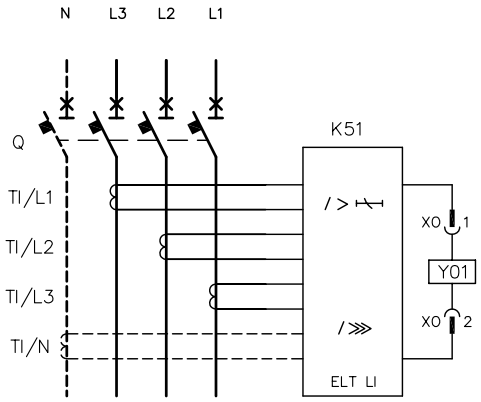

Three-pole/four-pole circuit-breaker with electronic trip unit

Operating status A1 - A2 - A3 MAGNETIC ONLY MF

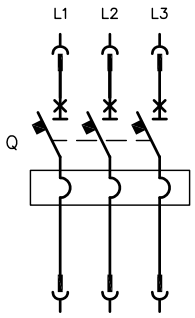

Three-pole circuit-breaker with magnetic trip unit

Operating status A1 - A2 - A3 with ELT I trip unit

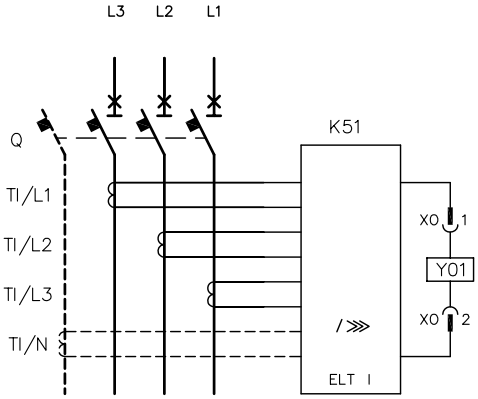

Three-pole circuit-breaker with electronic trip unit ELT I

Electrical accessories

Shunt opening and undervoltage releases A0 - A1 - A2

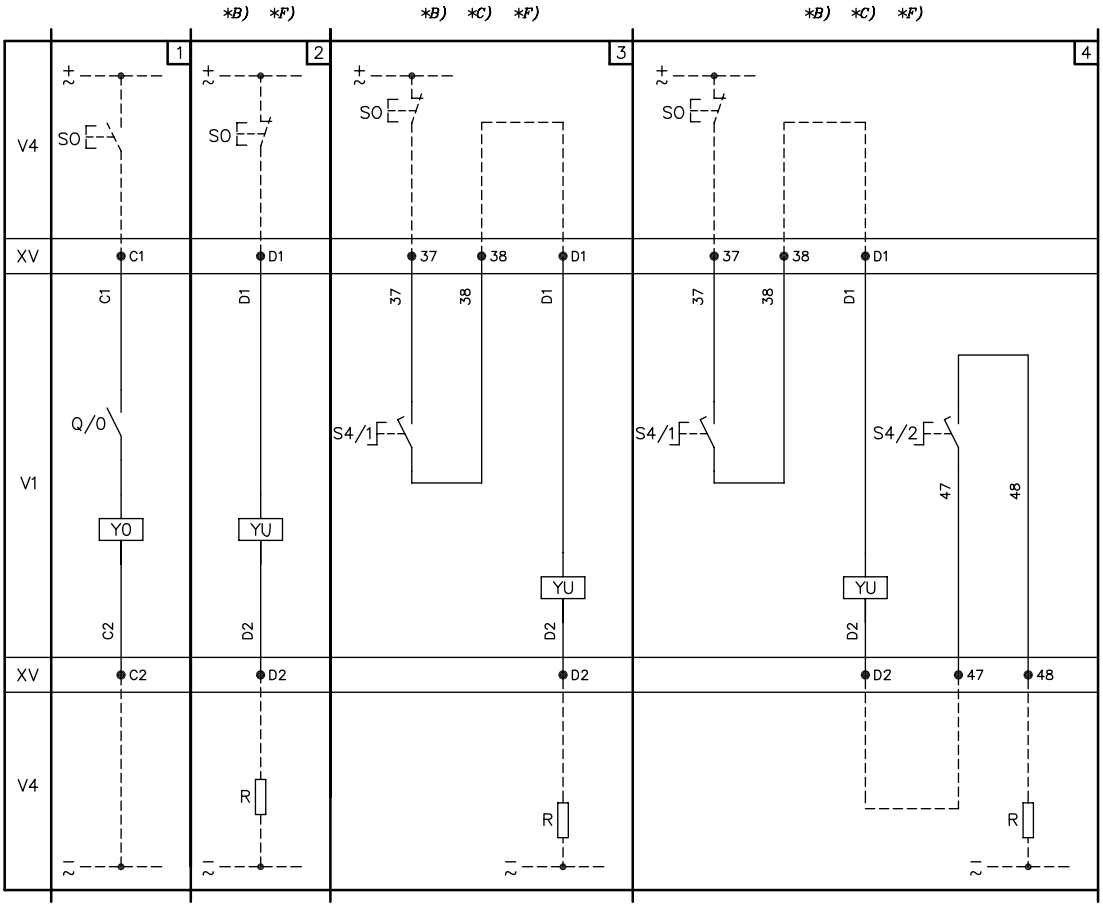

Figure:
1) Shunt opening release (SOR-C o YO)
2) Undervoltage release (UVR-C o YU)
3) Instantaneous undervoltage release with an early contact in series (AUE-C+UVR-C)
4) Instantaneous undervoltage release with two early contacts in series (AUE-C+UVR-C)

Notes
B) The undervoltage release is supplied for power supply branched on the supply side of the circuit-breaker or from an independent source: circuit-breaker closing is only allowed with the release energised (the lock on closing is made mechanically).
C) The S4/1 and S4/2 contacts shown in figures 3-4 open the circuit with circuit-breaker open and close it when a manual closing command is given by means of the rotary handle in accordance with the Standards regarding machine tools (closing does not take place in any case if the undervoltage release is not supplied).
F) Additional external undervoltage resistor supplied at 380/525V AC.

Caption
Q/0 = Circuit-breaker auxiliary contacts
R = Resistor (see note F)
S4/1-2 = Early auxiliary contacts activated by the rotary handle of the circuit-breaker (see note C)
SO = Pushbutton or contact for opening the circuit-breaker
V1 = Circuit-breaker applications
V4 = Indicative apparatus and connections for control and signalling, outside the circuit-breaker
XV = Terminal boards of the applications
YO = Shunt opening release (SOR-C)
YU = Undervoltage release (UVR-C) (see notes B and C)

Electrical accessories

Shunt opening and undervoltage releases A3

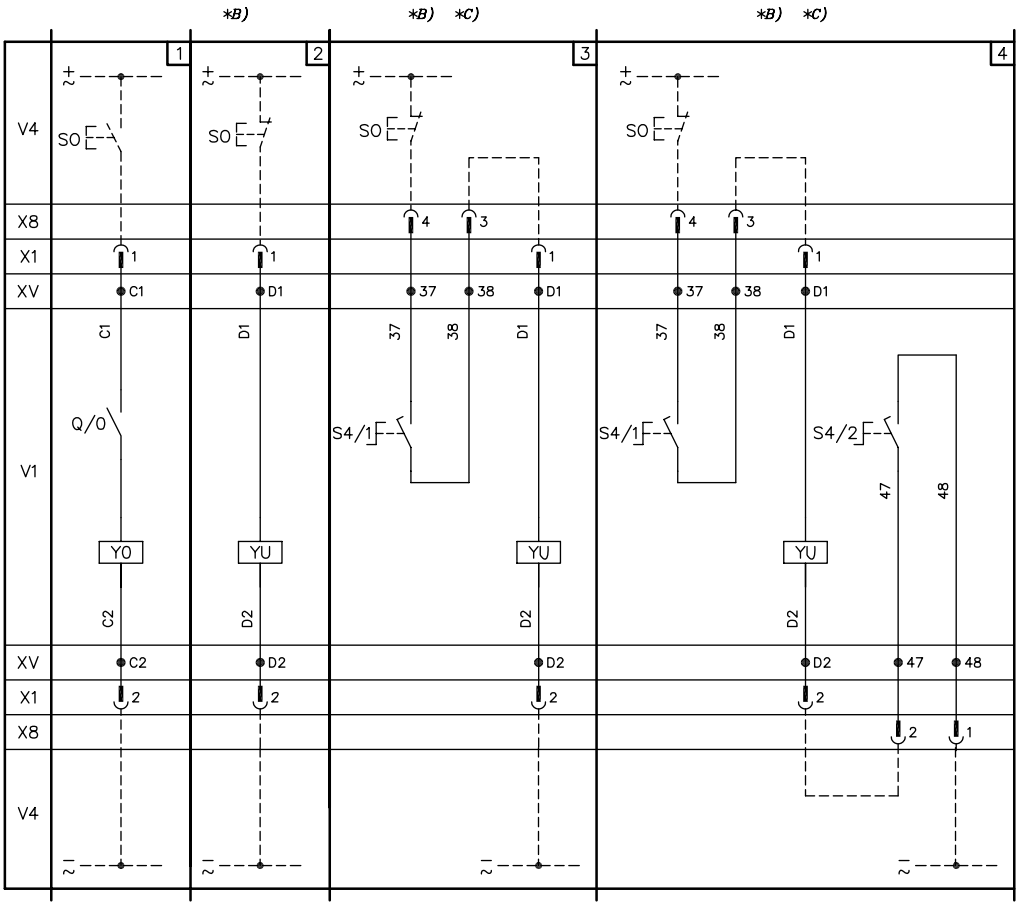

Figure:
1) Shunt opening release (SOR-C o YO)
2) Undervoltage release (UVR-C o YU)
3) Instantaneous undervoltage release with an early contact in series (AUE-C+UVR-C)
4) Instantaneous undervoltage release with two early contacts in series (AUE-C+UVR-C)

Notes
B) The undervoltage release can be supplied branched on the supply side of the circuit-breaker or from an independent source: circuit-breaker closing is only allowed with the release energised (lock on closing is mechanical).
C) The S4/1 and S4/2 contacts shown in figures 3-4 open the circuit with the circuit-breaker open and close it when a manual closing command is given by means of the rotary handle as required by the relevant Standard regarding machine tools (closing does not take place in any case if the undervoltage release is not supplied).

Caption
Q/0 = Circuit-breaker auxiliary contacts
R = Resistor (see note F)
S4/1-2 = Early auxiliary contacts activated by the rotary handle of the circuit-breaker (see note C)
SO = Pushbutton or contact for opening the circuit-breaker
V1 = Circuit-breaker applications
V4 = Indicative apparatus and connections for control and signalling, outside the circuit-breaker
XV = Terminal boards of the applications
YO = Shunt opening release (SOR-C)
YU = Undervoltage release (UVR-C) (see notes B and C)
X1, X8 = Connectors for the circuit-breaker auxiliary circuits

Auxiliary contacts A0 - A1 - A2

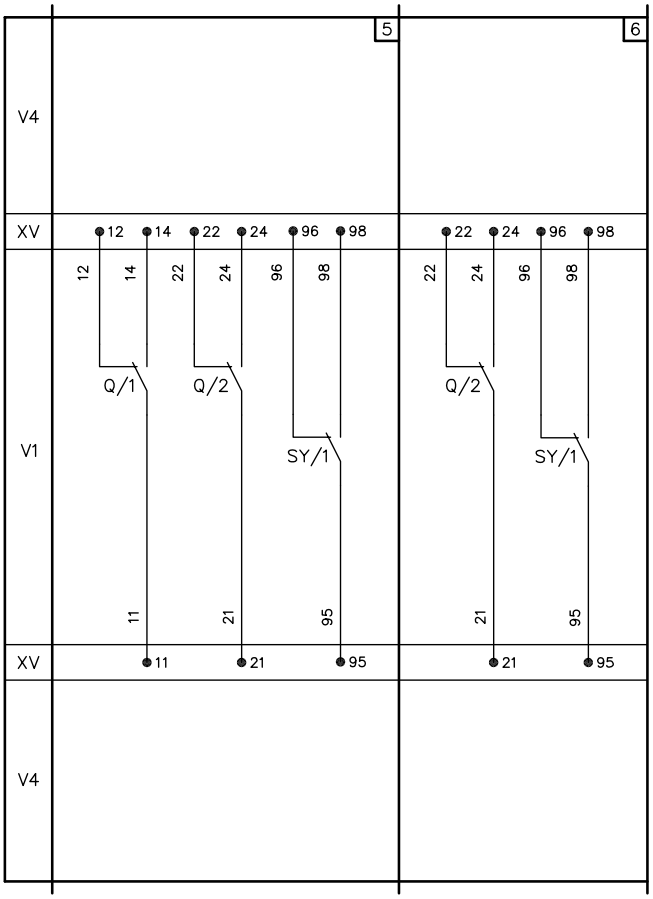

Figure:

5) Two changeover contacts (Q) for electrical signaling of circuit-breaker open/closed and one changeover contact (SY) for signaling of circuit-breaker in tripped position due to the intervention of thermal-magnetic trip unit, or SOR-C, or UVR-C.
6) One changeover contact (Q) for electrical signaling of circuit-breaker open/closed and one changeover contact (SY) for signaling of circuit-breaker in tripped position due to the intervention of thermal-magnetic trip unit, or SOR-C, or UVR-C.

Caption

Q/1, 2 = Circuit-breaker auxiliary contacts
SY = Contact for electrical signaling of circuit-breaker open (tripped position) due to the intervention of thermal-magnetic trip unit, YO (SOR-C) or YU (UVR-C)
V1 = Circuit-breaker applications
V4 = Indicative apparatus and connections for control and signalling, outside the circuit-breaker
XV = Terminal boards

Electrical accessories

Auxiliary contacts A3

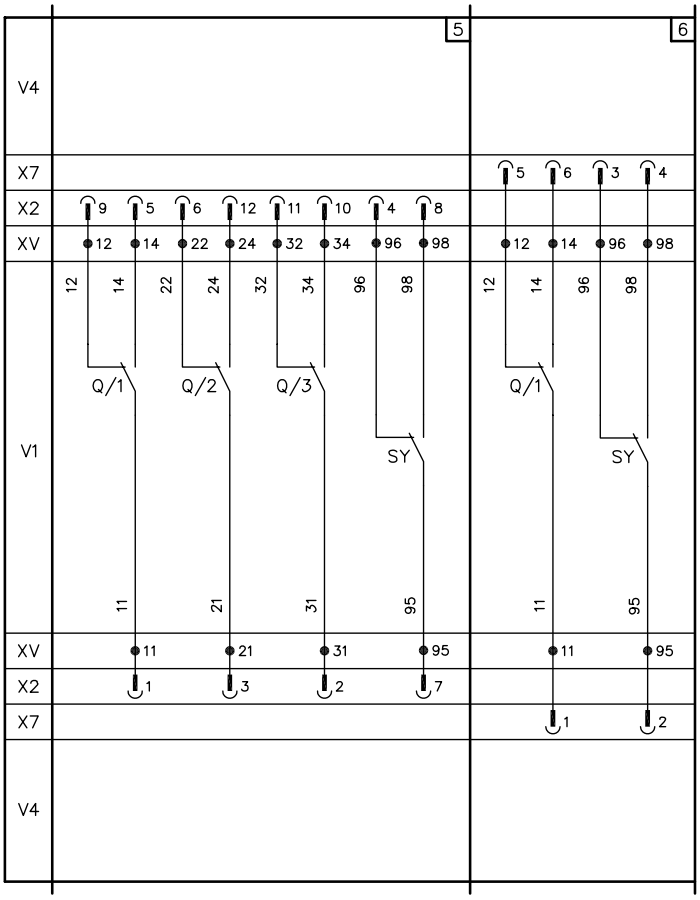

Figure:
5) Three changeover contacts for electrical signalling of circuit-breaker open/closed and one changeover contact for signalling circuit-breaker in tripped position due to thermal-magnetic trip unit, or SOR-C, or UVR-C intervention (3Q + 1SY)
6) One changeover contact for electrical signalling of circuit-breaker open/closed and one changeover contact for signalling circuit-breaker in tripped position due to thermal-magnetic trip unit, or SOR-C, or UVR-C intervention (1Q + 1SY)

Caption
Q/1, 2, 3= Circuit-breaker auxiliary contacts
SY = Contact for electrical signalling circuit-breaker open due to trip of the thermal-magnetic trip unit, or YO (SOR-C), or YU (UVR-C) (tripped position)
V1 = Circuit-breaker applications
V4 = Indicative apparatus and connections for control and signalling, outside the circuit-breaker
XV = Terminal boards
X2, X7 = Connectors for the circuit-breaker auxiliary circuits

—

ABB SACE S.p.A.
Electrification Business Area
Smart Power Division
5, Via Pescaria
I-24123 Bergamo - Italy
Phone: +39 035 395.111

© Copyright 2024 ABB. All rights reserved.
The data and illustrations are not binding. We reserve the right to modify the contents of this document on the basis of technical development of the products, without prior notice.

1SDC210401D0201 - 2024.02