Power Factor Correction

Power Quality

Catalogue 2022
Low Voltage Power Factor Correction Components

se.com/contact

Life Is On | Schneider Electric

Green Premium™

An industry leading portfolio of offers delivering sustainable value

Green Premium

More than 75% of our product sales offer superior transparency on the material content, regulatory information and environmental impact of our products:

- RoHS compliance
- REACh substance information
- Industry leading # of PEP's*
- Circularity instructions

Discover what we mean by green
Check your products!

The Green Premium program stands for our commitment to deliver customer valued sustainable performance. It has been upgraded with recognized environmental claims and extended to cover all offers including Products, Services and Solutions.

CO_2 and P&L impact through… Resource Performance

Green Premium brings improved resource efficiency throughout an asset's lifecycle. This includes efficient use of energy and natural resources, along with the minimization of CO2 emissions.

Cost of ownership optimization through… Circular Performance

We're helping our customers optimize the total cost of ownership of their assets. To do this, we provide IoT-enabled solutions, as well as upgrade, repair, retrofit, and remanufacture services.

Peace of mind through… Well-being Performance

Green Premium products are RoHS and REACh compliant. We're going beyond regulatory compliance with step-by-step substitution of certain materials and substances from our products.

Improved sales through… Differentiation

Green Premium delivers strong value propositions through third-party labels and services. By collaborating with third-party organizations we can support our customers in meeting their sustainability goals such as green building certifications.

*PEP: Product Environmental Profile (i.e. Environmental Product Declaration)

Our solutions….

Reactive energy management

In electrical networks, reactive energy results in increased line currents for a given active energy transmitted to loads.

The main consequences are:

- Need for oversizing of transmission and distribution networks by utilities,
- Increased voltage drops and sags along the distribution lines,
- Additional power losses.

This results in increased electricity bills for industrial customers because of:

- Increased overall kVA demand,
- Increased energy consumption within the installations.
- Penalties applied by most utilities on reactive energy.

Reactive energy management aims to optimize your electrical installation by reducing energy consumption, and to improve power availability.

Reactive energy management ensures better utilization of electrical machines, optimized electrical conductor sizes and reduced penalties from the utilities. Availability of more energy at utilities ensures in the reduction of total Co_2 emissions for a sustainable future.

Utility power bills are typically reduced by 5 % to 10 %.

+

"Our energy con-sumption was reduced by **9 %** after we installed 10 capacitor banks with detuned reactors. Electricity bill optimised by 8 % and payback in 2 years."

A leading automotive parts manufacturer from France.

"Energy consumption reduced by **5 %** with LV capacitor bank and active filter installed."

A leading Transportation system provider from Switzerland.

"70 capacitor banks with detuned reactors installed, energy consumption reduced by 10 %, electrcity bill optimised by 18 %, payback in just **1 year.**"

Largest Airport of Spain.

"Our network performance improved significantly after we installed 225 LV Detuned capacitor banks. The capacitor banks incorporates advanced metering system and remote communication ensures continued operation and minimal down time."

Ministry of Electricity and Water, Kuwait.

Improve electrical networks and reduce energy costs

Power Factor Correction

Every electric machine needs active power (kW) and reactive power (kvar) to operate. The power rating of the installation in kVA is the combination of both:
$(kVA)^2 = (kW)^2 + (kvar)^2$.

The Power Factor has been defined as the ratio of active power (kW) to apparent power (kVA).

Power Factor = (kW) / (kVA).

The objective of Reactive Energy management is improvement of Power Factor, or "Power Factor Correction".

The principle of **"Power Factor Correction"** (or "Reactive Energy compensation") is to generate the reactive power close to the load, so that the supply source could be relieved. when connected with the loads,**Capacitors banks** are most commonly used in electrical network to supply reactive energy.

In Electrical networks, all inductive equipment's i.e. Motors, Generators etc. absorb energy from network to create the magnetic field during excitation.

With this exchange of energy an additional consumption is used which is not useful.

This energy is called "**Reactive**" and measured in **kvar**.

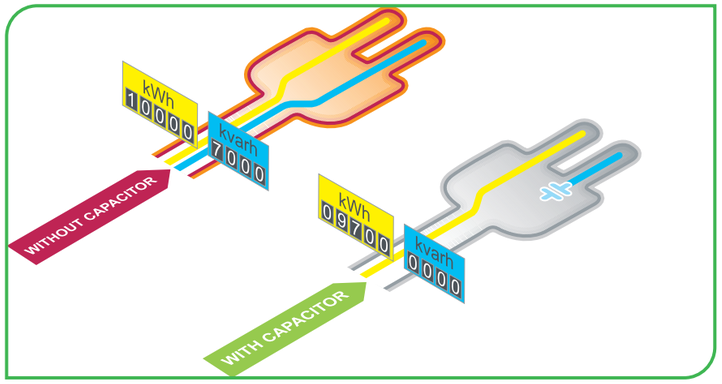

Ensure Safety, Reliability and Performance for Installations

Safety

- Designed as per IEC 60831-1 & 2 with safety features integrated in Each phase
- Over-pressure system for safe disconnection of capacitor at the end of life
- All Component and materials are free of PCB pollutants

Quality and Reliability

- Continuity of Service thanks to the high performance and long life expectancy of Capacitors.
- 100% testing on each capacitor in manufacturing plant
- Design and Production with the highest international standards.

Efficiency and Productivity

- Product development including innovation in ergonomics and ease of installation and connection.
- Specially designed components to save time on installation and maintenance.
- All components and solutions available through a network of distributors and partners in more than 100 countries.

Thanks to the know-how developed over 50 years, Schneider Electric ranks as the global specialist in Energy management providing a unique and comprehensive portfolio.
Schneider Electric helps you to make the most of your energy with innovative, reliable and safe solutions.

Quality & Environment

ISO 18001, OSHAS include green buliding also (IGBC)

A major strength

In each of its units, Schneider Electric has an operating organization whose main role is to verify quality and ensure compliance with standards. This procedure is:

- compliance to Global Schneider Production System;
- recognized by many customers and official organizations.

However, its strict application has made it possible to obtain the recognition of independent organizations.

The quality system for design and manufacturing is certified in compliance with the requirements of the OSHAS, ISO 9001, ISO 14001 and ISO 18001 Quality Assurance model.

Stringent, systematic controls

During manufacturing each product and equipment undergoes systematic item undergoes systematic routine tests to verify its quality and compliance:

- measurement of operating capacity and tolerances;
- measurement of losses;
- dielectric testing;
- checks on safety and locking systems;
- checks on low-voltage components;
- verification of compliance with drawings and diagrams.

The results obtained are recorded and maintained by the Quality Control Department on the specific test certificate for each device.

RoHS, REACh Compliance

All LV PFC Components of Schneider Electric are RoHS, REACh Compliant.

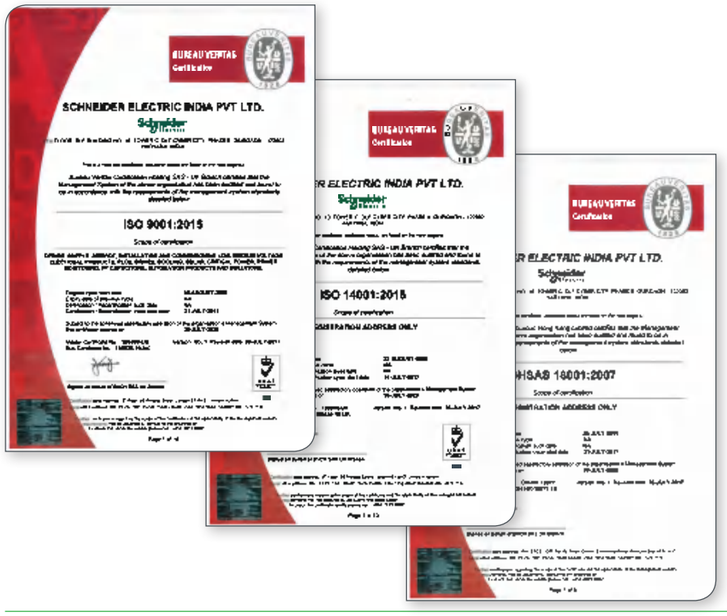

Schneider Electric undertakes to reduce the energy bill and CO_2 emissions of its customers by proposing products, solutions and services which fit in with all levels of the energy value chain.
The Power Factor Correction and harmonic filtering offer form part of the energy efficiency approach.

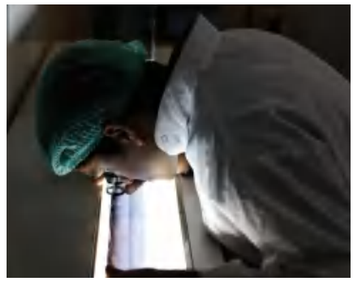

A New, Safer and Robust solution for building your electrical installations

A comprehensive offer

Power Factor Correction and harmonic filtering form part of a comprehensive offer of products perfectly coordinated to meet all low-voltage power distribution needs.
Use of these products in the electrical installation will result in:

- improved continuity of service;
- reduced power losses;
- guarantee of scalability;
- efficient energy monitoring and management.

Thus enabling customer to have all the expertise and creativity for Optimized, reliable, expendable and compliant installation.

Tools for easier design and setup

With Schneider Electric, you have a complete range of Online configuration tools that support you in the knowledge and setup of products, all this in compliance with the standards in force and standard engineering practice.
These tools, technical notebooks and guides, design aid software, training courses, etc. are regularly updated.

Schneider Electric joins forces with your expertise and your creativity for optimized, reliable, expandable and compliant installations.

Because each electrical installation is a specific case, there is no universal solution.
The variety of combinations available allows you to achieve genuine customization of technical solutions.
You can express your creativity and highlight your expertise in the design, development and operation of an electrical installation.

General contents

Power Factor Correction guideline 3

Low Voltage capacitors 15

Detuned reactors 49

Power Factor controllers 55

Contactors 63

Appendix 69

Contents

Presentation

Why reactive energy management? 4

Method for determining compensation 6

Low Voltage capacitors with detuned reactors 10

Rated voltage and current 11

Capacitor selection guide 12

Construction of references Principle 13

Low Voltage capacitors 15
Detuned reactors 49
Power Factor controllers 55
Contactors 63
Appendix 69

Why reactive energy management?

Principle of reactive energy management

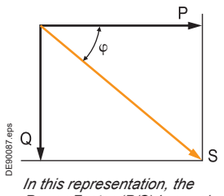

In this representation, the Power Factor (P/S) is equal to cosφ.

All AC electrical networks consume two types of power: active power (kW) and reactive power (kvar):

- **The active power P** (in kW) is the real power transmitted to loads such as motors, lamps, heaters, computers, etc. The electrical/active power is transformed into mechanical power, heat or light.
- **The reactive power Q** (in kvar) is used only to power the magnetic circuits of machines, motors and transformers.

The apparent power S (in kVA) is the vector combination of active and reactive power.

The circulation of reactive power in the electrical network has major technical and economic consequences. For the same active power P, a higher reactive power means a higher apparent power, and thus a higher current must be supplied.

The circulation of active power over time results in active energy (in kWh). The circulation of reactive power over time results in reactive energy (kvarh).

In an electrical circuit, the reactive energy is supplied in addition to the active energy.

Due to this higher supplied current, the circulation of reactive energy in distribution networks results in:

> Overload of transformers
> Higher temperature rise in power cables
> Additional losses
> Large voltage drops
> Higher energy consumption and cost
> Less distributed active power.

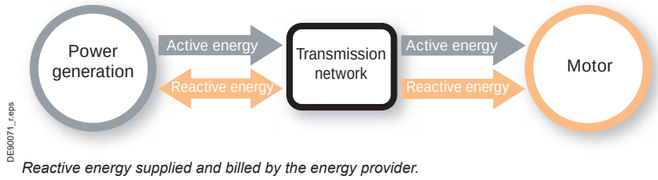

Reactive energy supplied and billed by the energy provider.

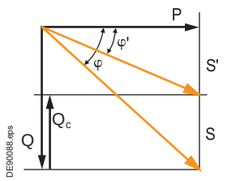

For these reasons, there is a great advantage in generating reactive energy at the load level in order to prevent the unnecessary circulation of current in the network. This is what is known as "**power factor correction**". This is obtained by the connection of capacitors, which produce reactive energy in opposition to the energy absorbed by loads such as motors.

The result is a reduced apparent power, and an improved power factor P/S' as illustrated in the diagram opposite.

The power generation and transmission networks are partially relieved, reducing power losses and making additional transmission capacity available.

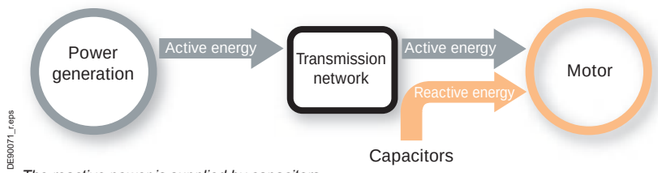

The reactive power is supplied by capacitors.
No billing of reactive power by the energy supplier.

Why reactive energy management?

Benefits of reactive energy management

Optimized management of reactive energy brings economic and technical advantages.

Savings on the electricity bill

> Eliminating penalties on reactive energy and decreasing kVA demand.
> Reducing power losses generated in the transformers and conductors of the installation.

Example:
Loss reduction in a 630 kVA transformer PW = 6,500 W with an initial Power Factor = 0.7.
With power factor correction, we obtain a final Power Factor = 0.98.
The losses become: 3,316 W, i.e. a reduction of 49 %.

Increasing available power

A high power factor optimizes an electrical installation by allowing better use of the components. The power available at the secondary of a MV/LV transformer can therefore be increased by fitting power factor correction equipment on the low voltage side.

The table opposite shows the increased available power at the transformer output through improvement of the Power Factor from 0.7 to 1.

Power factor	Increased available power
0.7	0%
0.8	+14%
0.85	+21%
0.90	+28%
0.95	+36%
1	+43%

Reducing installation size

Installing power factor correction equipment allows conductor cross-section to be reduced, since less current is absorbed by the compensated installation for the same active power.

The opposite table shows the multiplying factor for the conductor cross-section with different power factor values.

Power factor	Cable cross-section multiplying factor
1	1
0.80	1.25
0.60	1.67
0.40	2.50

Reducing voltage drops in the installation

Installing capacitors allows voltage drops to be reduced upstream of the point where the power factor correction device is connected. This prevents overloading of the network and reduces harmonics, so that you will not have to overrate your installation.

Method for determining compensation

The selection of Power Factor Correction equipment can follow a 4-step process:

- **Calculation of the required reactive energy.**
- **Selection of the compensation mode:**
  - Central, for the complete installation
  - By sector
  - For individual loads, such as large motors.
- **Selection of the compensation type:**
  - Fixed, by connection of a fixed-value capacitor bank;
  - Automatic, by connection of a different number of steps, allowing adjustment of the reactive energy to the required value;
  - Dynamic, for compensation of highly fluctuating loads.
- **Allowance for operating conditions and harmonics.**

Step 1: Calculation of the required reactive power

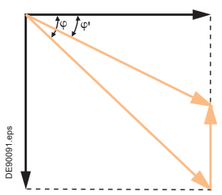

The objective is to determine the required reactive power Q_c (kvar) to be installed, in order to improve the power factor cos φ and reduce the apparent power S.

For φ' < φ, we obtain: cos φ' > cos φ and tan φ' < tan φ.

This is illustrated in the diagram opposite.

Qc can be determined from the formula Qc = P. (tan φ - tan φ'), which is deduced from the diagram.
Q_c = power of the capacitor bank in kvar.
P = active power of the load in kW.
tan φ = tangent of phase shift angle before compensation.
tan φ' = tangent of phase shift angle after compensation.

The parameters φ and tan φ can be obtained from billing data, or from direct measurement in the installation.

The following table can be used for direct determination.

Before compensation		Reactive power (kvar) to be installed per kW of load, in order to get the required cos φ' or tan φ'						
	tan φ'	0.75	0.62	0.48	0.41	0.33	0.23	0.00
	cos φ'	0.80	0.85	0.90	0.925	0.95	0.975	1.000
tan φ	cosφ							
1.73	0.5	0.98	1.11	1.25	1.32	1.40	1.50	1.73
1.02	0.70	0.27	0.40	0.54	0.61	0.69	0.79	1.02
0.96	0.72	0.21	0.34	0.48	0.55	0.64	0.74	0.96
0.91	0.74	0.16	0.29	0.42	0.50	0.58	0.68	0.91
0.86	0.76	0.11	0.24	0.37	0.44	0.53	0.63	0.86
0.80	0.78	0.05	0.18	0.32	0.39	0.47	0.57	0.80
0.75	0.80		0.13	0.27	0.34	0.42	0.52	0.75
0.70	0.82		0.08	0.21	0.29	0.37	0.47	0.70
0.65	0.84		0.03	0.16	0.24	0.32	0.42	0.65
0.59	0.86			0.11	0.18	0.26	0.37	0.59
0.54	0.88			0.06	0.13	0.21	0.31	0.54
0.48	0.90				0.07	0.16	0.26	0.48

Example: consider a 1000 kW motor with cos φ = 0.8 (tan φ = 0.75).
In order to obtain cos φ = 0.95, it is necessary to install a capacitor bank with a reactive power equal to k x P, i.e.: Qc = 0.42 x 1000 = 420 kvar.

Method for determining compensation

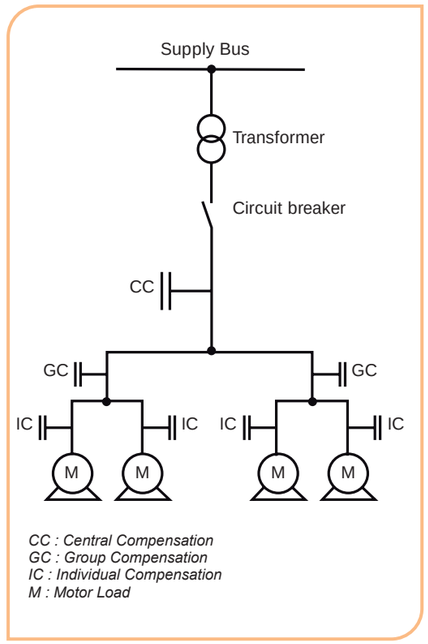

Step 2: Selection of the compensation mode

The location of low-voltage capacitors in an installation constitutes the mode of compensation, which may be central (one location for the entire installation), by sector (section-by-section), at load level, or some combination of the latter two. In principle, the ideal compensation is applied at a point of consumption and at the level required at any moment in time.

In practice, technical and economic factors govern the choice.

The location for connection of capacitor banks in the electrical network is determined by:

- th e overall objective (avoid penalties on reactive energy relieve transformer or cables, avoid voltage drops and sags)
- the operating mode (stable or fluctuating loads)
- the foreseeable influence of capacitors on the network characteristics
- the installation cost.

Central compensation

The capacitor bank is connected at the head of the installation to be compensated in order to provide reactive energy for the whole installation. This configuration is convenient for a stable and continuous load factor.

Group compensation (by sector)

The capacitor bank is connected at the head of the feeders supplying one particular sector to be compensated. This configuration is convenient for a large installation, with workshops having different load factors.

Compensation of individual loads

The capacitor bank is connected right at the inductive load terminals (especially large motors). This configuration is very appropriate when the load power is significant compared to the subscribed power.
This is the ideal technical configuration, as the reactive energy is produced exactly where it is needed, and adjusted to the demand.

Method for determining compensation

Step 3: Selection of the compensation type

Different types of compensation should be adopted depending on the performance requirements and complexity of control:
- Fixed, by connection of a fixed-value capacitor bank
- Automatic, by connection of a different number of steps, allowing adjustment of the reactive energy to the required value
- Dynamic, for compensation of highly fluctuating loads.

Fixed compensation

This arrangement uses one or more capacitor(s) to provide a constant level of compensation. Control may be:
- Manual: by circuit-breaker or load-break switch
- Semi-automatic: by contactor
- Direct connection to an appliance and switched with it.

These capacitors are installed:
- At the terminals of inductive loads (mainly motors)
- At busbars supplying numerous small motors and inductive appliances for which individual compensation would be too costly
- In cases where the load factor is reasonably constant.

Automatic compensation

This kind of compensation provides automatic control and adapts the quantity of reactive power to the variations of the installation in order to maintain the targeted cos j. The equipment is installed at points in an installation where the active-power and/or reactive-power variations are relatively large, for example:
- on the busbars of a main distribution switchboard
- on the terminals of a heavily-loaded feeder cable.

Where the kvar rating of the capacitors is less than or equal to 15 % of the power supply transformer rating, a fixed value of compensation is appropriate. Above the 15 % level, it is advisable to install an automatically-controlled capacitor bank.

Control is usually provided by an electronic device (Power Factor Controller) which monitors the actual power factor and orders the connection or disconnection of capacitors in order to obtain the targeted power factor. The reactive energy is thus controlled by steps. In addition, the Power Factor Controller provides information on the network characteristics (voltage amplitude and distortion, power factor, actual active and reactive power …) and equipment status. Alarm signals are transmitted in case of malfunction.

Connection is usually provided by contactors. For compensation of highly fluctuating loads use of active filters or Electronic Var Compensators(EVC) are recommened. Contact Schneider Electric for electronic compensation solutions.

Dynamic compensation

This kind of compensation is required when fluctuating loads are present, and voltage fluctuations have to be prevented. The principle of dynamic compensation is to associate a fixed capacitor bank and an electronic var compensator, providing either leading or lagging reactive currents. The result is continuously varying fast compensation, perfectly suitable for loads such as lifts, crushers, spot welding, etc.

Method for determining compensation

To know more about the influence of harmonics in electrical installations, see appendix page 61

Step 4: Allowing for operating conditions and harmonics

Capacitors should be selected depending on the working conditions expected during their lifetime.

Allowing for operating conditions

The operating conditions have a great influence on the life expectancy of capacitors. The following parameters should be taken into account:
- Ambient Temperature (°C)
- Expected over-current, related to voltage disturbances, including maximum sustained overvoltage
- Maximum number of switching operations/year
- Required life expectancy.

Allowing for harmonics

Depending on the magnitude of harmonics in the network, different configurations should be adopted.
- **Standard** capacitors: when no significant non-linear loads are present.
- **Harmonic** rated capacitors used with detuned reactors. Applicable when a significant number of non-linear loads are present. Reactors are necessary in order to prevent the amplification of harmonic currents and avoid resonance.
- **Active filters**: when non-linear loads are predominant, use of active filters are recommended for harmonic mitigation. Solutions can be recommended based on computer simulations or on site measurement of the network.

Capacitor selection

Different ranges with different levels of ruggedness are proposed:
- **"EasyLogic™"**: Capacitors for standard operating conditions, and when no significant non-linear loads are present.
- **"PowerLogic™ Can & Box"**: Capacitors for stringent operating conditions, particularly voltage disturbances, or when a few non-linear loads are present. The rated current of capacitors must be increased in order to cope with the circulation of harmonic currents.
- **Capacitors with detuned reactors**: applicable when a significant number of non-linear loads are present.

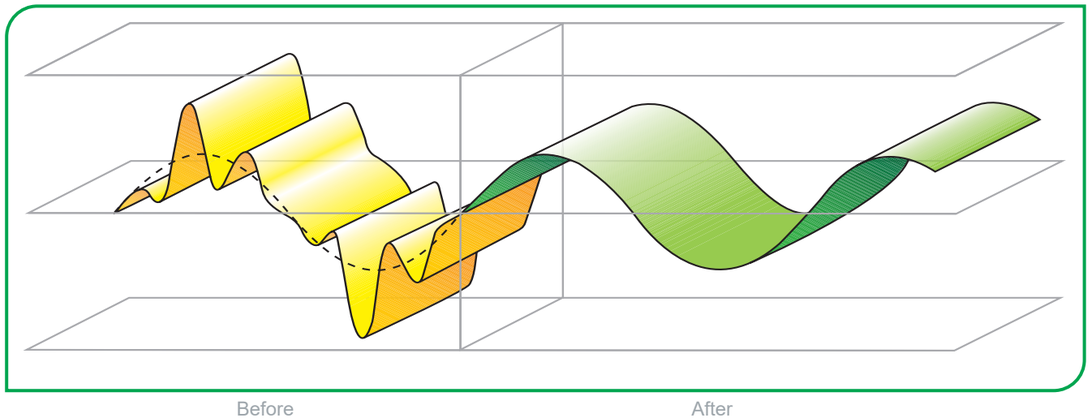

Before After

Low Voltage capacitors with detuned reactors

Capacitors and reactors are configured in a series resonant circuit, tuned so that the series resonant frequency is below the lowest harmonic frequency present in the system

Reactors should be associated with capacitor banks for Power Factor Correction in systems with significant non-linear loads, generating harmonics. Capacitors and reactors are configured in a series resonant circuit, tuned so that the series resonant frequency is below the lowest harmonic frequency present in the system.
For this reason, this configuration is usually called “Detuned Capacitor Bank”, and the reactors are referred to as “Detuned Reactors”.

The use of detuned reactors thus prevents harmonic resonance problems, avoids the risk of overloading the capacitors and helps reduce voltage harmonic distortion in the network.

The tuning frequency can be expressed by the relative impedance of the reactor (in %), or by the tuning order, or directly in Hz.

The most common values of relative impedance are 5.7, 7 and 14 % (14 % is used with high level of 3rd harmonic voltages).

Relative impedance (%)	Tuning order	Tuning frequency @50Hz (Hz)	Tuning frequency @60Hz (Hz)
5.7	4.2	210	250
7	3.8	190	230
14	2.7	135	160

The selection of the tuning frequency of the reactor capacitor depends on several factors:
- Presence of zero-sequence harmonics (3, 9, …)
- Need for reduction of the harmonic distortion level
- Optimization of the capacitor and reactor components
- Frequency of ripple control system if any.

- To prevent disturbances of the remote control installation, the tuning frequency should be selected at a lower value than the ripple control frequency.
- In a detuned filter application, the voltage across the capacitors is higher than the system’s rated voltage. In that case, capacitors should be designed to withstand higher voltages.
- Depending on the selected tuning frequency, part of the harmonic currents is absorbed by the detuned capacitor bank. In that case, capacitors should be designed to withstand higher currents, combining fundamental and harmonic currents.

Effective reactive energy

In the pages relating to detuned capacitor banks, the reactive energy (kvar) given in the tables is the resulting reactive energy provided by the combination of capacitors and reactors.

Capacitor rated voltage

Capacitors have been specially designed to operate in detuned bank configurations. Parameters such as the rated voltage, over-voltage and over-current capabilities have been improved, compared to standard configuration.

Rated voltage and current

According to **IEC 60831-1** standard, the **rated voltage (U_N)** of a capacitor is defined as the continuously admissible operating voltage.

The **rated current (I_N)** of a capacitor is the current flowing through the capacitor when the rated voltage (U_N) is applied at its terminals, supposing a purely sinusoidal voltage and the exact value of reactive power (kvar) generated.
Capacitor units shall be suitable for continuous operation at an r.m.s. current of (1.3 x I_N).

In order to accept system voltage fluctuations, capacitors are designed to sustain over-voltages of limited duration. For compliance to the standard, capacitors are for example requested to sustain over-voltages equal to 1.1 times U_N, 8 h per 24 h.

PowerLogic™ and **EasyLogic™**
capacitors have been designed and tested extensively to operate safely on industrial networks. The design margin allows operation on networks including voltage fluctuations and common disturbances. Capacitors can be selected with their rated voltage corresponding to the network voltage. For different levels of expected disturbances, different technologies are proposed, with larger design margin for capacitors adapted to the most stringent working conditions (EasyLogic™, PowerLogic™, PowerLogic™ Xtreme Heavy Duty).

PowerLogic™ and **EasyLogic™ with Detuned Reactor**
capacitors when used along with Detuned Reactors have to be selected with a rated voltage higher than network service voltage (U_s). In detuned filter applications, the voltage across the capacitor is higher than the network service voltage (U_s).

The recommended rated voltage of capacitors to be used in detuned filter applications with respect to different network service voltage (U_s) and relative impedance is given in the table below.
These values ensure a safe operation in the most stringent operating conditions.
Less conservative values may be adopted, but a case by case analysis is necessary.

Capacitor Rated Voltage U_N (V)		Network Service Voltage U_S (V)				
		50 Hz		60 Hz		
		400	690	400	480	600
Relative Impedance (%)	5.7 7	480	830	480	575	690
	14	480		480		

Capacitor selection guide

Capacitors must be selected depending on the working conditions expected during their lifetime.

Solution	Offer	Description	Recommended use for	Max. condition
EasyLogic™ PFC	Can Construction	Standard capacitor	> Networks with non significant non-linear loads	$N_{LL} \leq 10$ %
			> Standard over-current	1.5 I_N
			> Standard operating temperature	55 °C (class D)
			> Normal switching frequency	5,000/year
			> Standard life expectancy	Up to 100,000h*
	Can Construction	Heavy-duty capacitor	> A few non-linear loads	$N_{LL} \leq 15$ %
			> Significant over-current	1.6 I_N
			> Standard operating temperature	55 °C (class D)
			> Significant switching frequency	6,000/year
			> Long life expectancy	Up to 120,000h*
PoweLogic™ PFC	Can Construction	Heavy-duty capacitor	> A few non-linear loads	$N_{LL} \leq 20$ %
			> Significant over-current	1.8 I_N
			> Standard operating temperature	55 °C (class D)
			> Significant switching frequency	7,500/year
			> Long life expectancy	Up to 130,000h*
	Box Construction	Xtreme heavy duty capacitor	> Significant non-linear loads	$N_{LL} \leq 25$ %
			> Significant over-current	2.1 I_N
			> Higher Operating Temperature	60 °C
			> Higher switching frequency	10000/year
			> Much Longer Life expectancy	Up to 150,000h*

** The maximum life expectancy is given considering standard operating conditions: rated voltage (U_N), rated current (I_N), 35 °C ambient temperature.*
WARNING: the life expectancy will be reduced if capacitors are used in maximum working conditions.

Since the harmonics are caused by non-linear loads, an indicator for the magnitude of harmonics is the ratio of the total power of non-linear loads to the power supply transformer rating.

This ratio is denoted N_{LL}, and is also known as G_h/S_n:
N_{LL} = Total power of non-linear loads (G_h) / Installed transformer rating (S_n).

Example:
- *Power supply transformer rating: S_n = 630 kVA*
- *Total power of non-linear loads: G_h = 150 kVA*
- *N_{LL} = (150/630) x 100 = 24 %*

It is recommended to use Detuned Reactors with Harmonic Rated Capacitors (higher rated voltage than the network service voltage - see the Harmonic Application Tables) for N_{LL} > 20 % and up to 50 %.

Note: there is a high risk in selecting the capacitors based only on N_{LL} as the harmonics in grid may cause current amplification and capacitors along with other devices may fail. Refer to page 61 for further details.

Construction of references Principle

Capacitors

B	L	R	C	H	1 0 4 A	1 2 5 B	4 0
			Construction C = CAN B = BOX	**Range** S= Easylogic SD P= EasyLogic HD H= PowerLogic HD E= PowerLogic Energy SM = EasyLogic SD Single phase HM= PowerLogic HD Single Phase	**Power** at 50 Hz 10.4 kvar at 50 Hz A = 50 Hz	Power at 60 Hz 12.5 kvar at 60 Hz B = 60 Hz "000B" means: labelled only for 50 Hz	**Voltage** 24 - 240 V 40 - 400 V 44 - 440 V 48 - 480 V 52 - 525 V 57 - 575 V 60 - 600 V 69 - 690 V 83 - 830 V

Example:
BLRCS200A240B44 = EasyLogic™ SD, 440 V, 20 kvar at 50 Hz and 24 kvar at 60 Hz

Detuned reactors

L	V	R	0 5	1 2 5	A	6 9 T
		Detuned Reactor	Relative impedance 05 = 5.7 % 07 = 7 % 14 = 14 %	**Power** 12.5 kvar	**Freq.** A = 50 Hz B = 60 Hz	**Voltage** 40 - 400 V 48 - 480 V 60 - 600 V 69 - 690 V

Example:
LVR05125A69T = Detuned Reactor, 690 V, 5.7 %, 12.5 kvar, 50 Hz.

Contents

Presentation
Power Factor Correction guideline 3
Low Voltage capacitors 15

Offer Overview 16

EasyLogic™ PFC 18

PowerLogic™ PFC 26

Can type capacitor mechanical characteristics 34

PowerLogic™ PFC Xtreme Heavy Duty 36

Xtreme Heavy Duty Capacitor mechanical characteristics 41

Detuned reactors 49
Power Factor controllers 55
Contactors 63
Appendix 69

Offer Overview

EasyLogic™ PFC SD

Group of 3 _ SF_ EC Caps copy.eps

EasyLogic™ PFC
Single Phase Capacitor

	EasyLogic™ PFC SD
Construction	Extruded aluminium can
Voltage range	230 V - 525 V
Power range	1-30.3 kvar
Peak inrush current	Up to 200 x I_N
Overvoltage	1.1 x U_N 8 h every 24 h
Overcurrent	1.5 x I_N
Mean life expectancy	Up to 100,000 h
Safety	Self-healing + 3Phase pressure sensitive disconnector (PSD) in 3Phase capacitor and 2Phase pressure sensitive disconnector (PSD) in 1Phase capacitor + non accessible inbuilt discharge device (50 V/1 min)
Dielectric	Metallized Polypropylene film with Zn/Al alloy
Impregnation	Non-PCB, Biodegradable soft resin
Ambient temperature	min. -25 °C max 55 °C/Class D
Protection	IP20(for fast-on and clamptite), indoor IP00 (for stud type)
Mounting	Upright
Terminals	■ Double fast-on + cable ■ CLAMPTITE - terminals with electric shock protection (finger-proof) ■ Stud type terminal (2 terminals for single phase)

EasyLogic™ PFC HD

Group of 2 EC Caps copy.eps

EasyLogic™ PFCThree
Phase Capacitor

	EasyLogic™ PFC HD
Construction	Extruded aluminium can
Voltage range	480 V - 525 V
Power range	7.5-45.2 kvar
Peak inrush current	Up to 220 x I_N
Overvoltage	1.1 x U_N 8 h every 24 h
Overcurrent	1.6 x I_N
Mean life expectancy	Up to 120,000 h
Safety	Self-healing + 3Phase pressure sensitive disconnector (PSD) in 3Phase capacitor and 2Phase pressure sensitive disconnector (PSD) in 1Phase capacitor + non accessible inbuilt discharge device (50 V/1 min)
Dielectric	Metallized Polypropylene film with Zn/Al alloy
Impregnation	Non-PCB, Biodegradable soft resin
Ambient temperature	min. -25 °C max 55 °C/Class D
Protection	IP20(for fast-on and clamptite), indoor IP00 (for stud type)
Mounting	Upright
Terminals	■ Double fast-on + cable ■ CLAMPTITE - terminals with electric shock protection (finger-proof) ■ Stud type terminal

Offer Overview

PowerLogic™ PFC HD

PowerLogic™ PFC
Three Phase Capacitor

	PowerLogic™ PFC HD
Construction	Extruded aluminium can
Voltage range	230 V - 830 V
Power range	1 - 57.1 kvar
Peak inrush current	Up to 250 x I_N
Overvoltage	1.1 x U_N 8 h every 24 h
Overcurrent	1.8 x I_N
Mean life expectancy	Up to 130,000 h
Safety	Self-healing + 3Phase pressure sensitive disconnector (PSD) in 3Phase capacitor and 2Phase pressure sensitive disconnector (PSD) in 1Phase capacitor + non accessable inbuilt discharge device (50 V/1 min)
Dielectric	Metallized Polypropylene film with Zn/Al alloy with special profile metallization and wave cut
Impregnation	Non-PCB, Bio-degradable sticky resin(PU)
Ambient temperature	min. -25 °C max 55 °C/Class D
Protection	IP20(for fast-on and clamptite), indoor IP00 (for Stud type)
Mounting	Upright, horizontal
Terminals	■ Double fast-on + cable CLAMPTITE - Three-phase terminal with electric shock protection (finger-proof) ■ Stud type terminal (> 30 kvar)

PowerLogic™ PFC Xtreme Heavy Duty

	PowerLogic™ PFC Xtreme Heavy Duty
Construction	Steel sheet enclosure
Voltage range	400 V - 525 V
Power range (three-phase)	5- 75 kvar
Peak inrush current	Up to 350 x I_N
Overvoltage	1.1 x U_N 8 h every 24 h
Overcurrent	1.8 x I_N
Mean life expectancy	Up to 150,000 h
Safety	Self-healing + 3 phase pressure-sensitive disconnector (PSD) independent of mechanical assembly + inbuilt discharge device (50 V/1 min) + double enclosure protection (Aluminum can inside steel box)
Dielectric	Metallized Polypropylene film with Zn/Al alloy with special profile metallization and wave cut
Impregnation	Non-PCB, Biodegradable soft resin
Ambient temperature	min. -25 °C max 60 °C
Protection	IP20, Indoor
Mounting	Upright
Terminals	Bushing terminals designed for large cable termination

EasyLogic™ PFC SD Can
Single Phase & Three Phase

An easy choice for savings which is optimized to deliver the performance you need. Suitable for standard operating conditions to deliver safe and reliable performance.

EasyLogic™ three phase

EasyLogic™ single phase

Operating conditions
- For networks with insignificant non-linear loads: (N_{LL} ≤ 10 %).
- Standard voltage disturbances.
- Standard operating temperature up to 55 °C.
- Normal switching frequency up to 5000 /year.
- Maximum current (including harmonics) is 1.5 x I_N.

Technology
Constructed internally with single-phase capacitor elements assembled in an optimized design. Each capacitor element is manufactured with metallized polypropylene film.

The active capacitor elements are covered in a specially formulated biodegradable, non-PCB, polyurethane soft resin. This ensures thermal stability and heat removal from inside the capacitor.

The unique finger-proof CLAMPTITE termination is fully integrated with discharge resistors. It allows suitable access to tightening and cable termination without any loose connections.

For Lower ratings, double fast-on terminals with integrated cables are provided for easy and faster connection, reducing the risk of terminal overheating and failure.

Safety
- Self-healing.
- Pressure-sensitive disconnecter on all the phase.
- Discharge resistors fitted - non removable.
- Finger-proof CLAMPTITE terminals to reduce risk of accidental contact and to ensure firm termination (10 to 30.3 kvar in three phase and 8.3 - 15.1 kvar in single phase).

Easy installation & maintenance
- Optimized design for safety, reliability with required performance , Optimized size to ensure easy installation and upto 20% space saving in cubicles.
- New CLAMPTITE terminals for easy of connection that maintains the terminal tightness with IP20 protection.
- Non accessaile in-built discharge resistors to ensure safety.
- Single point/Stud for mounting and earthing.
- Simultaneous and safe disconnection of all the phases at end of life in EasyLogic™.
- Stacked design and resin filled technology for better heat dissipation/cooling.

Benefits
- Easy installation
- Easy for reliablity and safe usage.
- Easy for quality assurance.
- Easy choice for building your solutions with other Schneider Electric components.
- Easy choice for savings.

EasyLogic™ PFC SD Can
Single Phase & Three Phase

EasyCan03copy.eps

EasyCanStud_SF_04copy.eps

Technical specifications

General characteristics		
Standards		IEC 60831-1/2
Voltage range		230V to 525V in Three Phase & 220-440V in Single Phase
Frequency		50 / 60 Hz
Power range		1-30.3 kvar
Losses (dielectric)		< 0.2 W / kvar
Losses (total)		< 0.5 W / kvar
Capacitance tolerance		-5 %, +10 %
Voltage test	Between terminals	2.15 x U_N (AC), 10 s
	Between terminal & container	3 kV (AC), 10 s or 3.66 kV (AC), 2 s
	Impulse voltage	8 kV
Discharge resistor		Fitted, standard discharge time 60 s
Working conditions		
Ambient temperature		-25 / 55 °C (Class D)
Humidity		95 %
Altitude		2,000 m above sea level
Overvoltage		1.1 x U_N 8 h in every 24 h
Overcurrent		Up to 1.5 x I_N
Peak inrush current		200 x I_N
Switching operations (max.)		Up to 5,000 switching operations per year
Mean Life expectancy		Up to 100,000 hrs
Harmonic content withstand		N_{LL} ≤ 10 %
Installation characteristics		
Mounting position		Indoor, upright
Fastening		Threaded M12 stud at the bottom
Earthing		
Terminals		■ CLAMPTITE - terminals with electric shock protection (finger-proof) & double fast-on terminal in lower kvar ■ Stud type terminal: □ Three way stud type terminals for the ratings above 30.3 kvar in three phase capacitors (2 terminals for single phase) □ Two way stud terminals for ratings above 15.1 kvar in single phase
Safety features		
Safety		Self-healing + Pressure-sensitive disconnector + Discharge device
Protection		IP20 (for fast-on and clamptite)
Construction		
Casing		Extruded Aluminium Can
Dielectric		Metallized polypropylene film with Zn/Al alloy
Impregnation		Biodegradable, Non-PCB, poly urethane soft resin

⚠ WARNING

HAZARD OF ELECTRICAL SHOCK

Wait 5 minutes after isolating supply before handling

Failure to follow these instructions can result in injury or equipment damage

EasyLogic™ PFC SD Can
Single Phase

Rated Voltage 240 to 440 V

50 Hz							µF (X1)	Case Code	Reference Number
Q_N (kvar)									
230 V	240 V	250 V	280 V	300 V	400 V	440 V			
0.25	**0.27**	0.29	0.37	0.42	**0.75**	-	**15.9**	ECM	**BLRCSM008A010B40**
0.50	**0.54**	0.59	0.74	0.8	**1.5**	-	**29.9**	GCM	**BLRCSM015A018B40**
0.83	**0.90**	1.0	1.2	1.4	**2.5**	-	**49.8**	GCM	**BLRCSM025A030B40**
1.0	**1.1**	1.2	1.5	1.7	**3.0**	-	**59.7**	GCM	**BLRCSM030A036B40**
1.1	**1.2**	1.4	1.7	2.0	**3.5**	4.2	**69.1**	GCM	**BLRCSM042A050B44**
1.4	**1.5**	**1.6**	2.0	2.3	**4.2**	-	**83.6**	KCM	**BLRCSM042A050B40**
1.5	**1.6**	**1.8**	2.2	2.5	**4.5**	-	**89.6**	KCM	**BLRCSM045A054B40**
2.5	**2.7**	**3.0**	3.7	4.3	**7.6**	-	**151.3**	LCM	**BLRCSM076A091B40**
2.8	**3.0**	3.3	4.1	4.7	**8.3**	-	**165.2**	RCM	**BLRCSM083A100B40**
5.0	**5.4**	**5.9**	7.4	8.5	**15.1**	-	**300.6**	RCM	**BLRCSM151A181B40**
7.1	**7.7**	**8.4**	10.5	12.1	**21.5**	-	**427.9**	TCM	**BLRCSM215A258B40**
7.4	**8.1**	**8.8**	11.0	12.7	**22.5**	-	**447.9**	TCM	**BLRCSM225A270B40**
7.7	**8.4**	9.1	11.4	13.1	**23.3**	-	**463.8**	TCM	**BLRCSM233A280B40**
8.5	**9.3**	**10.1**	12.6	14.5	**25.8**	-	**513.5**	VCM	**BLRCSM258A310B40**
9.2	**10.1**	**10.9**	13.7	15.7	**28.0**	-	**557.3**	VCM	**BLRCSM280A336B40**
10.0	**10.9**	**11.8**	14.8	17.0	**30.2**	-	**601.1**	VCM	**BLRCSM302A362B40**
10.6	**11.6**	12.6	15.8	18.1	**-**	-	**640.5**	TCM	**BLRCSM181A217B30**
11.5	**12.6**	**13.6**	17.1	19.6	**-**	-	**693.6**	TCM	**BLRCSM196A235B30**

Rated Voltage 240 to 440 V

60 Hz							µF (X1)	Case Code	Reference Number
Q_N (kvar)									
230 V	240 V	250 V	280 V	300 V	400 V	440 V			
230V	**240V**	250V	280V	300V	**400V**	440V			
0.30	**0.32**	0.35	0.44	0.51	**0.90**	-	**15.9**	ECM	**BLRCSM008A010B40**
0.60	**0.65**	0.70	0.88	1.0	**1.8**	-	**29.9**	GCM	**BLRCSM015A018B40**
1.0	**1.1**	1.2	1.5	1.7	**3.0**	-	**49.8**	GCM	**BLRCSM025A030B40**
1.2	**1.3**	1.4	1.8	2.0	**3.6**	-	**59.7**	GCM	**BLRCSM030A036B40**
1.4	**1.5**	**1.6**	2.0	2.3	**4.2**	5.0	**69.1**	GCM	**BLRCSM042A050B44**
1.7	**1.8**	**2.0**	2.5	2.8	**5.0**	-	**83.6**	KCM	**BLRCSM042A050B40**
1.8	**1.9**	**2.1**	2.6	3.0	**5.4**	-	**89.6**	KCM	**BLRCSM045A054B40**
3.0	**3.3**	3.6	4.5	5.1	**9.1**	-	**151.3**	LCM	**BLRCSM076A091B40**
3.3	**3.6**	**3.9**	4.9	5.6	**10.0**	-	**165.2**	RCM	**BLRCSM083A100B40**
6.0	**6.5**	**7.1**	8.9	10.2	**18.1**	-	**300.6**	RCM	**BLRCSM151A181B40**
8.5	**9.3**	**10.1**	12.6	14.5	**25.8**	-	**427.9**	TCM	**BLRCSM215A258B40**
8.9	**9.7**	10.5	13.2	15.2	**27.0**	-	**447.9**	TCM	**BLRCSM225A270B40**
9.2	**10.1**	**10.9**	13.7	15.7	**27.9**	-	**463.8**	TCM	**BLRCSM233A280B40**
10.2	**11.1**	**12.1**	15.2	17.4	**30.9**	-	**513.5**	VCM	**BLRCSM258A310B40**
11.1	**12.1**	**13.1**	16.4	18.9	**33.6**	-	**557.3**	VCM	**BLRCSM280A336B40**
12.0	**13.0**	14.2	17.8	20.4	**36.2**	-	**601.1**	VCM	**BLRCSM302A362B40**
12.8	**13.9**	**15.1**	18.9	21.7	**-**	-	**640.5**	TCM	**BLRCSM181A217B30**
13.8	**15.1**	16.4	20.5	23.6	**-**	-	**693.6**	TCM	**BLRCSM196A235B30**

EasyLogic™ PFC SD Can
Three Phase

Rated Voltage 240/260 V

50 Hz				60 Hz				µF (X3)	Case Code	Reference Number
Q_N (kvar)			I_N (A)	Q_N (kvar)			I_N (A)			
230 V	240 V	260 V	at 260 V	230 V	240 V	260 V	at 260 V			
2.5	**2.7**	3.2	7.1	3.0	**3.3**	3.8	8.5	**46.0**	HC	**BLRCS027A033B24**
5.0	**5.4**	6.4	14.2	6.0	**6.5**	7.7	17.0	**92.1**	MC	**BLRCS054A065B24**
5.8	**6.3**	7.4	16.4	6.9	**7.5**	8.9	19.7	**116.0**	NC	**BLRCS063A075B24**
7.6	**8.3**	9.6	21.3	9.1	**10.0**	11.5	25.5	**138.1**	NC	**BLRCS083A100B24**
10.0	**10.9**	12.8	28.4	12.0	**13.0**	15.3	34.1	**152.8**	SC	**BLRCS109A130B24**

Rated Voltage 380/400/415 V

50 Hz				60 Hz				µF (X3)	Case Code	Reference Number
Q_N (kvar)			I_N (A)	Q_N (kvar)			I_N (A)			
380 V	400 V	415 V	at 400 V	380 V	400 V	415 V	at 400 V			
0.9	**1.0**	1.1	1.4	1.1	**1.2**	1.3	1.7	**6.6**	EC	**BLRCS010A012B40**
1.5	**1.7**	1.8	2.5	1.8	**2.0**	2.2	2.9	**11.3**	DC	**BLRCS017A020B40**
1.8	**2.0**	2.2	2.9	2.2	**2.4**	2.6	3.5	**13.3**	DC	**BLRCS020A024B40**
2.3	**2.5**	2.7	3.6	2.7	**3.0**	3.2	4.3	**16.6**	DC	**BLRCS025A030B40**
2.7	**3.0**	3.2	4.3	3.2	**3.6**	3.9	5.2	**19.9**	DC	**BLRCS030A036B40**
3.8	**4.2**	4.5	6.1	4.5	**5.0**	5.4	7.3	**27.8**	HC	**BLRCS042A050B40**
4.5	**5.0**	5.4	7.2	5.4	**6.0**	6.5	8.7	**33.1**	HC	**BLRCS050A060B40**
5.7	**6.3**	6.8	9.1	6.8	**7.5**	8.1	10.9	**41.8**	HC	**BLRCS063A075B40**
6.8	**7.5**	8.1	10.8	8.1	**9.0**	9.7	13.0	**49.7**	HC	**BLRCS075A090B40**
7.5	**8.3**	8.9	12.0	9.0	**10.0**	10.7	14.4	**55.0**	LC	**BLRCS083A100B40**
9.4	**10.4**	11.2	15.0	11.3	**12.5**	13.4	18.0	**68.9**	MC	**BLRCS104A125B40**
11.3	**12.5**	13.5	18.0	13.5	**15.0**	16.1	21.7	**82.9**	NC	**BLRCS125A150B40**
13.5	**15.0**	16.1	21.7	16.2	**18.0**	19.4	26.0	**99.4**	NC	**BLRCS150A180B40**
15.1	**16.7**	18.0	24.1	18.1	**20.0**	21.6	28.9	**110.7**	SC	**BLRCS167A200B40**
18.1	**20.0**	21.5	28.9	21.7	**24.0**	25.8	34.6	**132.6**	SC	**BLRCS200A240B40**
18.8	**20.8**	22.4	30.0	22.5	**25.0**	26.9	36.0	**137.9**	SC	**BLRCS208A250B40**
20.0	**22.2**	23.9	32.0	24.0	**26.6**	28.7	38.4	**147.0**	SC	**BLRCS222A266B40**
22.6	**25.0**	26.9	36.1	27.1	**30.0**	32.3	43.3	**165.7**	SC	**BLRCS250A300B40**
25.0	**27.7**	29.8	40.0	30.0	**33.2**	35.8	48.0	**184.0**	VC	**BLRCS277A332B40**

EasyLogic™ PFC SD Can
Three Phase

Rated Voltage 440 V										
50 Hz				60 Hz				µF (X3)	Case Code	Reference Number
Q_N (kvar)			I_N (A)	Q_N (kvar)			I_N (A)			
400 V	415 V	440 V	at 440 V	400 V	415 V	440 V	at 440 V			
2.5	2.7	**3.0**	3.9	3.0	3.2	**3.6**	4.7	**16.4**	DC	**BLRCS030A036B44**
4.1	4.4	**5.0**	6.6	5.0	5.3	**6.0**	7.9	**27.4**	HC	**BLRCS050A060B44**
6.2	6.7	**7.5**	9.8	7.4	8.0	**9.0**	11.8	**41.1**	HC	**BLRCS075A090B44**
8.3	8.9	**10.0**	13.1	9.9	10.7	**12.0**	15.7	**54.8**	LC	**BLRCS100A120B44**
10.3	11.1	**12.5**	16.4	12.4	13.3	**15.0**	19.7	**68.5**	NC	**BLRCS125A150B44**
11.8	12.7	**14.3**	18.8	14.2	15.3	**17.2**	22.5	**78.3**	NC	**BLRCS143A172B44**
12.4	13.3	**15.0**	19.7	14.9	16.0	**18.0**	23.6	**82.2**	NC	**BLRCS150A180B44**
14.0	15.0	**16.9**	22.2	16.8	18.0	**20.3**	26.6	**92.6**	SC	**BLRCS169A203B44**
15.0	16.2	**18.2**	23.9	18.0	19.4	**21.8**	28.7	**99.7**	SC	**BLRCS182A218B44**
16.5	17.8	**20.0**	26.2	19.8	21.4	**24.0**	31.5	**109.6**	SC	**BLRCS200A240B44**
20.7	22.2	**25.0**	32.8	24.8	26.7	**30.0**	39.4	**137.0**	SC	**BLRCS250A300B44**
23.6	25.4	**28.5**	37.4	28.3	30.4	**34.2**	44.9	**156.1**	SC	**BLRCS285A342B44**
25.0	27.0	**30.3**	39.8	30.0	32.3	**36.4**	47.7	**166.0**	SC	**BLRCS303A364B44**

Rated Voltage 480 V										
50 Hz				60 Hz				µF (X3)	Case Code	Reference Number
Q_N (kvar)			I_N (A)	Q_N (kvar)			I_N (A)			
400 V	415 V	480 V	at 480 V	400 V	440 V	480 V	at 480 V			
2.9	3.1	**4.2**	5.1	3.5	4.2	**5.0**	6.1	**19.3**	HC	**BLRCS042A050B48**
4.7	5.0	**6.7**	8.1	5.6	6.8	**8.0**	9.7	**30.8**	HC	**BLRCS067A080B48**
6.1	6.6	**8.8**	10.6	7.3	8.9	**10.6**	12.7	**40.5**	LC	**BLRCS088A106B48**
7.2	7.8	**10.4**	12.5	8.7	10.5	**12.5**	15.0	**47.9**	MC	**BLRCS104A125B48**
8.7	9.3	**12.5**	15.0	10.4	12.6	**15.0**	18.0	**57.5**	NC	**BLRCS125A150B48**
10.8	11.6	**15.5**	18.6	12.9	15.6	**18.6**	22.4	**71.4**	NC	**BLRCS155A186B48**
11.8	12.7	**17.0**	20.4	14.2	17.1	**20.4**	24.5	**78.3**	NC	**BLRCS170A204B48**
12.9	13.9	**18.6**	22.4	15.5	18.8	**22.3**	26.9	**85.6**	SC	**BLRCS186A223B48**
14.4	15.5	**20.8**	25.0	17.3	21.0	**25.0**	30.0	**95.7**	SC	**BLRCS208A250B48**
17.9	19.3	**25.8**	31.0	21.5	26.0	**31.0**	37.2	**118.8**	SC	**BLRCS258A310B48**
20.0	21.5	**28.8**	34.6	24.0	29.0	**34.6**	41.6	**132.6**	VC	**BLRCS288A346B48**
21.9	23.5	**31.5**	37.9	26.3	31.8	**37.8**	45.5	**145.0**	VC	**BLRCS315A378B48**
23.5	25.3	**33.9**	40.8	28.3	34.2	**40.7**	48.9	**156.1**	XC	**BLRCS339A407B48**

Rated Voltage 525 V										
50 Hz				60 Hz				µF (X3)	Case Code	Reference Number
Q_N (kvar)			I_N (A)	Q_N (kvar)			I_N (A)			
415 V	480 V	525 V	at 525 V	400 V	480 V	525 V	at 525 V			
3.1	4.2	**5.0**	5.5	3.5	5.0	**6.0**	6.6	**19.2**	HC	**BLRCS050A060B52**
6.6	8.9	**10.6**	11.7	7.4	10.6	**12.7**	14.0	**40.8**	MC	**BLRCS106A127B52**
7.8	10.4	**12.5**	13.7	8.7	12.5	**15.0**	16.5	**48.1**	NC	**BLRCS125A150B52**
9.6	12.9	**15.4**	16.9	10.7	15.4	**18.5**	20.3	**59.3**	NC	**BLRCS154A185B52**
12.5	16.7	**20.0**	22.0	13.9	20.1	**24.0**	26.4	**77.0**	SC	**BLRCS200A240B52**
15.6	20.9	**25.0**	27.5	17.4	25.1	**30.0**	33.0	**96.2**	SC	**BLRCS250A300B52**

EasyLogic™ PFC SD Can
harmonic applications
Three Phase Applications

EasyLogic™ SD Can capacitors are designed to work in slightly polluted networks with detuned reactors. 480 and 525V range of EasyLogic™ SD Can capacitor is designed to work with detuned reactors in 400V.

Detuned reactor *EasyLogic™*

Operating conditions
- For slightly polluted networks.
- Slight voltage disturbances.
- Need of switching frequency up to 5000 /year.

Rated voltage
In a detuned filter application, the voltage across the capacitors is higher than the network service voltage (U_S). Then, capacitors must be designed to withstand higher voltages.

Depending on the selected tuning frequency, part of the harmonic currents are absorbed by the detuned capacitor bank. Then, capacitors must be designed to withstand higher currents, combining fundamental and harmonic currents.

The rated voltage of EasyLogic™ capacitors is given in the table below, for different values of network service voltage and relative impedance.

Capacitor Rated Voltage U_N (V)		Network Service Voltage U_S (V)	
		50 Hz	60 Hz
		400	400
Relative Impedance (%)	5.7 7	**480**	**480**
	14	**480**	**480**

In the following pages, the effective power (kvar) given in the tables is the reactive power provided by the combination of capacitors and reactors.

EasyLogic™ PFC SD Can + Detuned Reactor + Contactor + MCCB

PE90154_L28_.eps

+

EasyCan03copy.eps

+

LC1D25BD.JPG

+

PB106447-02.jpg

Network 400 V, 50 Hz Capacitor Voltage 480 V 5.7 % / 7 % Detuned Filter						
Effective Power (kvar)	Q_N at 480 V	Capacitor Ref.	5.7% fr = 215Hz	7% fr = 190Hz	Switching: Contactor Ref.	Protection: Easypact CVS
			D R Ref	D R Ref.		(I_{CU}=36kA)Ref.
6.5	8.8	BLRCS088A106B48 × 1	LVR05065A40T x 1	LVR07065A40T x 1	LC1D12 × 1	LV510330 × 1
12.5	17	BLRCS170A204B48 × 1	LVR05125A40T x 1	LVR07125A40T x 1	LC1D18× 1	LV510331 × 1
25	33.9	BLRCS339A407B48 × 1	LVR05250A40T x 1	LVR07250A40T x 1	LC1D38 × 1	LV510334 × 1
50	67.9	BLRCS339A407B48 × 2	LVR05500A40T x 1	LVR07500A40T x 1	LC1D95 × 1	LV510337 × 1
100	136	BLRCS339A407B48 × 4	LVR05X00A40T x 1	LVR07X00A40T x 1	LC1F185 × 1	LV525332 × 1

Network 400 V, 50 Hz Capacitor Voltage 480 V 14 % Detuned Filter					
Effective Power (kvar)	Q_N at 480 V	Capacitor Ref.	14% fr = 135Hz	Switching: Contactor Ref.	Protection: Easypact CVS
			D R Ref		(I_{CU}=36kA)Ref.
6.5	8.8	BLRCS088A106B48 × 1	LVR14065A40T x 1	LC1D12 × 1	LV510330 × 1
12.5	15.5	BLRCS155A186B48 × 1	LVR14125A40T x 1	LC1D18× 1	LV510331 × 1
25	31.5	BLRCS315A378B48 × 1	LVR14250A40T x 1	LC1D38 × 1	LV510334 × 1
50	63	BLRCS315A378B48 × 2	LVR14500A40T x 1	LC1D95 × 1	LV510337 × 1
100	126	BLRCS315A378B48 × 4	LVR14X00A40T x 1	LC1F185 × 1	LV525332 × 1

Network 400 V, 60 Hz Capacitor Voltage 480 V 5.7 % / 7 % Detuned Filter						
Effective Power (kvar)	Q_N at 480 V	Capacitor Ref.	5.7% fr = 250Hz	7% fr = 230Hz	Switching: Contactor Ref.	Protection: Easypact CVS
			D R Ref	D R Ref		(I_{CU}=36kA)Ref.
12.5	17.3	BLRCS144A173B48 × 1	LVR05125B40T × 1	LVR07125B40T × 1	LC1D18× 1	LV510331 × 1
25	34.6	BLRCS288A346B48 × 1	LVR05250B40T × 1	LVR07250B40T × 1	LC1D38 × 1	LV510334 × 1
50	69.2	BLRCS288A346B48 × 2	LVR05500B40T × 1	LVR07500B40T × 1	LC1D95 × 1	LV510337 × 1
100	138.4	BLRCS288A346B48 × 4	LVR05X00B40T × 1	LVR07X00B40T × 1	LC1F185 × 1	LV525332 × 1

Network 400 V, 60 Hz Capacitor Voltage 480 V 14 % Detuned Filter					
Effective Power (kvar)	Q_N at 480 V	Capacitor Ref.	14% fr = 160Hz	Switching: Contactor Ref.	Protection: Easypact CVS
			D R Ref.		(I_{CU}=36kA)Ref.
12.5	16.3	BLRCS136A163B48 × 1	LVR14125B40T × 1	LC1D18× 1	LV510331 × 1
25	31	BLRCS258A310B48 × 1	LVR14250B40T × 1	LC1D38 × 1	LV510334 × 1
50	62	BLRCS258A310B48 × 2	LVR14500B40T × 1	LC1D95 × 1	LV510337 × 1
100	124	BLRCS258A310B48 × 4	LVR14X00B40T × 1	LC1F185 × 1	LV525332 × 1

EasyLogic™ PFC HD Can
Three Phase

An Easy choice for savings which is optimized to deliver the performance you need. Suitable for operating conditions with a few non-linear loads to deliver safe and reliable performance.
.

EasyLogic™ three phase

EasyLogic™ single phase

Operating conditions
- For networks with insignificant non-linear loads: (N_{LL} ≤ 15 %).
- Standard voltage disturbances.
- Standard operating temperature up to 55 °C.
- Normal switching frequency up to 6500 /year.
- Maximum current (including harmonics) is 1.6 x I_N.

Technology
Constructed internally with single-phase capacitor elements assembled in an optimized design. Each capacitor element is manufactured with metallized polypropylene film.

The active capacitor elements are covered in a specially formulated biodegradable, non-PCB, polyurethane soft resin. This ensures thermal stability and heat removal from inside the capacitor.

The unique finger proof CLAMPTITE termination is fully integrated with discharge resistors. It allows suitable access to tightening and cable termination without any loose connections.

For Lower ratings, double fast-on terminals with integrated cables are provided for easy and faster connection, reducing the risk of terminal overheating and failure.

Safety
- Self-healing.
- Pressure-sensitive disconnecter on all the phase.
- Discharge resistors fitted - non removable.
- Finger-proof CLAMPTITE terminals to reduce risk of accidental contact and to ensure firm termination (10-25kvar in three phase).
- Stud terminals above than 25kvar for easy terminal connection.

Easy installation & maintenance
- Optimized design for safety, reliability with required performance , Optimized size to ensure easy installation and upto 20% space saving in cubicles.
- New CLAMPTITE terminals for easy of connection that maintains the terminal tightness with IP20 protection.
- Non accessaile in-built discharge resistors to ensure safety.
- Single point/Stud for mounting and earthing.
- Simultaneous and safe disconnection of all the phases at end of life in EasyLogic™.
- Stacked design and resin filled technology for better heat dissipation/cooling.

Benefits
- Easy installation
- Easy for reliablity and safe usage.
- Easy for quality assurance.
- Easy choice for building your solutions with other Schneider Electric components.
- Easy choice for savings.

EasyLogic™ PFC HD Can
Three Phase

EasyCan03copy.eps

EasyCanStud_SF_04copy.eps

Technical specifications

General characteristics		
Standards		IEC 60831-1/2
Voltage range		480V to 525V in Three Phase
Frequency		50 / 60 Hz
Power range		7.5 - 45.2 kvar
Losses (dielectric)		< 0.2 W / kvar
Losses (total)		< 0.5 W / kvar
Capacitance tolerance		-5 %, +10 %
Voltage test	Between terminals	2.15 x U_N (AC), 10 s
	Between terminal & container	3 kV (AC), 10 s or 3.66 kV (AC), 2 s
	Impulse voltage	8 kV
Discharge resistor		Fitted, standard discharge time 60 s
Working conditions		
Ambient temperature		-25 / 55 °C (Class D)
Humidity		95 %
Altitude		2,000 m above sea level
Overvoltage		1.1 x U_N 8 h in every 24 h
Overcurrent		Up to 1.6 x I_N
Peak inrush current		200 x I_N
Switching operations (max.)		Up to 6,500 switching operations per year
Mean Life expectancy		Up to 120,000 hrs
Harmonic content withstand		N_{LL} ≤ 15 %
Installation characteristics		
Mounting position		Indoor, upright
Fastening		Threaded M12 stud at the bottom
Earthing		
Terminals		■ CLAMPTITE - terminals with electric shock protection (finger-proof) & double fast-on terminal in lower kvar ■ Stud type terminal: □ Three way stud type terminals for the ratings above 25 kvar in three phase capacitors.
Safety features		
Safety		Self-healing + Pressure-sensitive disconnector + Discharge device
Protection		IP20 (for fast-on and clamptite)
Construction		
Casing		Extruded Aluminium Can
Dielectric		Metallized polypropylene film with Zn/Al alloy
Impregnation		Biodegradable, Non-PCB, poly urethane soft resin

⚠ WARNING

HAZARD OF ELECTRICAL SHOCK

Wait 5 minutes after isolating supply before handling

Failure to follow these instructions can result in injury or equipment damage

EasyLogic™ PFC HD Can
Three Phase

Rated Voltage 480 V										
50 Hz				60 Hz				µF (X3)	Case Code	Reference Number
Q_N (kvar)			I_N (A)	Q_N (kvar)			I_N (A)			
400 V	415 V	480 V	at 480 V	400 V	415 V	480 V	at 480 V			
5.2	5.6	**7.5**	9	6.3	6.7	**9**	10.8	**34.6**	LC	**BLRCP075A090B48**
8.7	9.3	**12.5**	15	10.4	11.2	**15**	18	**57.6**	NC	**BLRCP125A150B48**
9.4	10.2	**13.6**	16.4	11.3	12.2	**16.3**	19.6	**62.7**	NC	**BLRCP136A163B48**
10.8	11.6	**15.5**	18.6	12.9	13.9	**18.6**	22.4	**71.4**	SC	**BLRCP155A186B48**
11.8	12.7	**17**	20.4	14.2	15.2	**20.4**	24.5	**78.3**	SC	**BLRCP170A204B48**
14.4	15.5	**20.8**	25	17.4	18.7	**25**	30.1	**95.8**	SC	**BLRCP208A250B48**
17.4	18.7	**25**	30.1	20.8	22.4	**30**	36.1	**115.2**	XC	**BLRCP250A300B48**
20	21.5	**28.8**	34.6	24	25.9	**34.6**	41.6	**132.7**	XC	**BLRCP288A346B48**
21.9	23.5	**31.5**	37.9	26.3	28.3	**37.8**	45.5	**145.1**	XC	**BLRCP315A378B48**
23.1	24.9	**33.3**	40.1	27.8	29.9	**40**	48.1	**153.4**	XC	**BLRCP333A400B48**

Rated Voltage 525 V										
50 Hz				60 Hz				µF (X3)	Case Code	Reference Number
Q_N (kvar)			I_N (A)	Q_N (kvar)			I_N (A)			
415 V	480 V	525 V	at 525 V	415 V	480 V	525 V	at 525 V			
5.2	**6.9**	8.3	9.1	6.2	**8.4**	10	11	**32**	LC	**BLRCP083A100B52**
6.6	**8.9**	10.6	11.7	7.9	**10.6**	12.7	14	**40.8**	NC	**BLRCP106A127B52**
7.8	**10.4**	12.5	13.7	9.4	**12.5**	15	16.5	**48.1**	NC	**BLRCP125A150B52**
10.7	**14.4**	17.2	18.9	12.9	**17.3**	20.6	22.7	**66.2**	SC	**BLRCP172A206B52**
13	**17.4**	20.8	22.9	15.6	**20.9**	25	27.5	**80.1**	SC	**BLRCP208A250B52**
15.6	**20.9**	25	27.5	18.7	**25.1**	30	33	**96.3**	SC	**BLRCP250A300B52**
19.3	**25.8**	30.9	34	23.2	**31**	37.1	40.8	**119**	XC	**BLRCP309A371B52**
21.5	**28.8**	34.4	37.8	25.8	**34.5**	41.3	45.4	**132.5**	XC	**BLRCP344A413B52**
23.6	**31.5**	37.7	41.5	28.3	**37.8**	45.2	49.8	**145.2**	XC	**BLRCP377A452B52**

EasyLogic™ PFC HD Can
harmonic applications
Three Phase Applications

An Easy choice for savings which is optimized to deliver the performance you need. Suitable for operating conditions with a few non-linear loads to deliver safe and reliable performance.

Detuned reactor + *EasyLogic™*

Operating conditions
- For slightly polluted networks.
- Slight voltage disturbances.
- Need of switching frequency up to 5000 /year.

Rated voltage
In a detuned filter application, the voltage across the capacitors is higher than the network service voltage (U_S). Then, capacitors must be designed to withstand higher voltages.

Depending on the selected tuning frequency, part of the harmonic currents are absorbed by the detuned capacitor bank. Then, capacitors must be designed to withstand higher currents, combining fundamental and harmonic currents.

The rated voltage of EasyLogic™ capacitors is given in the table below, for different values of network service voltage and relative impedance.

Capacitor Rated Voltage U_N (V)		Network Service Voltage U_S (V)	
		50 Hz	60 Hz
		400	400
Relative Impedance (%)	5.7 7	480	480
	14	480	480

In the following pages, the effective power (kvar) given in the tables is the reactive power provided by the combination of capacitors and reactors.

EasyLogic™ PFC HD Can + Detuned Reactor + Contactor + MCCB

PE90154_L28_r.eps

+

EasyCan03copy.eps

+

LC1D25BD.JPG

+

PB106447-02.jpg

Network 400 V, 50 Hz Capacitor Voltage 480 V 5.7 % / 7 % Detuned Filter

Effective Power (kvar)	Q_N at 480 V	Capacitor Ref.	5.7% fr = 215Hz	7% fr = 190Hz	Switching: Contactor Ref.	Protection: Easypact CVS
			D R Ref	D R Ref.		(I_{CU}=36kA)Ref.
6.5	8.8	BLRCP088A106B48 × 1	LVR05065A40T x 1	LVR07065A40T x 1	LC1D12 × 1	LV510330 × 1
12.5	17	BLRCP170A204B48 × 1	LVR05125A40T x 1	LVR07125A40T x 1	LC1D18× 1	LV510331 × 1
25	33.3	BLRCP333A400B48 × 1	LVR05250A40T x 1	LVR07250A40T x 1	LC1D38 × 1	LV510334 × 1
50	66.6	BLRCP333A400B48 × 2	LVR05500A40T x 1	LVR07500A40T x 1	LC1D95 × 1	LV510337 × 1
100	133.2	BLRCP333A400B48 × 4	LVR05X00A40T x 1	LVR07X00A40T x 1	LC1F185 × 1	LV525332 × 1

Network 400 V, 50 Hz Capacitor Voltage 480 V 14 % Detuned Filter

Effective Power (kvar)	Q_N at 480 V	Capacitor Ref.	14% fr = 135Hz	Switching: Contactor Ref.	Protection: Easypact CVS
			D R Ref		(I_{CU}=36kA)Ref.
6.5	8.8	BLRCP088A106B48 × 1	LVR14065A40T x 1	LC1D12 × 1	LV510330 × 1
12.5	15.5	BLRCP155A186B48 × 1	LVR14125A40T x 1	LC1D18× 1	LV510331 × 1
25	31.5	BLRCP315A378B48 × 1	LVR14250A40T x 1	LC1D38 × 1	LV510334 × 1
50	63	BLRCP315A378B48 × 2	LVR14500A40T x 1	LC1D95 × 1	LV510337 × 1
100	126	BLRCP315A378B48 × 4	LVR14X00A40T x 1	LC1F185 × 1	LV525332 × 1

Network 400 V, 50 Hz Capacitor Voltage 525 V 5.7 % / 7 % Detuned Filter

Effective Power (kvar)	Q_N at 525V	Capacitor Ref.	5.7% fr = 215Hz	7% fr = 190Hz	Switching: Contactor Ref.	Protection: Easypact CVS
			D R Ref	D R Ref.		(I_{CU}=36kA)Ref.
6.5	10.6	BLRCP106A127B52 × 1	LVR05065A40T x 1	LVR07065A40T x 1	LC1D12 × 1	LV510330 × 1
12.5	20.8	BLRCP208A250B52 × 1	LVR05125A40T x 1	LVR07125A40T x 1	LC1D18× 1	LV510331 × 1
25	41.6	BLRCP208A250B52 × 2	LVR05250A40T x 1	LVR07250A40T x 1	LC1D38 × 1	LV510334 × 1
50	83.2	BLRCP208A250B52 x 4	LVR05500A40T x 1	LVR07500A40T x 1	LC1D95 × 1	LV510337 × 1
100	166.4	BLRCP208A250B52 x 8	LVR05X00A40T x 1	LVR07X00A40T x 1	LC1F185 × 1	LV525332 × 1

Network 400 V, 50 Hz Capacitor Voltage 525 V 14 % Detuned Filter

Effective Power (kvar)	Q_N at 525 V	Capacitor Ref.	14% fr = 135Hz	Switching: Contactor Ref.	Protection: Easypact CVS
			D R Ref		(I_{CU}=36kA)Ref.
6.5	10.6	BLRCP106A127B52 × 1	LVR14065A40T x 1	LC1D12 × 1	LV510330 × 1
12.5	20.8	BLRCP208A250B52 x 1	LVR14125A40T x 1	LC1D18× 1	LV510331 × 1
25	37.7	BLRCP377A452B52 x 1	LVR14250A40T x 1	LC1D38 × 1	LV510334 × 1
50	75.4	BLRCP377A452B52 × 2	LVR14500A40T x 1	LC1D95 × 1	LV510337 × 1
100	150.8	BLRCP377A452B52 × 4	LVR14X00A40T x 1	LC1F185 × 1	LV525332 × 1

Low Voltage
Capacitors

EasyLogic™ PFC HD Can + Detuned Reactor + Contactor + MCCB

PE90154_L28_r.eps

+

EasyCan03copy.eps

+

LC1D25BD.JPG

+

PB106447-02.jpg

Network 400 V, 60 Hz Capacitor Voltage 480 V 5.7 % / 7 % Detuned Filter

Effective Power (kvar)	Q_N at 480V	Capacitor Ref.	5.7% fr = 215Hz	7% fr = 190Hz	Switching: Contactor Ref.	Protection: Easypact CVS
			D R Ref	D R Ref.		(I_{CU}=36kA)Ref.
12.5	16.3	BLRCP136A163B48 × 1	LVR05125B40T × 1	LVR07125B40T × 1	LC1D18× 1	LV510331 × 1
25	34.6	BLRCP288A346B48 × 1	LVR05250B40T × 1	LVR07250B40T × 1	LC1D38 × 1	LV510334 × 1
50	69.2	BLRCP288A346B48 × 2	LVR05500B40T × 1	LVR07500B40T × 1	LC1D95 × 1	LV510337 × 1
100	138.4	BLRCP288A346B48 × 4	LVR05X00B40T ×1	LVR07X00B40T × 1	LC1F185 × 1	LV525332 × 1

Network 400 V, 50 Hz Capacitor Voltage 480 V 14 % Detuned Filter

Effective Power (kvar)	Q_N at 480 V	Capacitor Ref.	14% fr = 135Hz	Switching: Contactor Ref.	Protection: Easypact CVS
			D R Ref		(I_{CU}=36kA)Ref.
12.5	16.3	BLRCP136A163B48 × 1	LVR14125B40T × 1	LC1D18× 1	LV510331 × 1
25	30	BLRCP250A300B48 × 1	LVR14250B40T × 1	LC1D38 × 1	LV510334 × 1
50	60	BLRCP250A300B48 × 2	LVR14500B40T × 1	LC1D95 × 1	LV510337 × 1
100	120	BLRCP250A300B48 × 4	LVR14X00B40T × 1	LC1F185 × 1	LV525332 × 1

PowerLogic™ PFC Capacitor
3 Phase Capacitors

A safe, reliable, high-performance and flexible solution for power factor correction in stringent operating conditions to maximise your savings

GroupofCapacitor.eps

PowerLogic™ PFC Capacitors

Operating conditions
- For networks with insignificant non-linear loads: (N_{LL} < 20 %).
- Significant voltage disturbances.
- Standard operating temperature up to 55 °C.
- Normal switching frequency up to 7 500 /year.
- Over current handling(including harmonics) up to 1.8 x I_N.

Technology
PowerLogic™ PFC Capacitors are constructed internally with single-phase capacitor elements. Each capacitor element is manufactured with metallized polypropylene film as the dielectric, having features such as heavy edge, slope metallization and wave-cut profile to ensure increased current handling capacity and reduced temperature rise.

Sticky resin which give good thermal conductivity and mechanical stability allows the capacitor to carry higher overloads.

Stud type terminals are designed for handling higher currents for capacitors more than 30kvar.

The unique finger-proof CLAMPTITE termination is fully integrated with discharge resistors, allowing suitable access for tightening and ensuring cable termination without any loose connections.

For lower ratings, double fast-on terminals with wires are provided.

Safety
- Self-healing.
- Pressure-sensitive disconnector on all three phases independent of mechanical assembly.
- Tamper resistant non-assessible in-built discharge resistors.
- Unique Finger-proof New CLAMPTITE terminals to reduce risk of accidental contact and to ensure firm termination and maintained tightness.
- Special film resistivity and metallization profile for higher thermal efficiency, lower temperature rise and enhanced life expectancy.

High performance, Reliability and Flexibility with PowerLogic™ PFC Capacitor
- Power ratings up to 57.1 kvar in single can and compactness across the range to reduce your cubicle space up to 40%.
- Build your type tested Schneider electric solution with PowerLogic™ PFC Capacitor – Prisma, Blokset and Okken.
- In-built user assistance and warnings on the product for a delight user experience.
- Flexibility in Vertical and horizontal mounting.
- 3 Phase disconnection of Pressure sensitive disconnector at the end of life which is independent of mechanical assembly for safety and reliability.
- Use of special conductors in stacked design impregnated in resin to ensure better cooling and enhanced life.
- Metallized polypropylene with wave cut and heavy edge technology to handle over current conditions in harsh environments.
- Specially formulated sticky resin to increase the mechanical stability of capacitor elements for higher rating capacitors to ensure better cooling and extended life.
- Designed for high performance in harsh environment to ensure 30% extended life compared to standard capacitors.

Benefits
- Saving in panel space due to compact design and higher kvar range.
- High Performance & Long life.
- High over current handling.
- Unique disconnection system and in-built discharge device.
- Flexibility in installation - upright and horizontal.

PowerLogic™ PFC Capacitor
3 Phase Capacitors

VarPlus Can04copy.eps

VarPlus Can02copy.eps

Technical specifications

General characteristics		
Standards		IEC 60831-1/2
Voltage range		230 to 830 V
Frequency		50 / 60 Hz
Power range		1 to 57.1 kvar
Losses (dielectric)		< 0.2 W / kvar
Losses (total)		< 0.5 W / kvar
Capacitance tolerance		-5 %, +10 %
Voltage test	Between terminals	2.15 x U_N (AC), 10 s
	Between terminal & container	≤ 525 V: 3 kV (AC), 10 s or 3.66 kV (AC), 2 s > 525 V: 3.66 kV (AC), 10 s or 4.4 kV (AC), 2 s
	Impulse voltage	≤ 690 V: 8 kV > 690 V: 12 kV
Discharge resistor		Fitted, standard discharge time 60 s
Working conditions		
Ambient temperature		-25 / 55 °C (Class D)
Humidity		95 %
Altitude		2,000 m above sea level
Overvoltage		1.1 x U_N 8 h in every 24 h
Overcurrent		Up to 1.8 x I_N
Peak inrush current		250 x I_N
Switching operations (max.)		Up to 7 ,000 switching operations per year
Mean Life expectancy		Up to 130,000 hrs
Harmonic content withstand		N_{LL} ≤ 20 %
Installation characteristics		
Mounting position		Indoor, upright & horizontal
Fastening		Threaded M12 stud at the bottom
Earthing		
Terminals		CLAMPTITE - three-way terminal with electric shock protection (finger-proof) and, double in lower kvar and stud type for higher power ratings
Safety features		
Safety		Self-healing + Pressure-sensitive disconnector + Discharge device
Protection		IP20 (for fast-on and clamptite terminal)
Construction		
Casing		Extruded Aluminium Can
Dielectric		Metallized polypropylene film with Zn/Al alloy. Special resistivity & profile, special edge (wave-cut)
Impregnation		Non-PCB, polyurethene sticky resin (Dry)

⚠ WARNING

HAZARD OF ELECTRICAL SHOCK

Wait 5 minutes after isolating supply before handling

Failure to follow these instructions can result in injury or equipment damage

PowerLogic™ PFC Capacitor
3 Phase Capacitors

Rated Voltage 240/260 V

50 Hz				60 Hz				µF (X3)	Case Code	Reference Number
Q_N (kvar)			I_N (A)	Q_N (kvar)			I_N (A)			
230 V	240 V	260 V	at 260 V	230 V	240 V	260 V	at 260 V			
2.5	**2.7**	3.2	7.0	3.0	**3.3**	3.8	8.4	**49.7**	HC	**BLRCH027A033B24**
3.9	**4.2**	4.9	10.9	4.6	**5.0**	5.9	13.1	**77.3**	HC	**BLRCH042A050B24**
5.0	**5.4**	6.3	14.1	6.0	**6.5**	7.6	16.9	**99.4**	MC	**BLRCH054A065B24**
5.8	**6.3**	7.4	16.4	6.9	**7.5**	8.8	19.5	**116.0**	RC	**BLRCH063A075B24**
7.6	**8.3**	9.7	21.6	9.2	**10.0**	11.7	26.1	**152.4**	RC	**BLRCH083A100B24**
10.0	**10.9**	12.8	28.4	12.0	**13.0**	15.3	34.1	**200.5**	TC	**BLRCH109A130B24**
10.7	**11.7**	13.7	30.4	12.9	**14.0**	16.4	36.5	**214.8**	TC	**BLRCH117A140B24**
12.0	**13.1**	15.4	34.1	14.4	**15.7**	18.4	40.9	**240.9**	TC	**BLRCH131A157B24**

Rated Voltage 380/400/415 V

50 Hz				60 Hz				µF (X3)	Case Code	Reference Number
Q_N (kvar)			I_N (A)	Q_N (kvar)			I_N (A)			
380 V	400 V	415 V	at 400 V	380 V	400 V	415 V	at 400 V			
2.3	**2.5**	2.7	3.6	2.7	**3.0**	3.2	4.3	**16.6**	DC	**BLRCH025A030B40**
2.7	**3.0**	3.2	4.3	3.2	**3.6**	3.9	5.2	**19.9**	DC	**BLRCH030A036B40**
4.5	**5.0**	5.4	7.2	5.4	**6.0**	6.5	8.7	**33.1**	HC	**BLRCH050A060B40**
5.7	**6.3**	6.8	9.1	6.8	**7.5**	8.1	10.8	**41.8**	HC	**BLRCH063A075B40**
6.8	**7.5**	8.1	10.8	8.1	**9.0**	9.7	13.0	**49.7**	HC	**BLRCH075A090B40**
7.5	**8.3**	8.9	12.0	9.0	**10.0**	10.7	14.4	**55.0**	LC	**BLRCH083A100B40**
9.4	**10.4**	11.2	15.0	11.3	**12.5**	13.4	18.0	**68.9**	MC	**BLRCH104A125B40**
11.3	**12.5**	13.5	18.0	13.5	**15.0**	16.1	21.7	**82.9**	RC	**BLRCH125A150B40**
13.5	**15.0**	16.1	21.7	16.2	**18.0**	19.4	26.0	**99.4**	RC	**BLRCH150A180B40**
15.1	**16.7**	18.0	24.1	18.1	**20.0**	21.6	28.9	**110.7**	TC	**BLRCH167A200B40**
18.1	**20.0**	21.5	28.9	21.7	**24.0**	25.8	34.6	**132.6**	TC	**BLRCH200A240B40**
18.8	**20.8**	22.4	30.0	22.5	**25.0**	26.9	36.0	**137.9**	TC	**BLRCH208A250B40**
22.6	**25.0**	26.9	36.1	27.1	**30.0**	32.3	43.3	**165.7**	TC	**BLRCH250A300B40**
27.1	**30.0**	32.3	43.3	32.5	**36.0**	38.8	52.0	**198.9**	VC	**BLRCH300A360B40**
30.1	**33.3**	35.8	48.1	36.1	**40.0**	43.0	57.7	**220.7**	VC	**BLRCH333A400B40**
36.1	**40.0**	43.1	57.7	43.3	**48.0**	51.7	69.3	**265.2**	YC	**BLRCH400A480B40**
37.6	**41.7**	44.9	60.2	45.2	**50.0**	53.9	72.2	**276.4**	YC	**BLRCH417A500B40**
45.1	**50.0**	53.8	72.2	---	---	---	---	**331.4**	YC	**BLRCH500A000B40**

Rated Voltage 440 V

50 Hz				60 Hz				µF (X3)	Case Code	Reference Number
Q_N (kvar)			I_N (A)	Q_N (kvar)			I_N (A)			
400 V	415 V	440 V	at 440 V	400 V	415 V	440 V	at 440 V			
3.4	3.7	**4.2**	5.5	4.1	4.4	**5.0**	6.6	**23.0**	HC	**BLRCH042A050B44**
4.1	4.4	**5.0**	6.6	5.0	5.3	**6.0**	7.9	**27.4**	HC	**BLRCH050A060B44**
6.2	6.7	**7.5**	9.8	7.4	8.0	**9.0**	11.8	**41.1**	HC	**BLRCH075A090B44**
6.9	7.4	**8.3**	10.9	8.3	8.9	**10.0**	13.1	**45.5**	LC	**BLRCH083A100B44**
8.3	8.9	**10.0**	13.1	9.9	10.7	**12.0**	15.7	**54.8**	MC	**BLRCH100A120B44**
10.3	11.1	**12.5**	16.4	12.4	13.3	**15.0**	19.7	**68.5**	RC	**BLRCH125A150B44**
11.8	12.7	**14.3**	18.8	14.2	15.3	**17.2**	22.5	**78.3**	RC	**BLRCH143A172B44**
12.4	13.3	**15.0**	19.7	14.9	16.0	**18.0**	23.6	**82.2**	RC	**BLRCH150A180B44**
14.0	15.0	**16.9**	22.2	16.8	18.0	**20.0**	26.6	**92.6**	TC	**BLRCH169A203B44**
15.0	16.2	**18.2**	23.9	18.0	19.4	**21.8**	28.7	**99.7**	TC	**BLRCH182A218B44**
16.5	17.8	**20.0**	26.2	19.8	21.4	**24.0**	31.5	**109.6**	TC	**BLRCH200A240B44**
17.2	18.5	**20.8**	27.3	20.7	22.2	**25.0**	32.8	**114.1**	TC	**BLRCH208A250B44**
20.7	22.2	**25.0**	32.8	24.8	26.7	**30.0**	39.4	**137.0**	TC	**BLRCH250A300B44**
23.6	25.4	**28.5**	37.4	28.3	30.4	**34.2**	44.9	**156.1**	VC	**BLRCH285A342B44**
25.0	27.0	**30.3**	39.8	---	---	---	---	**166.0**	VC	**BLRCH303A000B44**
26.0	28.0	**31.5**	41.3	31.2	33.6	**37.8**	49.6	**172.6**	VC	**BLRCH315A378B44**
27.7	29.8	**33.5**	44.0	33.2	35.8	**40.0**	52.7	**183.5**	VC	**BLRCH335A401B44**
33.1	35.6	**40.0**	52.5	39.7	42.7	**48.0**	63.0	**219.1**	XC	**BLRCH400A480B44**
34.5	37.1	**41.7**	54.7	41.4	44.5	**50.0**	65.6	**228.7**	YC	**BLRCH417A500B44**
41.3	44.5	**50.0**	65.6	49.6	53.4	---	---	**273.9**	YC	**BLRCH500A000B44**
47.2	50.8	**57.1**	74.9	56.6	61.0	---	---	**312.8**	YC	**BLRCH571A000B44**

PowerLogic™ PFC Capacitor
3 Phase Capacitors

Rated Voltage 480 V

50 Hz				60 Hz				µF (X3)	Case Code	Reference Number
Q_N (kvar)			I_N (A)	Q_N (kvar)			I_N (A)			
400 V	415 V	480 V	at 480 V	400 V	440 V	480 V	at 480 V			
2.9	3.1	**4.2**	5.1	3.5	4.2	**5.0**	6.1	**19.3**	DC	**BLRCH042A050B48**
3.5	3.7	**5.0**	6.0	4.2	5.0	**6.0**	7.2	**23.0**	HC	**BLRCH050A060B48**
5.2	5.6	**7.5**	9.0	6.3	7.6	**9.0**	10.8	**34.5**	HC	**BLRCH075A090B48**
5.8	6.2	**8.3**	10.0	6.9	8.4	**10.0**	12.0	**38.2**	LC	**BLRCH083A100B48**
6.1	6.6	**8.8**	10.6	7.3	8.9	**10.6**	12.7	**40.5**	LC	**BLRCH088A106B48**
7.2	7.8	**10.4**	12.5	8.7	10.5	**12.5**	15.0	**47.9**	MC	**BLRCH104A125B48**
8.7	9.3	**12.5**	15.0	10.4	12.6	**15.0**	18.0	**57.5**	RC	**BLRCH125A150B48**
9.4	10.2	**13.6**	16.4	11.3	13.7	**16.3**	19.6	**62.6**	RC	**BLRCH136A163B48**
10.0	10.8	**14.4**	17.3	12.0	14.5	**17.3**	20.8	**66.3**	RC	**BLRCH144A173B48**
10.8	11.6	**15.5**	18.6	12.9	15.6	**18.6**	22.4	**71.4**	RC	**BLRCH155A186B48**
11.8	12.7	**17.0**	20.4	14.2	17.1	**20.0**	24.5	**78.3**	RC	**BLRCH170A204B48**
12.5	13.5	**18.0**	21.7	15.0	18.2	**21.6**	26.0	**82.9**	TC	**BLRCH180A216B48**
14.4	15.5	**20.8**	25.0	17.3	21.0	**25.0**	30.0	**95.7**	TC	**BLRCH208A250B48**
15.8	17.0	**22.7**	27.3	18.9	22.9	**27.2**	32.8	**104.5**	TC	**BLRCH227A272B48**
17.4	18.7	**25.0**	30.1	20.8	25.2	**30.0**	43.3	**115.2**	TC	**BLRCH250A300B48**
17.9	19.3	**25.8**	31.0	21.5	26.0	**31.0**	37.2	**118.8**	TC	**BLRCH258A310B48**
20.0	21.5	**28.8**	34.6	24.0	29.0	**34.6**	41.6	**132.6**	VC	**BLRCH288A346B48**
21.9	23.5	**31.5**	37.9	26.3	31.8	**37.8**	45.5	**145.0**	VC	**BLRCH315A378B48**
23.1	24.9	**33.3**	40.1	27.8	33.6	**40.0**	57.7	**153.4**	XC	**BLRCH333A400B48**
23.5	25.3	**33.9**	40.8	28.3	34.2	**40.7**	48.9	**156.1**	XC	**BLRCH339A407B48**
28.9	31.2	**41.7**	50.1	34.7	42.0	**50.0**	72.2	**192.1**	YC	**BLRCH417A500B48**

Rated Voltage 525 V

50 Hz				60 Hz				µF (X3)	Case Code	Reference Number
Q_N (kvar)			I_N (A)	Q_N (kvar)			I_N (A)			
415 V	480 V	525 V	at 525 V	400 V	480 V	525 V	at 525 V			
2.6	3.5	**4.2**	4.6	2.9	4.2	**5.0**	5.5	**16.2**	HC	**BLRCH042A050B52**
3.1	4.2	**5.0**	5.5	3.5	5.0	**6.0**	6.6	**19.2**	HC	**BLRCH050A060B52**
5.2	7.0	**8.3**	9.2	5.8	8.4	**10.0**	11.0	**32.0**	LC	**BLRCH083A100B52**
6.6	8.9	**10.6**	11.7	7.4	10.6	**12.7**	14.0	**40.8**	MC	**BLRCH106A127B52**
7.8	10.4	**12.5**	13.7	8.7	12.5	**15.0**	16.5	**48.1**	RC	**BLRCH125A150B52**
10.4	13.9	**16.7**	18.3	11.6	16.7	**20.0**	22.0	**64.3**	RC	**BLRCH167A200B52**
10.7	14.4	**17.2**	18.9	12.0	17.3	**20.6**	22.7	**66.2**	RC	**BLRCH172A206B52**
11.6	15.5	**18.5**	20.3	12.9	18.6	**22.2**	24.4	**71.2**	TC	**BLRCH185A222B52**
12.5	16.7	**20.0**	22.0	13.9	20.1	**24.0**	26.4	**77.0**	TC	**BLRCH200A240B52**
13.0	17.4	**20.8**	22.9	14.5	20.9	**25.0**	27.5	**80.1**	TC	**BLRCH208A250B52**
15.6	20.9	**25.0**	27.5	17.4	25.1	**30.0**	33.0	**96.2**	TC	**BLRCH250A300B52**
19.3	25.8	**30.9**	34.0	21.5	31.0	**37.1**	40.8	**118.9**	VC	**BLRCH309A371B52**
20.8	27.9	**33.3**	36.7	23.2	33.4	**40.0**	44.0	**128.3**	VC	**BLRCH333A400B52**
21.5	28.8	**34.4**	37.8	24.0	34.5	**41.3**	45.4	**132.4**	VC	**BLRCH344A413B52**
23.6	31.5	**37.7**	41.5	26.3	37.8	**45.2**	49.8	**145.1**	VC	**BLRCH377A452B52**
25.0	33.4	**40.0**	44.0	27.9	40.1	**48.0**	52.8	**153.9**	XC	**BLRCH400A480B52**
26.1	34.8	**41.7**	45.8	29.0	41.8	**50.0**	50.7	**160.6**	YC	**BLRCH417A500B52**

Rated Voltage 575 V

50 Hz				60 Hz				µF (X3)	Case Code	Reference Number
Q_N (kvar)			I_N (A)	Q_N (kvar)			I_N (A)			
480 V	550 V	575 V	at 575 V	480 V	550 V	575 V	at 575 V			
8.4	11.0	**12.0**	12.0	9.3	13.2	**14.4**	14.5	**38.5**	RC	**BLRCH120A144B57**
10.5	13.7	**15.0**	15.1	11.7	16.5	**18.0**	18.1	**48.1**	TC	**BLRCH150A180B57**
20.3	26.7	**29.2**	29.3	22.7	32.0	**35.0**	35.1	**93.6**	VC	**BLRCH292A350B57**

PowerLogic™ PFC Capacitor
3 Phase Capacitors

Rated Voltage 600 V										
50 Hz				60 Hz				µF (X3)	Case Code	Reference Number
Q_N (kvar)			I_N (A)	Q_N (kvar)			I_N (A)			
480 V	550 V	600 V	at 600 V	480 V	550 V	600 V	at 600 V			
2.7	3.5	**4.2**	4.6	3.2	4.2	**5.0**	4.8	**12.4**	LC	**BLRCH042A050B60**
8.0	10.5	**12.5**	11.7	9.6	12.6	**15.0**	14.4	**36.8**	TC	**BLRCH125A150B60**
13.3	17.5	**20.8**	14.8	16.0	21.0	**25.0**	24.0	**61.3**	VC	**BLRCH208A250B60**

Rated Voltage 690 V										
50 Hz				60 Hz				µF (X3)	Case Code	Reference Number
Q_N (kvar)			I_N (A)	Q_N (kvar)			I_N (A)			
480 V	600 V	690 V	at 690 V	480 V	600 V	690 V	at 690 V			
5.4	8.4	**11.1**	9.3	6.4	10.1	**13.3**	11.1	**24.7**	RC	**BLRCH111A133B69**
6.0	9.5	**12.5**	10.5	7.3	11.3	**15.0**	12.6	**27.8**	RC	**BLRCH125A150B69**
6.7	10.4	**13.8**	11.5	8.0	12.5	**16.5**	13.8	**30.6**	TC	**BLRCH138A165B69**
7.3	11.3	**15.0**	12.6	8.7	13.6	**18.0**	15.1	**33.4**	TC	**BLRCH150A180B69**
9.7	15.1	**20.0**	16.7	11.6	18.1	**24.0**	20.1	**44.6**	TC	**BLRCH200A240B69**
12.1	18.9	**25.0**	20.9	14.5	22.7	**30.0**	25.1	**55.7**	VC	**BLRCH250A300B69**
13.3	20.9	**27.6**	23.1	16.0	25.0	**33.1**	27.7	**61.4**	VC	**BLRCH276A331B69**
14.5	22.7	**30.0**	25.1	17.4	27.2	**36.0**	30.1	**66.8**	VC	**BLRCH300A360B69**

Rated Voltage 830 V										
50 Hz				60 Hz				µF (X3)	Case Code	Reference Number
Q_N (kvar)			I_N (A)	Q_N (kvar)			I_N (A)			
600 V	690 V	830 V	at 830 V	600 V	690 V	830 V	at 830 V			
8.9	11.8	**17.1**	11.9	10.7	14.2	**20.5**	14.3	**79.2**	VC	**BLRCH171A205B83**

PowerLogic™ PFC Capacitor harmonic applications
3 Phase Applications

PowerLogic™ PFC Capacitors are designed for applications where higher number of non-linear loads are present. Higher current carrying capacity in PowerLogic™ PFC Capacitor allows the operations in stringent conditions.

Detuned reactor *PowerLogic™*

Operating conditions
- For networks with a large number of non-linear loads (N_{LL} < 50 %).
- Significant voltage disturbances.
- Significant switching frequency up to 7 000 /year.

Rated voltage
In a detuned filter application, the voltage across the capacitors is higher than the network service voltage (U_S). Then, capacitors must be designed to withstand higher voltages.

Depending on the selected tuning frequency, part of the harmonic currents are absorbed by the detuned capacitor bank. Then, capacitors must be designed to withstand higher currents, combining fundamental and harmonic currents.

The rated voltage of PowerLogic™ PFC Capacitor capacitors is given in the table below, for different values of network service voltage and relative impedance.

Capacitor Rated Voltage U_N (V)		Network Service Voltage U_S (V)				
		50 Hz		60 Hz		
		400	690	400	480	600
Relative Impedance (%)	5.7	**480**	**830**	**480**	**575**	**690**
	7					
	14	**480**	**-**	**480**	**-**	**-**

In the following pages, the effective power (kvar) given in the tables is the reactive power provided by the combination of capacitors and reactors.

PowerLogic™ PFC Capacitor + Detuned Reactor + Contactor + MCCB

+

+

+

Network 400 V, 50 Hz Capacitor Voltage 480 V 5.7 % / 7 % Detuned Filter

Effective Power (kvar)	Q_N at 480 V	Capacitor Ref.	5.7% fr = 215Hz	7% fr = 190Hz	Switching: Contactor Ref.	Protection: Compact NSX
			D R Ref.	D R Ref.		36 kA at 380/415 V
6.5	8.8	BLRCH088A106B48 × 1	LVR05065A40T x 1	LVR07065A40T x 1	LC1D12 × 1	LV429637 × 1
12.5	17	BLRCH170A204B48 × 1	LVR05125A40T x 1	LVR07125A40T x 1	LC1D18× 1	LV429636 × 1
25	33.9	BLRCH339A407B48 × 1	LVR05250A40T x 1	LVR07250A40T x 1	LC1D38 × 1	LV429633 × 1
50	67.9	BLRCH339A407B48 × 2	LVR05500A40T x 1	LVR07500A40T x 1	LC1D95 × 1	LV429630 × 1
100	136	BLRCH339A407B48 × 4	LVR05X00A40T x 1	LVR07X00A40T x 1	LC1F185× 1	LV431631 × 1

Network 400 V, 50 Hz Capacitor Voltage 480 V 14 % Detuned Filter

Effective Power (kvar)	Q_N at 480 V	Capacitor Ref.	14% fr = 135Hz	Switching: Contactor Ref.	Protection: Compact NSX
			D R Ref.		36 kA at 380/415 V
6.5	8.8	BLRCH088A106B48 × 1	LVR14065A40T x 1	LC1D12 × 1	LV429637 × 1
12.5	15.5	BLRCH155A186B48 × 1	LVR14125A40T x 1	LC1D18× 1	LV429636 × 1
25	31.5	BLRCH315A378B48 × 1	LVR14250A40T x 1	LC1D38 × 1	LV429633 × 1
50	63	BLRCH315A378B48 × 2	LVR14500A40T x 1	LC1D95 × 1	LV429630 × 1
100	126	BLRCH315A378B48 × 4	LVR14X00A40T x 1	LC1F185 × 1	LV431631 × 1

Network 400 V, 50 Hz Capacitor Voltage 525 V 5.7 % / 7 % Detuned Filter

Effective Power (kvar)	Q_N at 525 V	Capacitor Ref.	5.7% fr = 215Hz	7% fr = 190Hz	Switching: Contactor Ref.	Protection: Compact NSX
			D R Ref.	D R Ref.		36 kA at 380/415 V
6.5	10.6	BLRCH106A127B52 × 1	LVR05065A40T x 1	LVR07065A40T x 1	LC1D12 × 1	LV429637 × 1
12.5	20	BLRCH200A240B52 × 1	LVR05125A40T x 1	LVR07125A40T x 1	LC1D18× 1	LV429636 × 1
25	40	BLRCH400A480B52 × 1	LVR05250A40T x 1	LVR07250A40T x 1	LC1D38 × 1	LV429633 × 1
50	80	BLRCH400A480B52 × 2	LVR05500A40T x 1	LVR07500A40T x 1	LC1D95 × 1	LV429630 × 1
100	160	BLRCH400A480B52 × 4	LVR05X00A40T x 1	LVR07X00A40T x 1	LC1F185 × 1	LV431631 × 1

Network 400 V, 50 Hz Capacitor Voltage 525 V 14 % Detuned Filter

Effective Power (kvar)	Q_N at 525 V	Capacitor Ref.	14% fr = 135Hz	Switching: Contactor Ref.	Protection: Compact NSX
			D R Ref.		36 kA at 380/415 V
6.5	10.6	BLRCH106A127B52 × 1	LVR14065A40T x 1	LC1D12 × 1	LV429637 × 1
12.5	18.5	BLRCH185A222B52 × 1	LVR14125A40T x 1	LC1D18× 1	LV429636 × 1
25	37.7	BLRCH377A452B52 × 1	LVR14250A40T x 1	LC1D38 × 1	LV429633 × 1
50	75	BLRCH377A452B52 × 2	LVR14500A40T x 1	LC1D95 × 1	LV429630 × 1
100	150	BLRCH377A452B52 × 4	LVR14X00A40T x 1	LC1F185 × 1	LV431631 × 1

Network 690 V, 50 Hz Capacitor Voltage 830 V 5.7 % / 7 % Detuned Filter

Effective Power (kvar)	Q_N at 830 V	Capacitor Ref.	5.7% fr = 215Hz	7% fr = 190Hz	Switching: Contactor Ref.	Protection: Compact NSX
			D R Ref.	D R Ref.		36 kA at 380/415 V
12.5	17.1	BLRCH171A205B83 × 1	LVR05125A69T × 1	LVR07125A69T × 1	LC1D12 × 1	LV429637 × 1
25	34.2	BLRCH171A205B83 × 2	LVR05250A69T × 1	LVR07250A69T × 1	LC1D25 × 1	LV429635 × 1
50	68.4	BLRCH171A205B83 × 4	LVR05500A69T × 1	LVR07500A69T × 1	LC1D50 × 1	LV429632 × 1
100	136.8	BLRCH171A205B83 × 8	LVR05X00A69T × 1	LVR07X00A69T × 1	LC1F185 × 1	LV430631 × 1

PowerLogic™ PFC Capacitor + Detuned Reactor + Contactor + MCCB

+

+

+

Network 400 V, 60 Hz Capacitor Voltage 480 V 5.7 % / 7 % Detuned Filter

Effective Power (kvar)	Q_N at 480 V	Capacitor Ref.	5.7% fr = 250Hz	7% fr = 230Hz	Switching: Contactor Ref.	Protection: Compact NSX
			D R Ref.	D R Ref.		36 kA at 380/415 V
12.5	17.3	BLRCH144A173B48 × 1	LVR05125B40T × 1	LVR07125B40T × 1	LC1D18× 1	LV429636 × 1
25	34.6	BLRCH288A346B48 × 1	LVR05250B40T × 1	LVR07250B40T × 1	LC1D38 × 1	LV429633 × 1
50	67.9	BLRCH288A346B48 × 2	LVR05500B40T × 1	LVR07500B40T × 1	LC1D95 × 1	LV429630 × 1
100	135.8	BLRCH288A346B48 × 4	LVR05X00B40T × 1	LVR07X00B40T × 1	LC1F185 x 1	LV431631 × 1

Network 400 V, 60 Hz Capacitor Voltage 480 V 14 % Detuned Filter

Effective Power (kvar)	Q_N at 480 V	Capacitor Ref.	14% fr = 160Hz	Switching: Contactor Ref.	Protection: Compact NSX
			D R Ref.		36 kA at 380/415 V
12.5	16.3	BLRCH136A163B48 × 1	LVR14125B40T × 1	LC1D18× 1	LV429636 × 1
25	31	BLRCH258A310B48 × 1	LVR14250B40T × 1	LC1D38 × 1	LV429633 × 1
50	62	BLRCH258A310B48 × 2	LVR14500B40T × 1	LC1D95 × 1	LV429630 × 1
100	124	BLRCH258A310B48 × 4	LVR14X00B40T × 1	LC1F185 × 1	LV431631 × 1

Network 480 V, 60 Hz Capacitor Voltage 575 V 5.7 % Detuned Filter

Effective Power (kvar)	Q_N at 575 V	Capacitor Ref.	5.7% fr = 250Hz	Switching: Contactor Ref.	Protection: Compact NSX
			D R Ref.		36 kA at 380/415 V
12.5	18	BLRCH150A180B57 × 1	LVR05125B48T × 1	LC1D12 × 1	LV429636 × 1
25	35	BLRCH292A350B57 × 1	LVR05250B48T × 1	LC1D38 x 1	LV429633 × 1
50	70	BLRCH292A350B57 × 2	LVR05500B48T × 1	LC1D65 × 1	LV429631 x 1
100	140	BLRCH292A350B57 × 4	LVR05X00B48T × 1	LC1F185 × 1	LV431631 × 1

Network 600 V, 60 Hz Capacitor Voltage 690 V 5.7 % Detuned Filter

Effective Power (kvar)	Q_N at 690 V	Capacitor Ref.	5.7% fr = 250Hz	Switching: Contactor Ref.	Protection: Compact NSX 36 kA at 380/415 V
			R Ref.		
12.5	16.5	BLRCH138A165B69 × 1	LVR05125B60T × 1	LC1D12 × 1	LV429636 × 1
25	33.1	BLRCH276A331B69 × 1	LVR05250B60T × 1	LC1D25 × 1	LV429634 × 1
50	66.2	BLRCH276A331B69 × 2	LVR05500B60T × 1	LC1D65	LV429631 × 1
100	132.4	BLRCH276A331B69 × 4	LVR05X00B60T × 1	LC1F185 × 1	LV430630 × 1

Can type capacitors mechanical characteristics

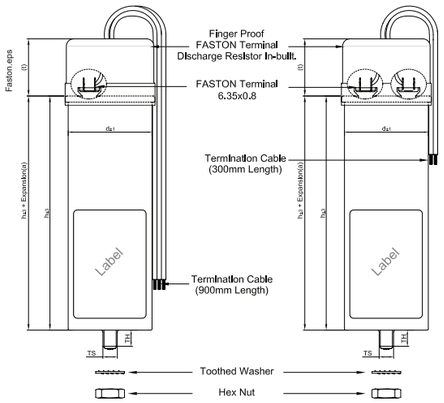

Three Phase
Case Code:
DC, EC, FC,
HC & LC.

Single Phase
Case Codes:
ECM, GCM,
KCM & LCM

Case Code: DC, HC, LC, ECM, GCM, KCM

Creepage distance	min.16 mm
Clearance	min.16 mm
Expansion (a)	max.10 mm

Mounting details (for M10/M12 mounting stud)

Torque	M10: 7 N.m M12: 10 N.m
Toothed washer	M10/M12
Hex nut	M10/M12
Terminal assembly Ht. (t)	50 mm

Size (d)	TS	TH
Ø 50	M10	10 mm
Ø 63	M12	13 mm
Ø 70	M12	16 mm

Case code	Diameter d (mm)	Height h (mm)	Height h + t (mm)	Weight (kg)
DC	50	195	245	0.7
EC/ECM	63	90	140	0.5
FC	63	115	165	0.5
HC	63	195	245	0.9
GCM	63	140	190	0.6
KCM	70	140	190	0.6
LC/LCM	70	195	245	1.1

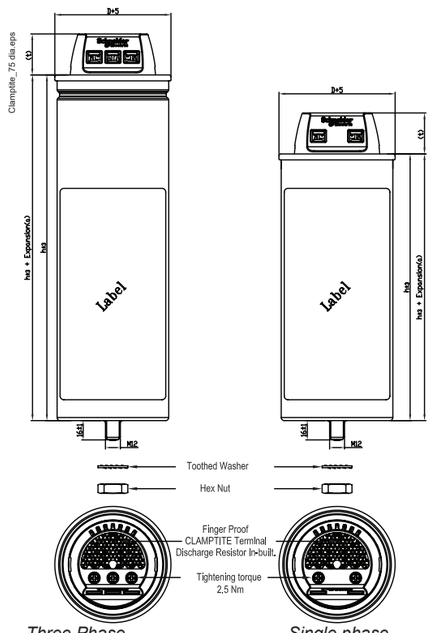

Three Phase
Case Code: MC, NC, RC & SC

Single phase
case code: RCM

Case Code: MC, NC, RC, RCM & SC

Creepage distance	min.13 mm
Clearance	min.13 mm
Expansion (a)	max.12 mm

Mounting details (for M12 mounting stud)

Torque	T = 10 Nm
Toothed washer	J12.5 DIN 6797
Hex nut	BM12 DIN 439
Terminal screw	M5
Terminal assembly Ht. (t)	30 mm

Case code	Diameter d (mm)	Height h (mm)	Height h + t (mm)	Weight (kg)
MC	75	203	233	1.2
NC	75	278	308	1.2
RC/RCM	90	212	242	1.6
SC	90	278	308	2.3

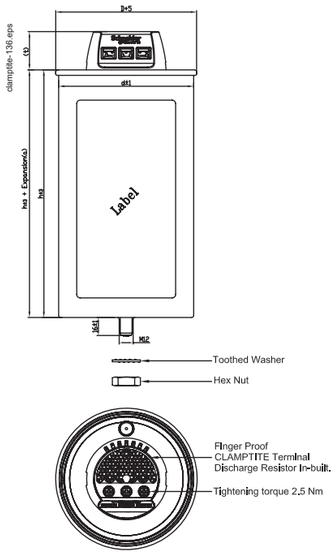

Three Phase
Case Code: TC, UC & VC

Case Code: TC, UC & VC

Creepage distance	min.13 mm
Clearance	min.13 mm
Expansion (a)	max.12 mm

Mounting details (for M12 mounting stud)

Torque	T = 10 Nm
Toothed washer	J12.5 DIN 6797
Hex nut	BM12 DIN 439
Terminal screw	M5
Terminal assembly Ht. (t)	30 mm

Case code	Diameter d (mm)	Height h (mm)	Height h + t (mm)	Weight (kg)
TC	116	212	242	2.5
UC	116	278	308	3.5
VC	136	212	242	3.2

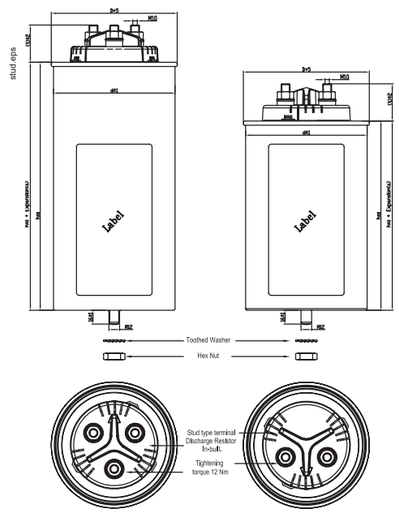

Three Phase
Case Code: XC & YC

Single Phase
Case Code: TCM & VCM

Case Code: XC & YC

Creepage distance	min.13 mm
Clearance	34 mm
Expansion (a)	max.17 mm

Mounting details (for M12 mounting stud)

Torque	T = 10 Nm
Toothed washer	J12.5 DIN 6797
Hex nut	BM12 DIN 439
Terminal screw	M10
Terminal assembly Ht. (t)	43 mm

Case code	Diameter d (mm)	Height h (mm)	Height h + t (mm)	Weight (kg)
TCM	116	212	255	3.5
VCM	136	212	255	4.0
XC	116	278	321	4.1
YC	136	285	328	5.3

PowerLogic™ PFC Xtreme Heavy Duty Capacitor Box

A robust, safe, reliable and high-performance solution for power factor correction in standard operating conditions.

PE90137

PowerLogic™ PFC Xtreme Heavy Duty Capacitor Box

Operating conditions
- Optimum solution for stand alone PF compensation
- For networks with significant non-linear loads (NLL ≤ 25 %).
- Higher operating temperature up to 60 °C.
- Higher number of switching operations up to 10000/year.
- Higher Long life expectancy up to 150,000 hours.

PowerLogic™ PFC Xtreme Heavy Duty Capacitor Box – Answer for high performance with robustness

Safety
- Its unique safety feature electrically disconnects the capacitors safely at the end of their useful life.
- The disconnectors are installed on each phase, which makes the capacitors very safe, in addition to the protective steel enclosure.
- Use of Aluminum inside the steel enclosure eliminates the risk of any fire hazards unlike with plastic cells.

High performance
- Heavy edge metallization/wave-cut edge to ensure high inrush current capabilities and high current handling.
- Special resistivity and profile metallization for better self-healing & enhanced life.

Robustness
- Double metallic protection.
- Mechanically well suited for “stand-alone” installations.

Technology
Constructed internally with single-phase capacitor elements.

The design is specially adapted for mechanical robustness and stability and designed for harsh environments. The enclosures of the units are designed to ensure that the capacitors operate reliably in hot and humid tropical conditions, without the need of any additional ventilation louvres (see technical specifications).

Special attention is paid to equalization of temperatures within the capacitor enclosures since this gives better overall performance.

Benefits
- Robustness with double metal protection (Aluminum cans inside steel box)
- Suitable for individual compensation with stand alone installation.
  - Direct connection to a machine, in harsh environmental conditions.
- Dual safety
  - Pressure Sensitive Disconnector(PSD) in aluminum cans with metal enclosure

PowerLogic™ PFC Xtreme Heavy Duty Capacitor Box

Technical specifications

General characteristics		
Standards		IEC 60831-1/2
Voltage range		400 to 525 V
Frequency		50 / 60 Hz
Power range		5 to 75 kvar
Losses (dielectric)		< 0.2 W / kvar
Losses (total)		< 0.5 W / kvar
Capacitance tolerance		-5 %, +10 %
Voltage test	Between terminals	2.15 x U_N (AC), 10 s
	Between terminal & container	≤ 525 V: 3 kV (AC), 10 s or 3.66 kV (AC), 2 s > 525 V: 3.66 kV (AC), 10 s or 4.4 kV (AC), 2 s
	Impulse voltage	≤ 690 V: 8 kV
Discharge resistor		Fitted, standard discharge time 60 s
Working conditions		
Ambient temperature		-25 / 60 °C
Humidity		95 %
Altitude		2,000 m above sea level
Overvoltage		1.1 x U_N 8h in every 24 h
Overcurrent		Up to 1.8 x I_N
Peak inrush current		350 x I_N
Switching operations (max.)		Up to 10000 switching operations per year
Mean Life expectancy		Up to 150,000 hrs
Harmonic content withstand		N_{LL} ≤ 25 %
Installation characteristics		
Mounting position		Indoor, upright
Fastening		Mounting cleats
Earthing		
Terminals		Bushing terminals designed for large cable termination
Safety features		
Safety		Self-healing + Pressure-sensitive disconnector for each phase + Discharge device
Protection		IP20
Construction		
Casing		Sheet steel enclosure
Dielectric		Metallized polypropylene film with Zn/Al alloy. special resistivity & profile. Special edge (wave-cut)
Impregnation		Non-PCB, polyurethene soft resin.

⚠ WARNING

HAZARD OF ELECTRICAL SHOCK

Wait 5 minutes after isolating supply before handling

Failure to follow these instructions can result in injury or equipment damage

PowerLogic™ PFC Xtreme Heavy Duty Capacitor

Rated Voltage 380/400/415 V

50 Hz				60 Hz				µF (X3)	Case Code	Reference Number
Q_N (kvar)			I_N (A)	Q_N (kvar)			I_N (A)			
380 V	400 V	415 V	at 400 V	380 V	400 V	415 V	at 400 V			
18.8	**20.8**	22.4	30.0	22.6	**25.0**	26.9	36.1	**137.9**	GB	**BLRBH208A250B40**
22.6	**25.0**	26.9	36.1	27.1	**30.0**	32.3	43.3	**165.7**	GB	**BLRBH250A300B40**
37.6	**41.7**	44.9	60.2	45.1	**50.0**	53.8	72.2	**276.4**	IB	**BLRBH417A500B40**
45.1	**50.0**	53.8	72.2	---	---	---		**331.4**	IB	**BLRBH500A000B40**

Rated Voltage 480 V

50 Hz				60 Hz				µF (X3)	Case Code	Reference Number
Q_N (kvar)			I_N (A)	Q_N (kvar)			I_N (A)			
400 V	415 V	480 V	at 480 V	400 V	440 V	480 V	at 480 V			
17.9	19.3	**25.8**	31.0	21.5	26.0	**31.0**	37.2	**118.8**	IB	**BLRBH258A310B48**
29.0	31.2	**41.7**	50.2	34.8	42.0	**50.0**	60.2	**192.0**	IB	**BLRBH417A500B48**
43.0	46.3	**61.9**	74.5	---	---	---		**284.9**	IB	**BLRBH619A000B48**
47.2	50.8	**68**	81.8	---	---	---	---	**192.0**	IB	**BLRBH680A000B48**

Rated Voltage 525 V

50 Hz				60 Hz				µF (X3)	Case Code	Reference Number
Q_N (kvar)			I_N (A)	Q_N (kvar)			I_N (A)			
415 V	480 V	525 V	at 525 V	400 V	480 V	525 V	at 525 V			
15.6	20.9	**25.0**	27.5	17.4	25.1	**30.0**	33.0	**96.2**	GB	**BLRBH250A300B52**
25.0	33.4	**40.0**	44.0	27.9	40.1	**48.0**	52.8	**153.9**	IB	**BLRBH400A480B52**
46.9	62.7	**75**		---	---	---	---	**96.2**	IB	**BLRBH750A000B52**

PowerLogic™ PFC Xtreme Heavy Duty Capacitor Box harmonic applications

PowerLogic™ PFC Xtreme Heavy Duty Capacitor Boxs are designed for applications where higher number of non-linear loads are present. Higher current carrying capacity in PowerLogic™ PFC Xtreme Heavy Duty Capacitor Box allows the operations in stringent conditions and dedicated for standalone applications.

Detuned reactor *PowerLogic™ PFC Xtreme Heavy Duty Capacitor Box*

Operating conditions

- For networks with a large number of non-linear loads (N_{LL} < 50 %).
- Significant voltage disturbances.
- Very frequent switching operations, up to 10000/ year.

Rated voltage

In a detuned filter application, the voltage across the capacitors is higher than the network service voltage (U_S). Then, capacitors must be designed to withstand higher voltages.

Depending on the selected tuning frequency, part of the harmonic currents is absorbed by the detuned capacitor bank. Then, capacitors must be designed to withstand higher currents, combining fundamental and harmonic currents.

The rated voltage of PowerLogic™ PFC Xtreme Heavy Duty Capacitor Box is given in the table below, for different values of network service voltage and relative impedance.

Capacitor Rated Voltage U_N (V)		Network Service Voltage U_s (V)	
		50 Hz	60 Hz
		400	400
Relative Impedance (%)	5.7	480	480
	7		
	14	480	480

In the following pages, the effective power (kvar) given in the tables is the reactive power provided by the combination of capacitors and reactors.

PowerLogic™ PFC Xtreme Heavy Duty Capacitor Box + Detuned Reactor + Contactor + MCCB

PE80154_L28_r.eps

+

PE80134_L28_r.eps

+

LC1D258D.JPG

+

PB110417.eps

Network 400 V, 50 Hz Capacitor Voltage 480 V 5.7 % / 7 % Detuned Reactor

Effective Power (kvar)	Q_N at 480 V	Capacitor Ref.	5.7% fr = 215Hz	7% fr = 190Hz	Switching: Contactor Ref.	Protection: Compact NSX 50 kA at 380/415 V
			D R Ref.	D. R Ref.		
12.5	17.1	BLRBH171A205B48 × 1	LVR05125A40T x 1	LVR07125A40T x 1	LC1D18× 1	LV429846 × 1
25	33.9	BLRBH339A407B48 × 1	LVR05250A40T x 1	LVR07250A40T x 1	LC1D38 x 1	LV429843 × 1
50	67.9	BLRBH339A407B48 × 2	LVR05500A40T x 1	LVR07500A40T x 1	LC1D95 x 1	LV429840 × 1
100	136.2	BLRBH339A407B48 × 4	LVR05X00A40T x 1	LVR07X00A40T x 1	LC1F185 x 1	LV431831 × 1

Network 400 V, 50 Hz Capacitor Voltage 480 V 14 % Detuned Reactor

Effective Power (kvar)	Q_N at 480 V	Capacitor Ref.	14% fr = 135Hz	Switching: Contactor Ref.	Protection: Compact NSX 50 kA at 380/415 V
			D R Ref.		
12.5	15.6	BLRBH156A187B48 × 1	LVR14125A40T x 1	LC1D18× 1	LV429846 × 1
25	31.5	BLRBH315A378B48 × 1	LVR14250A40T x 1	LC1D38 x 1	LV429843 x 1
50	61.9	BLRBH619A000B48 × 1	LVR14500A40T x 1	LC1D95 x 1	LV429840 x 1
100	123.8	BLRBH619A000B48 × 2	LVR14X00A40T x 1	LC1F185 x 1	LV431831 x 1

Network 400 V, 60 Hz Capacitor Voltage 480 V 5.7 % / 7 % Detuned Reactor

Effective Power (kvar)	Q_N at 480 V	Capacitor Ref.	5.7% fr = 250Hz	7% fr = 230Hz	Switching: Contactor Ref.	Protection: Compact NSX 50 kA at 380/415 V
			D R Ref.	D. R Ref.		
25	34.6	BLRBH288A346B48 × 1	LVR05250B40T × 1	LVR07250B40T × 1	LC1D32 × 1	LV429843 × 1
50	69.2	BLRBH288A346B48 × 2	LVR05500B40T × 1	LVR07500B40T × 1	LC1D95 x 1	LV429840 × 1
100	138.4	BLRBH288A346B48 × 4	LVR05X00B40T × 1	LVR07X00B40T × 1	LC1F195 x 1	LV431831 × 1

Network 400 V, 60 Hz Capacitor Voltage 480 V 14 % Detuned Reactor

Effective Power (kvar)	Q_N at 480 V	Capacitor Ref.	14% fr = 160Hz	Switching: Contactor Ref.	Protection: Compact NSX 50 kA at 380/415 V
			D R Ref.		
25	31	BLRBH258A310B48 × 1	LVR14250B40T × 1	LC1D38 x 1	LV429843 x 1
50	62	BLRBH258A310B48 × 2	LVR14500B40T × 1	LC1D95 x 1	LV429840 x 1
100	124	BLRBH258A310B48 × 4	LVR14X00B40T × 1	LC1F185 x 1	LV431831 x 1

PowerLogic™ PFC Xtreme Heavy Duty Capacitor Box Mechanical characteristics

Case Code: DB, EB, FB, GB & HB

Creepage distance		30 mm
Clearance		
	Phase to phase	25 mm (min.)
	Phase to earth	19 mm (min.)

Mounting details: mounting screw M6, 2 Nos.

Case code	W1 (mm)	W2 (mm)	W3 (mm)	H (mm)	D (mm)	Weight (kg)
DB	263	243	213	355	97	4.8
EB	263	243	213	260	97	3.6
FB	309	289	259	355	97	5.4
GB	309	289	259	355	153	7.5
HB	309	289	259	455	153	8.0

DB402730.eps

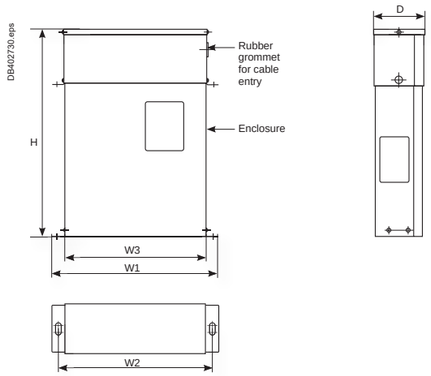

Case Code: IB

Creepage distance		30 mm
Clearance		
	Phase to phase	25 mm (min.)
	Phase to earth	19 mm (min.)

Mounting details: mounting screw M6, 2 Nos.

Case code	W1 (mm)	W2 (mm)	W3 (mm)	H (mm)	D (mm)	Weight (kg)
IB	309	289	259	497	224	10.0

DB402731.eps

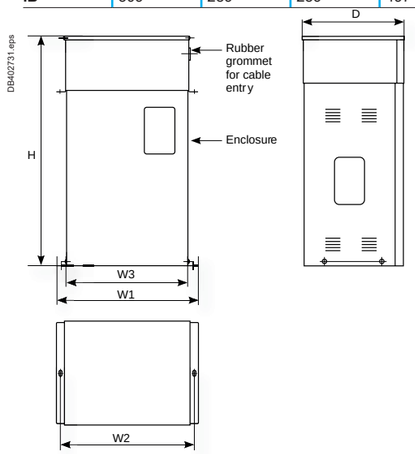

Contents

Presentation
Power Factor Correction guideline 3
Low Voltage capacitors 15

Powerlogic™ PFC Detuned Reactor 50

Power Factor controllers 55
Contactors 63
Appendix 69

Powerlogic™ PFC Detuned Reactor

3 Phase Detuned reactors

The detuned reactors (DR) are designed to protect the capacitors by preventing amplification of the harmonics present on the network.

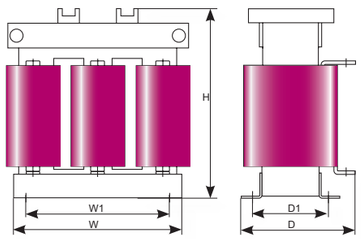

For dimensions and more details, please consult us.

Operating conditions

- Use: indoor.
- Storage temperature: -40 °C, +60 °C.
- Relative humidity in operation: 20-80 % .
- Operating temperature:
  - altitude: ≤ 1000 m: Min = 0 °C, Max = 55 °C, highest average over 1 year = 40 °C, 24 hours = 50 °C.
  - altitude: ≤ 2000 m: Min = 0 °C, Max = 50°C, highest average over 1 year = 35 °C, 24 hours = 45°C.

Installation guidelines

- Forced ventilation required.
- Vertical detuned reactor winding for better heat dissipation.

As the detuned reactor is provided with thermal protection, the normally closed dry contact must be used to disconnect the step in the event of overheating.

Technical specifications

General characteristics	
Description	Three-phase, dry, magnetic circuit, impregnated
Applicable Standards	IEC 60076-6
Degree of protection	IP00
Rated voltage	400 to 690 V - 50 Hz 400 to 600 V - 60 Hz Other voltages on request
Inductance tolerance per phase	-5, +5 %
Insulation level	1.1 kV
Continious overload factor on fundamental current for reactor design	10%
Saturation current	1.8 x I_1
Dielectric test 50/60 Hz between windings and windings/earth	4 kV, 1 min
Thermal protection	Thermal sensor inside the winding connected to a NO contact of 250 V AC, 2 A

Let's define the fundamental current I_1(A) as the current absorbed by the capacitor and detuned reactor assembly, when a purely sinusoidal voltage is applied, equal to the network service voltage U_S(V).

$I_1 = Q\ (kvar) / (\sqrt{3} \times U_S)$

In order to operate safely in real conditions, a detuned reactor must be designed to accept a maximum permanent current (I_{MP}) taking account of harmonic currents and voltage fluctuations.The following table gives the typical percentage of harmonic currents considered for the different tuning orders.

(%)	% of Harmonic currents			
Tuning order / Relative Impedance	i_3	i_5	i_7	i_{11}
2.7 / 14%	**5**	**15**	**5**	**2**
3.8 / 7%	**3**	**40**	**12**	**5**
4.2 / 5.7%	**2**	**63**	**17**	**5**

Voltage harmonic spectrum					
V_1	V_3	V_5	V_7	V_{11}	V_{13}
100%	0,5%	6,0%	5,0%	3,5%	3,0%

Detuned reactor has to be protectced from over currents with MCCB. A 1.1 factor is applied in order to allow long-term operation at a supply voltage up to (1.1 x U_S).

$I_{MP} = 1.1 \times I_1 + I_3 + I_5 + I_7 + I_{11}$

The maximum permanent current (I_{MP}) as well as the limits of Total voltage harmonics distortion are given in the following table for different tuning orders:

Tuning order	I_{MP} (times I_S)	Max THD_U Limit
2.7 / 14%	1.12	8%
3.8 / 7%	1.2	7%
4.2 / 5.7%	1.3	6%

⚠ WARNING

Force ventilation is mandatory while installing detuned reactors.
It is mandatory to connect thermal protection contact to trip the breaker while connecting detuned reactors.
The temperature around the reactor, should be maintained < 50 degrees, to which it is designed (Operating temperature of panel) through proper ventilation.

Powerlogic™ PFC Detuned reactors

Network voltage 400 V, 50 Hz

50 Hz Relative Impedance (%)	kvar	Inductance (mH)	I_1	I_{MP} (A)	Max losses at I_1(W)	Max losses at I_{MP}(W)	Max losses at I_{MP}(W) with full sprectrum	W (mm)	W1 (mm)	D (mm)	D1 (mm)	H (mm)	Weight (kg)	Reference Number
5.70% (4.2)	6.5	4.727	9.3	12	50	65	100	240	200	160	125	220	9	**LVR05065A40T**
	12.5	2.445	18.1	24	80	100	150	240	200	160	125	220	13	**LVR05125A40T**
	25	1.227	36	47	90	115	200	240	200	160	125	220	18	**LVR05250A40T**
	50	0.614	72	95	130	215	320	260	200	200	125	270	24	**LVR05500A40T**
	100	0.307	144	190	200	345	480	350	200	220	125	350	46	**LVR05X00A40T**
7% (3.8)	6.5	5.775	9.5	11	40	55	100	240	200	160	125	220	8	**LVR07065A40T**
	12.5	2.987	18.3	22	70	95	150	240	200	160	125	220	10	**LVR07125A40T**
	25	1.499	36.5	43	100	140	200	240	200	160	125	220	15	**LVR07250A40T**
	50	0.750	73	86	140	200	320	260	200	200	125	270	22	**LVR07500A40T**
	100	0.375	145.9	172	260	365	480	350	200	220	125	350	37	**LVR07X00A40T**
14% (2.7)	6.5	11.439	10.2	10	80	95	100	240	200	160	125	220	10	**LVR14065A40T**
	12.5	6.489	18	20	110	135	150	240	200	160	125	220	15	**LVR14125A40T**
	25	3.195	36.6	40	150	185	200	240	200	160	125	220	22	**LVR14250A40T**
	50	1.598	73.2	80	290	360	400	260	200	200	125	270	33	**LVR14500A40T**
	100	0.799	146.3	160	450	550	600	350	200	220	125	350	55	**LVR14X00A40T**

Network voltage 690 V, 50 Hz

50 Hz Relative Impedance (%)	kvar	Inductance (mH)	I_1	I_{MP} (A)	Max losses at I_1(W)	Max losses at I_{MP}(W)	Max losses at I_{MP}(W) with full sprectrum	W (mm)	W1 (mm)	D (mm)	D1 (mm)	H (mm)	Weight (kg)	Reference Number
5.70% (4.2)	12.5	7.28	10.5	13.3	70	110	150	240	200	160	125	220	13	**LVR05125A69T**
	25	3.654	20.9	27	70	125	200	240	200	160	125	220	18	**LVR05250A69T**
	50	1.827	41.7	53	120	210	320	260	200	200	125	270	30	**LVR05500A69T**
	100	0.913	83.4	106	230	395	600	350	200	220	125	350	42	**LVR05X00A69T**
7% (3.8)	12.5	8.893	10.6	12	70	95	150	240	200	160	125	220	13	**LVR07125A69T**
	25	4.464	21.1	24	70	100	200	240	200	160	125	220	18	**LVR07250A69T**
	50	2.232	42.3	47	160	215	320	260	200	200	125	270	22	**LVR07500A69T**
	100	1.116	84.6	94	260	355	480	350	200	220	125	350	40	**LVR07X00A69T**

Network voltage 230 V, 50 Hz

50 Hz Relative Impedance (%)	kvar	Inductance (mH)	I_1	I_{MP} (A)	Max losses at I_1(W)	Max losses at I_{MP}(W)	Max losses at I_{MP}(W) with full sprectrum	W (mm)	W1 (mm)	D (mm)	D1 (mm)	H (mm)	Weight (kg)	Reference Number
5.70% (4.2)	6.5	1.651	15.4	20	40	65	100	240	200	160	125	220	8	**LVR05065A23T**
	12.5	0.794	32	42	50	85	150	240	200	160	125	220	13	**LVR05125A23T**
	25	0.397	63.9	84	80	140	200	240	200	160	125	220	18	**LVR05250A23T**

Note:
1. Use the Max losses at I_{MP}(W) with full sprectrum for sizeing the capacitor bank (Panel design & ventilation)
2. The dimensions mentioned above are the maximum limits.

Powerlogic™ PFC
Detuned reactors

Network voltage 400 V, 60 Hz

50 Hz

Relative Impedance (%)	kvar	Inductance (mH)	I_{MP} (A)	Max losses at I_1(W)	Max losses at I_{MP}(W)	Max losses at I_{MP} (W) with full sprectrum	W (mm)	W1 (mm)	D (mm)	D1 (mm)	H (mm)	Weight (kg)	Reference Number
5.70% (4.2)	12.5	2.005	24	60	105	150	240	200	160	125	220	10	**LVR05125B40T**
	25	1.000	48.1	60	105	200	240	200	160	125	220	17	**LVR05250B40T**
	50	0.500	96.3	120	200	320	260	200	200	125	270	22	**LVR05500B40T**
	100	0.250	192.5	200	350	480	350	200	220	125	350	39	**LVR05X00B40T**
7% (3.8)	12.5	2.450	21.8	80	115	150	240	200	160	125	220	9	**LVR07125B40T**
	25	1.221	43.8	90	130	200	240	200	160	125	220	15	**LVR07250B40T**
	50	0.611	87.6	150	200	320	260	200	200	125	270	22	**LVR07500B40T**
	100	0.305	175.3	240	330	480	350	200	220	125	350	35	**LVR07X00B40T**
14% (2.7)	12.5	5.139	21	110	135	150	240	200	160	125	220	13	**LVR14125B40T**
	25	2.704	39.9	140	170	200	240	200	160	125	220	18	**LVR14250B40T**
	50	1.352	79.8	250	305	400	260	200	200	125	270	33	**LVR14500B40T**
	100	0.676	159.7	370	460	600	350	200	220	125	350	54	**LVR14X00B40T**

Network voltage 480 V, 60 Hz

50 Hz

Relative Impedance (%)	kvar	Inductance (mH)	I_{MP} (A)	Max losses at I_1(W)	Max losses at I_{MP}(W)	Max losses at I_{MP} (W) with full sprectrum	W (mm)	W1 (mm)	D (mm)	D1 (mm)	H (mm)	Weight (kg)	Reference Number
5.70% (4.2)	12.5	2.764	20.9	60	95	150	240	200	160	125	220	13	**LVR05125B48T**
	25	1.421	40.6	70	120	200	240	200	160	125	220	18	**LVR05250B48T**
	50	0.710	81.3	120	210	320	260	200	200	125	270	25	**LVR05500B48T**
	75	0.474	121.9	180	310	480	350	200	220	125	350	35	**LVR05X00B48T**
	100	0.355	162.6	210	360	480	350	200	220	125	350	40	**LVR05X00B48T**
	150	0.237	243.9	260	440	600	350	200	220	125	350	50	**LVR05X00B48T**

Contents

Presentation
Power Factor Correction guideline 3
Low Voltage capacitors 15
Detuned reactors 43

Easylogic™ PFC RT Controller Series 50
RT6, RT8 and RT12

Powerlogic™ PFC VL Controller Series 52
VL6 and VL12

Contactors 57
Appendix 61

Easylogic™ PFC RT Controller series
RT6, RT8 and RT12

The Easylogic™ PFC controllers permanently monitor the reactive power of the installation and control the connection and disconnection of capacitor steps in order to obtain the targeted power factor.

PE90155.eps

Easylogic™ PFC Controller RT6, RT8 and RT12

Performance
- Permanent monitoring of the network and equipment.
- Information provided about equipment status.
- New control algorithm designed to reduce the number of switching operations and quickly attain the targeted power factor.

Simplicity
- Simplified programming and possibility of intelligent self set-up.
- Ergonomic layout of control buttons.
- Quick and simple mounting and wiring.
- A special menu allows controller self-configuration.

User-friendliness
The large display allows:
- Direct viewing of installation electrical information and capacitor stage condition.
- Direct reading of set-up configuration.
- Intuitive browsing in the various menus (indication, commissioning, configuration).
- Alarm indication.

Range

Type	Number of step output contacts	Part number
RT6	6	**51207**
RT8	8	**51209**
RT12	12	**51213**

Technical specifications

General characteristics		
Protection Index		
	Front panel	IP41
	Rear	IP20
	Shock test	IK06
Technical Characteristics		
Display		4 digit 7 segment Red LEDs
Measuring current		0 to 5 A
Number of steps		6 (RT6), 8(RT8), 12(RT12)
Supply voltage (V AC) 50/60Hz		320 to 460 V
Dimensions		143 x 143 x 67 mm
Mounting		Flush panel mounting
Switch board cut-out		139 x 139 mm
Weight		0.8 Kg
Operating temperature		0°C – 55°C
Alarm contact		1 N/O contact
Alarm conditions		The alarm relay will activate for 1. Over voltage 2. Low power factor 3. Over compensation
Output contact		3A/ 250V - 1A/400V
Connection		Phase-to-phase
CT range		10000/5 A
cosφ Setting range		0.85 ind. … 1
Possibility of a dual cosφ target		No
Accuracy		±2 %
Micro cut voltage protection		Yes, if less than 30% of nominal voltage condition for more than 20ms controller disconnects the steps
Response delay time		10 to 1800 s
Reconnection delay time		10 to 1800 s
4-quadrant operation for generator application		No, Only suitable for 2-quadrant applications
Standards		
	IEC	EMC - IEC 61326 - IEC 61000-6-2, IEC 61000-6-4
	Safety	EN 61010-1

Powerlogic™ PFC VL Controller series
VL6, VL12

Powerlogic™ PFC Controller has all what you need for the simple and efficient operation of your automatic power factor correction equipment to maintain your power factor. It is a simple and intelligent relay which measure, monitor and controls the reactive energy. Easy commissioning, step size detection and monitoring makes it different from others in the market.

DB417842 Présentation.eps

Powerlogic™ PFC Controller VL6, VL12

Capacitor bank step monitoring
- Monitoring of all the connected capacitor steps.
- Real time power in “kvar” for the connected steps .
- Remaining step capacity per step as a % of the original power since installation.
- Derating since installation.
- Number of switching operations of every connected step.

System Measurement and monitoring
- THD(u) and THD(u) Spectrum 3rd to 19th – Measurement, Display and Alarm.
- Measurement of DQ – “kvar” required to achieve target cos phi.
- Present cabinet temperature and maximum recorded temperature.
- System parameters – Voltage, Current, Active, reactive and apparent power.
- Large LCD display to monitor real step status and other parameters.

Easy Commissioning
- Automatic Initialization and automatic step detection to do a auto commissioning.
- Automatic wiring correction - voltage and current input wiring correction.
- 1A or 5A CT secondary compatible.

Flexibility to the panel builder and retrofitting
- No step sequence restriction like in the traditional relays.
- Any step sequences with auto detect. No programming needed.
- Easy to retrofit the faulty capacitor with different power.
- Quick and simple mounting and wiring.
- Connect to the digitized Schneider solutions through RS485 communication in Modbus protocol.
- Seamless connection to the Schneider software and gateways.

Do more with Powerlogic™ PFC Controller
- Programmable alarms with last 5 alarms log.
- Suitable for medium voltage applications.
- Suitable for 4 quadrant operations.
- Dual cos phi control through digital inputs or export power detection.
- Dedicated alarm and fan control relays.
- Advance expert programming Menu to configure the controller the way you need.
- New control algorithm designed to reduce the number of switching operations and quickly attain the targeted power factor.

Alarms
- Faulty Step
- Configurable alarm for step derating
- THDu Limit alarm.
- Temperature alarm
- Self correction by switching off the steps at the event of THDu alarm, temperature alarm and overload limit alarm.
- Under compensation alarm
- Under/Over Voltage Alarm
- Low/High Current Alarm
- Overload limit alarm
- Hunting alarm
- Maximum operational limits - Time and number of switching

Range

Type	Number of step output contacts	Part number
VL6	06	**VPL06N**
VL12	12	**VPL12N**

General characteristics

Voltage and current Input	
Direct supply voltage	90 – 550 V, 1ph, 50/60 Hz
	VA Burden: 6 VA
	300 V LN / 519 V LL CAT III or 550 V CAT II
Type of input connection	Phase to phase or phase to neutral
Protection against voltage dips	Automatic disconnection of steps for dips > 15 ms (protection of capacitor)
CT secondary	1A or 5A compatible
CT primary range	Up to 9600 A
Current	15 mA – 6 A, 1PH,
	VA Burden : < 1 VA
Connection terminals	Screw type, pluggable. Section: 0.2 – 2.5 mm2 (0.2 – 1 mm 2 for Modbus and digital inputs)
Power factor settings & algorithm selection	
Regulation setting - Programmable	From Cos Phi 0.7c to 0.7i
Reconnection time -Programmable	From 1 to 6500 s
Response time -Programmable	From 1 to 6500 s
Possibility of dual cos Phi target	Yes, Through Digital Input or if export power detected
Program algorithm	AUTOMATIC (best fit) - Default
	LIFO
	PROGRESSIVE
Import export application compatibility	4- Quadrant operation for generator application
Program intelligence	
Automatic Initialization and Automatic bank detection	Yes
Detection and display of power, number of switching & derating of all connected steps	Yes
Capacitor bank step sequence	Any sequence. No restriction/limitation on sequence

Dimensions

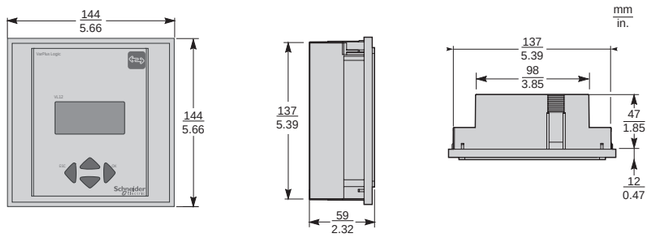

Mounting

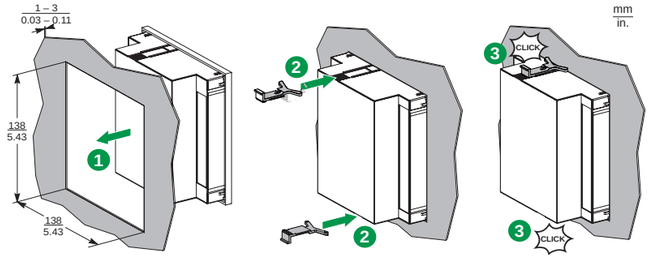

Phase-to-Neutral with VTs (3PH4W)

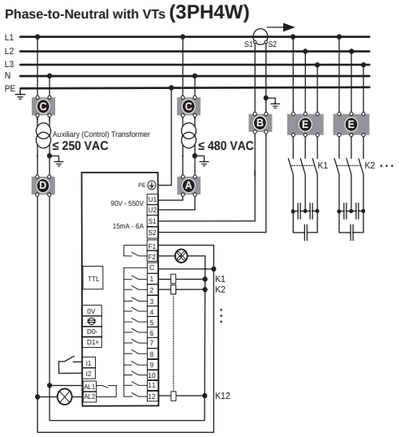

Phase-to-Phase with VTs (3PH3W)

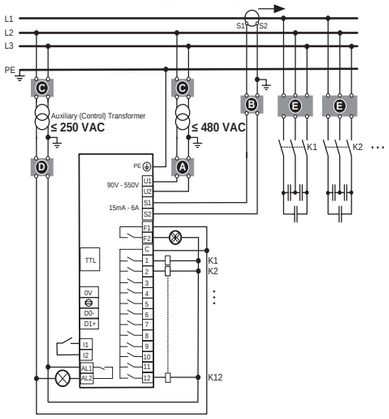

- **A** Upstream protection
  Voltage input: 2A certified circuit breakers or fuses
- **B** Shorting block for CT
- **C** VT primary fuses and disconnect switch
- **D** Output relays: 10 A (max.) certified circuit breakers or fuses (Applicable for applications with voltage transformers only).
- **E** Capacitor primary fuses or CB's

General characteristics

Alarm and control	
Control outputs (step output)	VL6: 6 relays VL12: 12 relays (NO contact)
	250 V LN or LL (CAT III)
	DC Rating : 48 V DC / 1 A
	AC Rating : 250 V AC / 5 A
	Common root: 10 A max.
Dedicated fan control relay	Yes. Normal open contact (NO)
	48 V DC / 1 A, 250 V AC / 5 A
Alarm contact	The relay contact is open when the controller is energized with no alarm and will close in the event of an alarm.The relay is a NC (Normally Close) when the controller is not energized.
	Rating : 48 V DC / 1 A, 250 V AC / 5 A
Digital Input for Cos phi2 target	Dry contact (internal supply 5 V, 10 mA)
Modbus RS-485 serial port (RTU)	Line polarization / termination, not included
Communication protocol	Modbus
Interface TTL	Service port. Only for internal use
Internal Temperature probe	Yes
Display and measurement	
Display	LCD graphic 56 x 25 (Backlit)
Alarms log	5 last alarms
Voltage Harmonic Distortion measurement	THDu ; Individual odd harmonics distortion from H3 to H19
Measurement displayed and accuracy	Voltage, Current & Frequency: ±1 %
	Energy measurements, Cos Phi, THD(u): ±2 %
	Individual Voltage harmonics (H3 to H19): ±3 %
	Temperature measurement : ±3 °C
Testing standards and conformities	
Standards	IEC 61010-1
	IEC 61000 6-2
	IEC 61000 6-4: level B
	IEC 61326-1
	UL 61010
Conformity and listing	Conformity and listing CE, NRTL, c NRTL, EAC
Mechanical specifications	
Case	Front: Instrument case plastic RAL 7016
	Rear: Metal
Degree of Protection	Front: IP41, (IP54 by using a gasket)
	Rear: IP20
Weight	0.6 kg
Size	144 x 144 x 58 mm (H x W x D)
Panel Cutout	138 x 138 (+0.5) mm, thickness 1 – 3 mm
Panel Mounting	Flush mounting
Storage condition	
Temperature for operation	-20 °C +60 °C
Storage	-40 °C +85 °C
Humidity	0 % - 95 %, without condensation for operation and storage
Maximum pollution degree	2
Maximum altitude	≤ 2000m

Contents

Presentation
Power Factor Correction guideline 3
Low Voltage capacitors 15
Detuned reactors 49
Power Factor controllers 55

TeSys Contactors 64

Appendix 69

TeSys contactors

For switching 3-phase capacitor banks, used for power factor correction

Direct connection without choke inductors

Special contactors LC1 D•K are designed for switching 3-phase, single- or multiple-step capacitor banks. They comply with standards IEC 60070 and 60831, NFC 54-100, VDE 0560, UL and CSA.

User Tip:

User can connect normal power contactor (AC3 duty) to switch the capacitor bank with detuned reactor as detuned reactor acts as a inrush current limiter.

PF511555.eps

LC1 DFK11••

PF511556.eps

LC1 DPK12••

Special contactors

Special contactors **LC1 D•K** are designed for switching 3-phase, single or multiple-step capacitor banks (up to 6 steps). Over 6 steps, it is recommanded to use chokes in order to limit the inrush current and thus improve the lifetime of the installation. The contactors are conform to standards IEC 60070 and 60831, UL and CSA.

Contactor applications

Specification

Contactors fitted with a block of early make poles and damping resistors, limiting the value of the current on closing to 60 In max.
This current limitation increases the life of all the components of the installation, in particular that of the fuses and capacitors.
The patented design of the add-on block (n° 90 119-20) ensures safety and long life of the installation.

Operating conditions

There is no need to use choke inductors for either single or multiple-step capacitor banks. Short-circuit protection must be provided by gI type fuses rated at 1.7…2 In.

Maximum operational power

The power values given in the selection table below are for the following operating conditions:

Prospective peak current at switch-on	LC1 D•K		200 In
Maximum operating rate	LC1 DFK, DGK, DLK, DMK, DPK		240 operating cycles/hour
	LC1 DTK, DWK		100 operating cycles/hour
Electrical durability at nominal load	All contactor ratings	400 V	100 000 operating cycles
		690 V	100 000 operating cycles

Operational power at 50/60 Hz (1) θ ≤ 55 °C (2)			Instantaneous auxiliary contacts		Tightening torque on cable end	Basic reference, to be completed by adding the voltage code (3)	Weight
220 V 240 V	400 V 440 V	660 V 690 V					
kvar	kvar	kvar	N/O	N/C	N.m		kg
6.7	12.5	18	1	2	1.7	**LC1 DFK••**	0.430
8.5	16.7	24	1	2	1.7	**LC1 DGK••**	0.450
10	20	30	1	2	2.5	**LC1 DLK••**	0.600
15	25	36	1	2	2.5	**LC1 DMK••**	0.630
20	33.3	48	1	2	5	**LC1 DPK••**	1.300
25	40	58	1	2	5	**LC1 DTK••**	1.300
40	60	92	1	2	9	**LC1 DWK12••**	1.650

Switching of multiple-step capacitor banks (with equal or different power ratings)

The correct contactor for each step is selected from the above table, according to the power rating of the step to be switched.
Example: 50 kvar 3-step capacitor bank. Temperature: 50 °C and U = 400 V or 440 V.
One 25 kvar step: contactor LC1 DMK, one 15 kvar step: contactor LC1 DGK, and one 10 kvar step: contactor LC1 DFK.

(1) Operational power of the contactor according to the scheme on the page opposite.
(2) The average temperature over a 24-hour period, in accordance with standards IEC 60070 and 60831 is 45 °C.
(3) Standard control circuit voltages (the delivery time is variable, please consult your Regional Sales Office):

Volts	24	48	120	220	230	240	380	400	415	440
50/60 Hz	B7	E7	G7	M7	P7	U7	Q7	V7	N7	R7

TeSys contactors
For switching 3-phase capacitor banks, used for power factor correction

Dimensions

LC1 DFK, DGK

DB402404R.eps

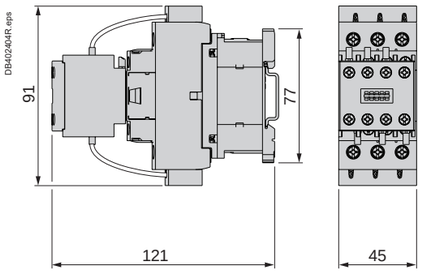

LC1 DLK, DMK

DB402405R.eps

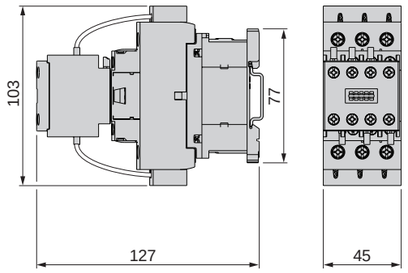

LC1 DPK, DTK

DB402406.eps

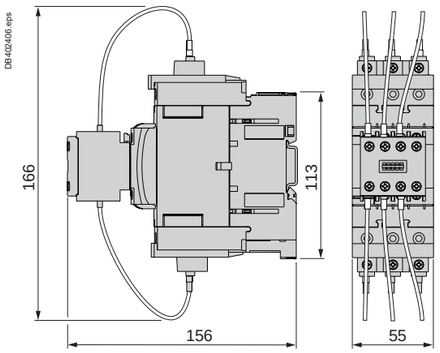

LC1 DWK

DB402407.eps

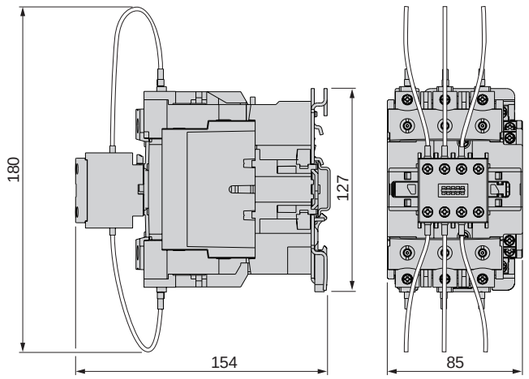

Schemes

LC1 D•K

DB402403.eps

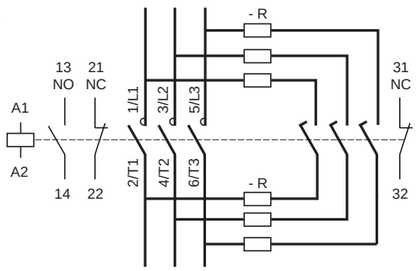

R = Pre-wired resistor connections.

TeSys contactors[1]

For switching 3-phase capacitor banks used for power factor correction

Standard contactors

Capacitors, together with the circuits to which they are connected, form oscillatory circuits which can, at the moment of switch-on, give rise to high transient currents (> 180 In) at high frequencies (1 to 15 kHz).
As a general rule, the peak current on energisation is lower when:
- b the mains inductances are high
- b the line transformer ratings are low
- b the transformer short-circuit voltage is high
- b the ratio between the sum of the ratings of the capacitors already switched into the circuit and that of the capacitor to be switched in is small (for multiple step capacitor banks).

In accordance with standards IEC 60070, NF C 54-100, VDE 0560, the switching contactor must be able to withstand a continuous current of 1.43 times the rated current of the capacitor bank step being switched.
The rated operational powers given in the tables below take this overload into account.
Short-circuit protection is normally provided by gI type HPC fuses rated at 1.7 to 2 In.

LC1D25B0.JPG

Contactor applications

Operating conditions

Capacitors are directly switched. **The values of peak current at switch-on must not exceed the values indicated opposite.**
An inductor may be inserted in each of the three phases supplying the capacitors to reduce the peak current, if necessary.
Inductance values are determined according to the selected operating temperature.

Power factor correction by a single-step capacitor bank

The use of a choke inductor is unnecessary: the inductance of the mains supply is adequate to limit the peak to a value compatible with the contactor characteristics.

Power factor correction by a multiple-step capacitor bank

Select a special contactor as defined on page B8/21.
If a standard contactor is used, it is essential to insert a choke inductor in each of the three phases of each step.

Maximum operational power of contactors

Standard contactors

Maximum operating rate: 120 operating cycles/hour.
Electrical durability at maxiumum load: 100 000 operating cycles.
With choke inductors connected, where necessary.

Operational power at 50/60 Hz						Max. peak current	Contactor rating [1]
θ y 40 °C [2]			θ y 55 °C [2]				
220/240 V	400/440 V	600/690 V	220/240 V	400/440 V	600/690 V		
kvar	kvar	kvar	kvar	kvar	kvar	A	
6	11	15	6	11	15	560	**LC1D09, D12**
9	15	20	9	15	20	850	**LC1D18**
11	20	25	11	20	25	1600	**LC1D25**
14	25	30	14	25	30	1900	**LC1D32, D38**
17	30	37	17	30	37	2160	**LC1D40**
22	40	50	22	40	50	2160	**LC1D50**
22	40	50	22	40	50	3040	**LC1D65**
35	60	75	35	60	75	3040	**LC1D80, D95**
50	90	125	38	75	80	3100	**LC1D115**
60	110	135	40	85	90	3300	**LC1D150**
70	125	160	50	100	100	3500	**LC1F185**
80	140	190	60	110	110	4000	**LC1F225**
90	160	225	75	125	125	5000	**LC1F265**
100	190	275	85	140	165	6500	**LC1F330**
125	220	300	100	160	200	8000	**LC1F400**
180	300	400	125	220	300	10 000	**LC1F500**
250	400	600	190	350	500	12 000	**LC1F630**
250	400	600	190	350	500	14 200	**LC1F800**
200	350	500	180	350	500	25 000	**LC1BL**
300	550	650	250	500	600	25 000	**LC1BM**
500	850	950	400	750	750	25 000	**LC1BP**
600	1100	1300	500	1000	1000	25 000	**LC1BR**

(1) TeSys D Green contactors have not been validated for switching the primaries of 3-phase LV/LV transformers.

(2) Upper limit of temperature category conforming to IEC 60070.

Contents

Presentation
Power Factor Correction guideline 3
Low Voltage capacitors 15
Detuned reactors 49
Power Factor controllers 55
Contactors 63

Influence of harmonics in electrical installations 70

Safety features 71

Protection Devices in APFC Panel 72

Find more about Power Quality Solutions 73

Glossary 74

Relevant documents 74

Influence of harmonics in electrical installations

Since the harmonics are caused by non-linear loads, an indicator for the magnitude of harmonics is the ratio of the total power of non-linear loads to the power supply transformer rating.

This ratio is denoted N_{LL}, and is also known as G_h/S_n:
N_{LL} = Total power of non-linear loads (G_h)/ Installed transformer rating (S_n)

Example:
> Power supply transformer rating: S_n = 630 kVA
> Total power of non-linear loads: G_h = 150 kVA
> N_{LL} = (150/630) x 100 = 24 %.

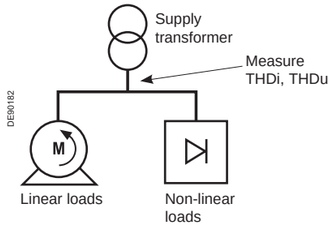

Definition of harmonics

The presence of harmonics in electrical systems means that current and voltage are distorted and deviate from sinusoidal waveforms. Harmonic currents are currents circulating in the networks and whose frequency is an integer multiple of the supply frequency. Harmonic currents are caused by non-linear loads connected to the distribution system. A load is said to be non-linear when the current it draws does not have the same waveform as the supply voltage. The flow of harmonic currents through system impedances in turn creates voltage harmonics, which distort the supply voltage.
The most common non-linear loads generating harmonic currents use power electronics, such as variable speed drives, rectifiers, inverters, etc. Loads such as saturable reactors, welding equipment, and arc furnaces also generate harmonics. Other loads such as inductors, resistors and capacitors are linear loads and do not generate harmonics.

Effects of harmonics

Capacitors are particularly sensitive to harmonic currents since their impedance decreases proportionally to the order of the existing harmonics. This can result in capacitor overload, constantly shortening its operating life. In some extreme situations, resonance can occur, resulting in an amplification of harmonic currents and a very high voltage distortion.
To ensure good and proper operation of the electrical installation, the harmonic level must be taken into account in selecting power factor correction equipment. A significant parameter is the cumulated power of the non-linear loads generating harmonic currents.

Taking account of harmonics

The percentage of non-linear loads N_{LL} is a first indicator for the magnitude of harmonics. The proposed selection of capacitors depending on the value of N_{LL} is given in the diagram below.

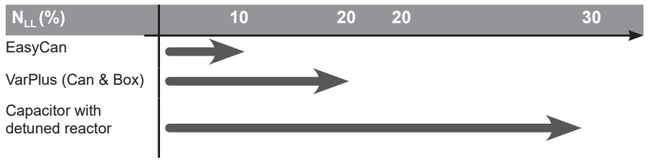

A more detailed estimation of the magnitude of harmonics can be made with measurements. Significant indicators are current harmonic distortion THDi and voltage harmonic distortion THDu, measured at the transformer secondary, with no capacitors connected. According to the measured distortion, different technologies of capacitors shall be selected:

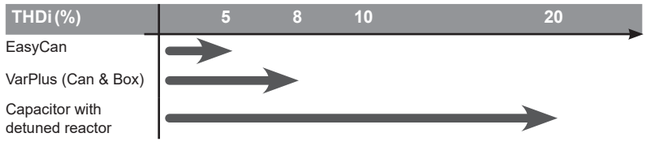

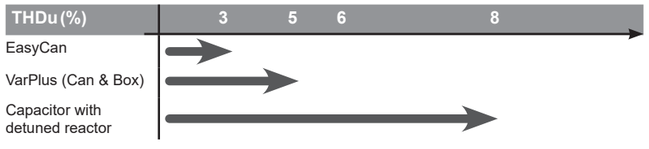

The capacitor technology has to be selected according to the most restrictive measurement.
Example, a measurement is giving the following results :
- THDi = 15 % Harmonic solution.
- THDu = 3.5 % VarPlus solution.
Harmonic solution has to be selected.

Safety features

Figure 1 - (a) Metal layer - (b) Polypropylene film.

Figure 2

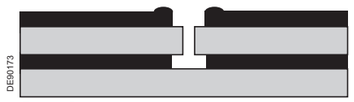

Figure 3

Self-healing is a process by which the capacitor restores itself in the event of a fault in the dielectric which can happen during high overloads, voltage transients etc.

When insulation breaks down, a short duration arc is formed (**figure 1**).

The intense heat generated by this arc causes the metallization in the vicinity of the arc to vaporise (**figure 2**).

Simultaneously it re-insulates the electrodes and maintains the operation and integrity of the capacitor (**figure 3**).

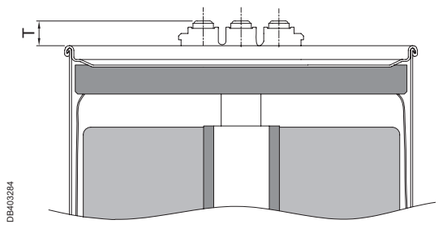

Pressure Sensitive Disconnector (also called 'tear-off fuse'): this is provided in each phase of the capacitor and enables safe disconnection and electrical isolation at the end of the life of the capacitor.

Malfunction will cause rising pressure inside the can. Pressure can only lead to vertical expansion by bending lid outwards. Connecting wires break at intended spots. Capacitor is disconnected irreversibly.

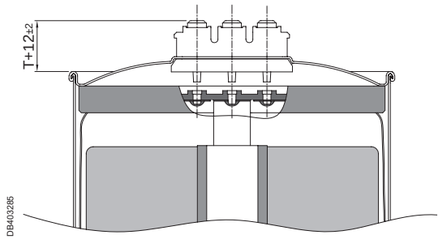

Cross-section view of a three-phase capacitor after Pressure Sensitive Device operated: bended lid and disconnected wires.

Protection Devices in APFC Panel

Over voltage
In the event of an over voltage, electrical stress on the capacitor dielectric and the current drawn by the capacitors will increase. The APFC equipment must be switched off in the event of over voltage with suitable over voltage relay.

Over Current
Over current condition is harmful to all current carrying components. The capacitor bank components must be rated based on the maximum current capacity. A suitable over current relay with an alarm function must be used for over current protection.

Short circuit protection
Short circuit protection at the incomer of the capacitor bank must be provided by devices such as MCCB's and ACB's.
It is recommended to use MCB or MCCB for short circuit protection at every step.

Thermal Overload
A thermal overload relay must be used for over load protection and must be set at 1.3 times the rated current of capacitors (as per IEC 60831).
In case of de tuned capacitor banks, the over load setting is determined by the maximum over load capacity of the de tuning reactor. (1.12 = 4.2(14%), 1.19 = 3.8(7%), 1.3 = 2.7(5.7%)).
If MCCB's are not present, it is recommended to use a thermal overload relay with the stage contactor to make sure the stage current does not exceed its rated capacity.

Over Temperature protection
The APFC controller must be tripped with the help of thermostats in cases the internal ambient temperature of the capacitor bank exceeds the temperature withstand characteristics of the capacitor bank components. Reactors are provided with thermal switches and can be isolated in the case of over temperature conditions.

Find more about Power Quality Solutions

We deliver smart & cost-effective Power quality solutions to improve our customers' efficiency

Powerlogic™

Low Voltage Capacitor Banks
Energy efficiency, as simple as Powerlogic™ PFC Capacitor Bank

Find out more visit
www.schneider-electric.com
and download
PFCED310004EN

AccuSine PCS+

Harmonic Filtering and Reactive Power Compensations
The Schneider Electric solution for active harmonic filtering in industrial and building installations

Find out more visit
www.schneider-electric.com
and download
AMTED109015EN

Glossary

Active current (Ia):
In the vector representation, component of the current vector which is co-linear with the voltage vector.

Active power:
Real power transmitted to loads such as motors, lamps, heaters, computers, and transformed into mechanical power, heat or light.

Apparent power:
In a circuit where the applied r.m.s. voltage is Vrms and the circulating r.m.s. current is Irms, the apparent power S (kVA) is the product: V_{rms} x I_{rms}. The apparent power is the basis for electrical equipment rating.

Detuned reactor:
Reactor associated to a capacitor for Power Factor Correction in systems with significant non-linear loads, generating harmonics. Capacitor and reactor are configured in a series resonant circuit, tuned so that the series resonant frequency is below the lowest harmonic frequency present in the system.

Displacement Power Factor:
For sinusoidal voltage and current with a phase angle φ, the Power Factor is equal to $\cos\varphi$, called Displacement Power Factor (DPF)

Harmonic distortion:
Indicator of the current or voltage distortion, compared to a sinusoidal waveform.

Harmonics:
The presence of harmonics in electrical systems means that current and voltage are distorted and deviate from sinusoidal waveforms. Harmonic currents and voltages are signals circulating in the networks and which frequency is an integer multiple of the supply frequency.

IEC 60831-1:
"Shunt power capacitors of the self-healing type for a.c. systems having a rated voltage up to and including 1 000 V – Part 1: General – Performance, testing and rating – Safety requirements – Guide for installation and operation".

In-rush current:
High-intensity current circulating in one piece of equipment after connection to the supply network.

kVA demand:
Maximum apparent power to be delivered by the Utility, which determines the rating of the supply network and the tariff of subscription.

Polypropylene:
Plastic dielectric material used for the construction of low-voltage capacitors.

Power Factor:
The power factor λ is the ratio of the active power P (kW) to the apparent power S (kVA) for a given circuit.
λ = P (kW) / S (kVA).

Power Factor Correction:
Improvement of the Power Factor, by compensation of reactive energy or harmonic mitigation (reduction of the apparent power S, for a given active power P).
Rated current:
Current absorbed by one piece of equipment when supplied at the rated voltage.

Rated voltage:
Operating voltage for which a piece of equipment has been designed, and which can be applied continuously.

Reactive current (Ir):
Component of the current vector which is in quadrature with the voltage vector.

Reactive power:
Product of the reactive current times the voltage.

Service voltage:
Value of the supply network voltage, declared by the Utility

Service current:
Amplitude of the steady-state current absorbed by one piece of equipment, when supplied by the Service Voltage.

Usual formulas:
Apparent power: S = V_{rms} x I_{rms} (kVA).
Active power: P = V_{rms} x Ia = V_{rms} x I_{rms} x $\cos\varphi$ (kW).
Reactive power: Q = V_{rms} x Ir = V_{rms} x I_{rms} x $\sin\varphi$ (kvar).

Voltage sag:
Temporary reduction of the supply voltage magnitude, between 90 and 1 % of the service voltage, with a duration between ½ period and

Relevant documents

Relevant documents published by Schneider Electric

- Electrical Installation Guide.
- Expert Guide n°4: "Harmonic detection & filtering".
- Expert Guide n°6: "Power Factor Correction and Harmonic Filtering Guide"
- Technical Guide 152: "Harmonic disturbances in networks, and their treatment".
- White paper: controlling the impact of Power Factor and Harmonics on Energy Efficiency.

Relevant websites

- http://www.schneider-electric.com
- https://www.solution-toolbox.schneider-electric.com/segment-solutions
- http://engineering.electrical-equipment.org/
- http://www.electrical-installation.org

Relevant standards

- IEC 60831 - Shunt power capacitors of the self healing for a.c. systems up to 1000V
- IEC 61642 - Application of filters and shunt capacitors for industrial a.c. networks affected by harmonics
- IEC 61921 - Power capacitors-low voltage power factor correction capacitor banks

VarSelect

Automatic Power Factor Correction
Bank Design Guide

Experience the power of digitization with VarSelect to build a simple and efficient PFC Bank

Experience our VarSelect with

- Online tool for “One shop stop” of components to build PFC Bank
- Easy sign up process for users where you can create, save, retrieve, reuse and rework the project
- Complete Bill of materials for Electrical components to build PFC Banks with Single Line diagram
- Design optimization to save time, space and cost
- Flexibility in selecting range, voltage etc to cover the global market

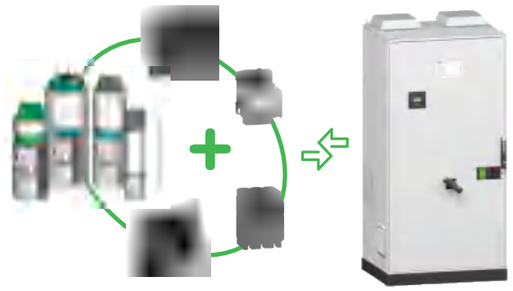

Discover more about VarSelect….

Check your PFC Bank Design Guide!

https://varselect.se.com

Life Is On | Schneider Electric

se.com

Schneider Electric Industries SAS
35, rue Joseph Monier
CS 30323
92506 Rueil Malmaison Cedex
France

RCS Nanterre 954 503 439
Capital social 896 313 776 €
www.schneider-electric.com

11-2021
PFCED310003EN

As standards, specifications and designs change from time to time, please ask for confirmation of the information given in this publication.

This document has been printed on ecological paper

Design: Schneider Electric
Photos: Schneider Electric
Edition: Altavia Connexion - made in France

PEFC
PEFC/10-31-1247

ART.xxxxxx © 2021 - Schneider Electric - All rights reserved.