IZM6 Series Air Circuit Breakers

Superior Solutions

To Meet and Exceed The Unique and Wide-ranging Requirements

Powering Business Worldwide

Energizing a world that demands more.

We deliver:

- **Electrical solutions** that use less energy, improve power reliability and make the places we live and work safer and more comfortable
- **Hydraulic and electrical solutions** that enable machines to deliver more productivity without wasting power
- **Aerospace solutions** that make aircraft lighter, safer and less costly to operate, and help airports operate more efficiently
- **Vehicle drivetrain and powertrain solutions** that deliver more power to cars, trucks and buses, while reducing fuel consumption and emissions

Discover today's Eaton.

EATON

Powering Business Worldwide

IZM6 Series Air Circuit Breakers

System Overview
Model Description 4
External Structure 5
System Structure 7
Technical Overview
Circuit Breaker Technical Data 8
Technical Data of Trip Units 9
Trip Unit Functions 10
Ordering Description
Devices Supplied as Standard 20
Devices Manually Operated 39
Accessories 58
Characteristics and Parameters
Tripping Characteristics 74
Power Loss, Derating Factor and Copper Bar Specification 87
Electrical Diagrams 88
Outline and Mounting Dimensions
IZM61 Withdrawable Circuit Breaker Dimensions 89
IZM61 Fixed Circuit Breaker Dimensions 90
IZM65 Withdrawable Circuit Breaker Dimensions 91
IZM65 Fixed Circuit Breaker Dimensions 92
IZM67 Withdrawable Circuit Breaker Dimensions 93
IZM67 Fixed Circuit Breaker Dimensions 97
Minimum Clearances 105
Model Selection Guide
Complete Model Selection Guide for IZM6 Series Air Circuit Breaker 106

IZM6 Series Air Circuit Breakers

Product description

The IZM6 series air circuit breakers are a new generation of high-performance air circuit breakers with sophisticated technology and comprehensive functions, offering safety and reliability.

The circuit breakers are suitable for use in electrical distribution networks with AC 50Hz/60Hz, rated operating voltage up to 690V, and rated operating current of 4000A and below, to provide functions such as measurement, diagnosis, analysis and communication, precise selective protection and power monitoring.

The Circuit Breaker Complies With Below Standards:

IEC 60947-1 and GB14048.1	Low-voltage switchgear and controlgear	Part 1: General
IEC 60947-2 and GB14048.2	Low-voltage switchgear and controlgear	Part 2: Circuit breaker
IEC 60947-4-1 and GB14048.4	Low-voltage switchgear and controlgear	Part 4-1: Contactors and motor-starters. Electro-mechanical contactors and motor-starters (Including motor protector)
GB/T 14597	Climatic environmental conditions at different altitudes for electrical products	
GB/T 2421.1	Environmental testing of electrical and electronic products:	Overview and guidelines
GB/T 20626.1	Plateau electrical and electronic products for special environmental conditions	Part 1: General technical requirements
GB/T 2423.1	Environmental testing of electrical and electronic products	Part 2: Test method - Test A: Low temperature
GB/T 2423.2	Environmental testing of electrical and electronic products	Part 2: Test method - Test B: High temperature
GB/T 2423.4	Environmental testing of electrical and electronic products	Part 2: Test method - Test Db: Alternating damp heat test method
GB/T 2423. 17	Environmental testing of electrical and electronic products	Part 2: Test method - Test Ka: Salt mist
GB/T 2423.18-2000	Environmental testing of electrical and electronic products	Part 2: Test method - Test Kb: Salt mist, alternating (sodium chloride solution)

IZM6 Series Air Circuit Breakers

Model Description

Catalogue Number of IZM6 Series Air Circuit Breakers (Standard Configuration)

IZM 65 B 3C - A 06 WH M

Product Type
IZM = IZM series air circuit breaker

Frame size
61 = 200-1600A
65 = 400-2500A
67 = 2000-4000A

Switching capacity
B = 55kA
N = 66kA
S = 85kA

Poles
3C = 3-pole
4C = 4-pole

Intelligent trip unit
Blank = Without over-current protective circuit breaker
D = PT10, LSI, current type, rotary switch
DG = PT10, LSIG, current type, rotary switch
A = PT20, LSI, current type, LCD
AG = PT20, LSIG, current type, LCD
AC = PT20, LSIC, current type, LCD
AGC = PT20, LSIGC, current type, LCD
P = PT25, LSIC, power type, LCD
PG = PT25, LSIGC, power type, LCD

Rated Current
02 = 200A
04 = 400A
06 = 630A
08 = 800A
10 = 1000A
12 = 1250A
16 = 1600A
20 = 2000A
25 = 2500A
32 = 3200A
40 = 4000A

Mounting/Wiring form
WH = Drawout type, horizontal wiring
FH = Fixed type, horizontal wiring
WV = Drawout type, vertical wiring [1)]
FV = Fixed type, vertical wiring [1)]

Configuration
Blank = Electrically operated
M = Manually operated

220Vac Electrically Operated

Fixed type:

a Fixed circuit breaker's basic device, including 4CO auxiliary contacts
b Wiring terminal
c PT series intelligent trip unit
d Over-current trip switch (OTS) (1CO)
e Door escutcheon
f Charging motor (220V AC) [2)]
g Shunt trip (220V AC) [2)]
h Closing spring release (220V AC) [2)]
i 220VAC/DC to DC24V power module, for trip unit display [3)]

Withdrawable type:

a Withdrawable circuit breaker's basic device, including 4CO
b Cassette
c Safety shutter
d Wiring terminal
e PT series intelligent trip unit
f Over-current trip switch (OTS) (1CO)
g Door escutcheon
h Charging motor (220V AC) [2)]
i Shunt trip (220V AC) [2)]
j Closing spring release (220V AC) [2)]
k 220VAC/DC to DC24V power module, for trip unit display [3)]

Notes: [1)] For IZM67 only
[2)] Not included in the simple configuration of manually operated devices
[3)] The circuit breaker is equipped with a power module as standard
For power module input voltage details, refer to IZM6 operating manual

Fixed Type

Withdrawable Type

1. Secondary terminal wiring nameplate
2. Fault trip indication/reset button
3. Intelligent trip unit
4. Open button
5. Closed button
6. Manual charging handle
7. "Released" and "Charging" indication
8. Open/Closed indication
9. Data nameplate
10. Support
11. Cassette
12. Power module
13. Lever storage position
14. Three-cell switch
15. Lever drive position
16. Unlock button
17. Disconnected position locking device

IZM6 Series Air Circuit Breakers
External Structure

IZM61 Cassette – Rear View

IZM65 Cassette – Rear View

IZM67 Cassette – Rear View

IZM6 System Structure

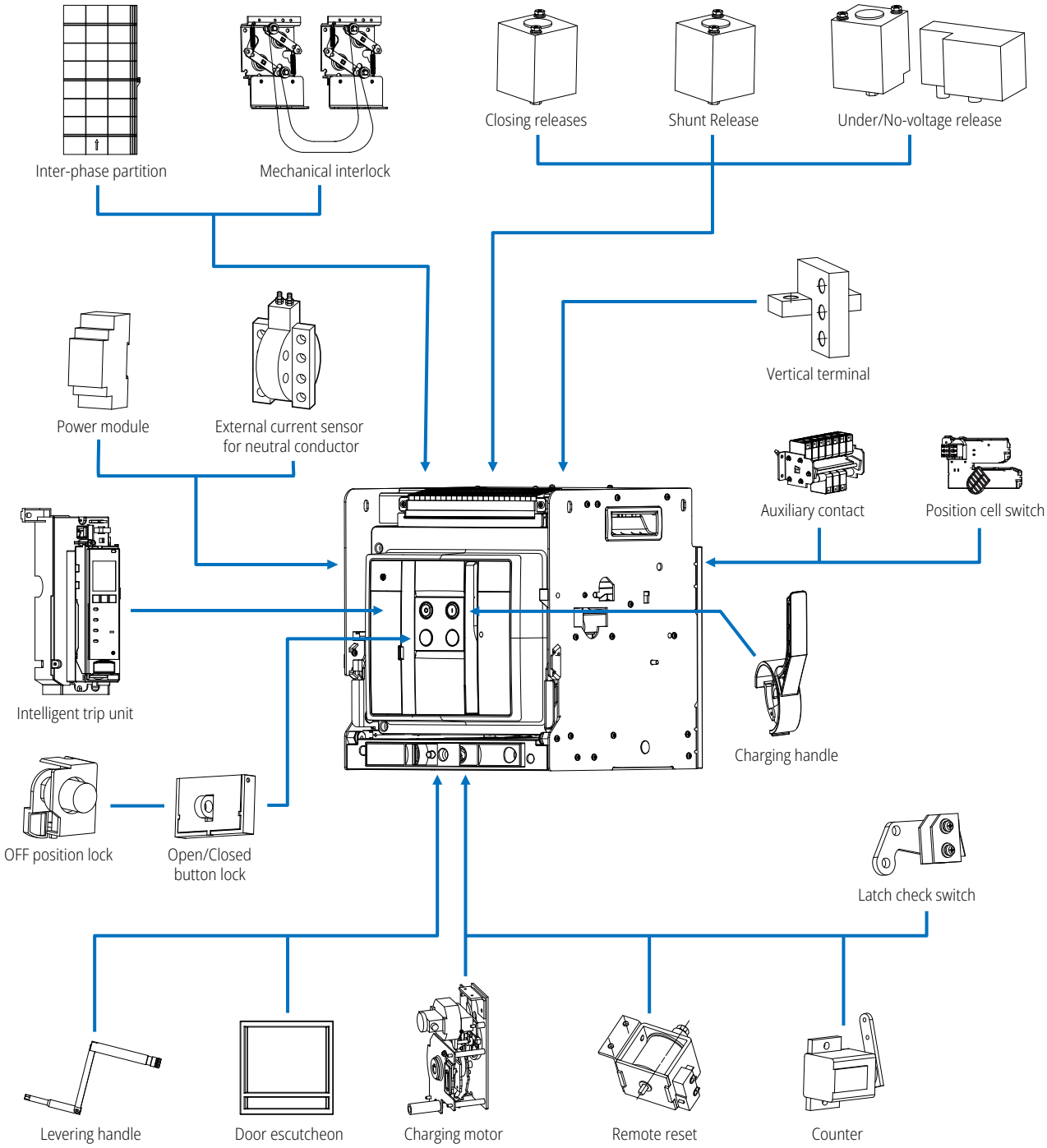

IZM6 Series Air Circuit Breakers

Circuit Breaker Technical Data

Technical Data of Circuit Breakers

			IZM61-1600 [2]	IZM65-2500 [2]		IZM67-4000 [2]		
Standard			IEC/EN 60947	IEC/EN 60947		IEC/EN 60947		
Certificate			CCC.CB	CCC.CB		CCC.CB		
RoHS			RoHS	RoHS		RoHS		
Rated peak withstand voltage (U_{imp})			12kV	12kV		12kV		
Rated insulation voltage (U_i)			1000V	1250V		1250V		
Rated voltage (U_e)			440, 690V	440, 690V		440, 690V		
Ambient temperature	Storage		-40°C~+85°C	-40°C~+85°C		-40°C~+85°C		
	Operation		-25°C~+70°C	-25°C~+70°C		-25°C~+70°C		
Frequency			50/60Hz	50/60Hz		50/60Hz		
Application category			B	B		B		
Protection type			IP20	IP20		IP20		
Over-voltage category			IV (main circuit)	IV (main circuit)		IV (main circuit)		
Pollution degree			III	III		III		
Direction of incoming supply			Upper or lower incoming as required (no derating for upper/lower wiring)					
Frame current			1600A	2500A		4000A		
Rated current (I_n)			200A, 400A, 630A, 800A, 1000A, 1250A, 1600A	400A, 630A, 800A, 1000A, 1250A, 1600A, 2000A, 2500A		2000A, 2500A, 3200A, 4000A		
Circuit breaker model			N	B	N	B	N	S
Rated ultimate short circuit breaking capacity (I_{cu}, kA)		440V	66	55	66	55	66	85
		690V	42	55	66	55	66	85
Rated operational short circuit breaking apacity (I_{cs}, kA)		440V	50	55	66	55	66	85
		690V	42	55	66	55	66	85
Rated short time withstand current (I_{cw}, kA)		1s	50 [1]	55	66	55	66	85
		3s	25	32	50	32	50	75
Rated short circuit making capacity (I_{cm}, kA)		440V	145	121	145	121	145	187
		690V	88	121	145	121	145	187
Open/Close delays (ms)	Opening delay		25	25		25		
	Closing delay		60	60		60		
Durability and mounting								
Lifespan	Mechanical, w/o maintenance		10000	10000		10000		
	Mechanical, w/ maintenance		20000	20000		20000		
	Electrical, w/o maintenance		8000	8000		6500		
aximum operating frequency (Operations/h)			60	60		60		
Dimensions (H x W x D, mm)	Fixed type, 3-pole		335 x 266 x 199	390 x 422 x 290		390 x 422 x 290		
	Fixed type, 4-pole		335 x 336 x 199	390 x 537 x 290		390 x 537 x 290		
	Withdrawable type, 3-pole		357 x 254 x 300	430 x 407 x 395		430 x 407 x 395		
	Withdrawable type, 4-pole		357 x 324 x 300	430 x 522 x 395		430 x 522 x 395		
Weight (kg)	Fixed type, 3-pole / 4-pole		30Kg (3P) / 38Kg (4P)	75Kg (3P) / 85Kg (4P)		85Kg (3P) / 95Kg (4P)		
	Withdrawable type, 3-pole / 4-pole		50Kg (3P) / 58Kg (4P)	100Kg (3P) / 110Kg (4P)		126Kg (3P) / 136Kg (4P)		

Notes: [1] Icw (1s) 50kA is applied to 440V.

[2] The IZM61/65/67 provides an isolated circuit breaker. The PT series electrical trip unit is removed from the IZM61/65/67 circuit breaker in accordance with the requirements of Annex L of GB/T14048.2-2020/IEC 60947-2, and the remaining configurations are consistent with standard circuit breakers. The isolated IZM61/65/67 circuit breaker is used in conjunction with an external protection relay (maximum delay of 400ms) to achieve a breaking capacity (at maximum rated operating voltage Ue) to the rated short time withstand current Icw (1 second).

Technical Data of Trip Units

	PT10	**PT20**	**PT25**
Protection functions	LSI; LSIG (optional)	LSI; LSIG (optional)	LSI; LSIG (optional)
Long delay protection (L)			
Long delay setting (I_r), × I_n	0.4, 0.5, 0.6, 0.7, 0.75, 0.8, 0.9, 0.95, 0.98, 1.0	0.4~1.0, adjustment step is 0.01I_n	0.4~1.0, adjustment step is 0.01
Long delay time tr (6 × I_r)	0.5, 1, 2, 4, 7, 10, 12, 15, 20, 24 s	0.5~24s, adjustment step is 0.1s	0.5~24s, adjustment step is 0.1s
Short delay protection (S)			
Short delay setting (I_{sd}), × I_r	1.5, 2, 2.5, 3, 4, 5, 6, 7, 8, 10	1.5x - 10x (I_r) , adjustment step is 0.1I_r	1.5x - 10x (I_r) , adjustment step is 0.1
Short delay time t_{sd} – Fixed time	0.0, 0.1, 0.2, 0.3, 0.4, 0.5 s[1)]	0.05~0.5 s, adjustment step is 0.01s[1)]	0.05~0.5 s[1)]
Short delay time t_{sd} – Inverse time I^2t (at 8×I_r)	0.1, 0.2, 0.3, 0.5 s	0.1~0.5 s, adjustment step is 0.01s	0.1~0.5 s
Instantaneous protection (I)			
Instantaneous protection setting (I_i), × I_n	OFF, 2, 4, 5, 6, 7, 8, 10, 12, 15	OFF, 2~15, adjustment step is 0.1I_n	OFF, 2~15
Ground fault protection (G), optional			
Ground fault alarm setting (A), × I_n	OFF, 0.2, 0.4, 0.6, 1.0	OFF, 0.2~1.0, adjustment step is 0.01I_n	OFF, 0.2~1.0
Ground fault trip setting (I_g), × I_n	OFF, 0.2, 0.4, 0.6, 0.8, 1.0	OFF, 0.2~1.0, adjustment step is 0.01I_n	OFF, 0.2~1.0
Ground fault delay t_g – Fixed time	0.1, 0.2, 0.3, 0.4, 0.5 s	0.1~0.5 s, adjustment step is 0.01s	0.1~0.5 s
Ground fault delay t_g – Inverse time I^2t	0.1, 0.2, 0.3, 0.4, 0.5 s	0.1~0.5 s, adjustment step is 0.01s	0.1~0.5 s
Over temperature trip	●	●	●
Zone selective interlocking (ZSI)	–	–	●
Making current release (MCR)	●	●	●
Trip unit functions			
System diagnosis			
Status / Overload LED display	●	●	●
Trip indicators	●	●	●
Current amplitude at trip point	●	●	●
High load or ground fault alarm contact	●	●	●
System monitor			
LCD display	–	●[2)]	●[2)]
Current metering accuracy	±1.5% of Reading	±1.5% of Reading	±1.5% of Reading
Line voltage metering accuracy	–	–	±0.5% of Reading
Power and energy metering accuracy	–	–	±2.5% of Reading
Apparent power kVA	–	–	●
Reactive power kVAR	–	–	●
Power factor	–	–	●
Communication			
Onboard integration (ModBus)	–	○	●
USB	●	●	●
Power supply	+24 V DC, supplied as standard	+24 V DC, supplied as standard	+24 V DC, supplied as standard
Additional functions			
Trip test	Integral	Integral	Integral
Trip log	●	●	●
Electronic operations counter	●	●	●
Breaker health monitor	●	●	●

Notes: [1)] 0.1s: trip time is 0.07s to 0.1s; 0s: corresponds to 0.05s, clear time is 30ms to 50ms (with external power supply).
[2)] Requires external 24VDC control voltage supply when continuous current below 20% of I_n
● Standard ○ Optional – not available

Trip Unit Functions

Trip unit model		PT10	PT20	PT25
Display interface	LCD and rotary switch	Rotary switch	LCD	LCD
Basic protections	Overload long delay time protection	I^2t	I^2t, I^4t, $I^{0.5}t$, It	I^2t, I^4t, $I^{0.5}t$, It
	Short circuit short time protection	√	√	√
	Short circuit instantaneous protection	√	√	√
	Ground protection	Optional	Optional	Optional
Other protections	Overload thermal memory ①	√	√	√
	Ground thermal memory ①	√	√	√
	Neutral protection (4P) ①	√	√	√
	Current unbalance and phase loss protection	–	√	√
	Making current release (MCR) ②	√	√	√
	High instantaneous protection ②	√	√	√
	Over temperature protection ⑦	√	√	√
	High load alarm	–	√	√
Advanced protections	Over/Under voltage protection	–	–	√
	Voltage unbalance protection	–	–	√
	Phase sequence protection	–	–	√
	Over/Under frequency protection	–	–	√
	Current demand protection	–	√	√
	Power demand protection	–	–	√
	Reverse power protection	–	–	√
	Zone selective interlocking (ZSI) protection	–	–	√
Measurement	Current measurement	√	√	√
	Voltage (phase voltage, line voltage)	–	–	√
	Phase sequence detection	–	–	√
	Frequency measurement	–	–	√
	Power measurement (active power)	–	–	√
	Power factor measurement	–	–	√
	Energy measurement (active energy)	–	–	√
	Current demand measurement	–	√	√
	Power demand measurement	–	–	√
Maintenance	LED fault status indication	√	√	√
	Fault record (10) and query ①	√	√	√
	Historical peak current record ①	√	√	√
	Alarm history record query ①	√	√	√
	Fault record ⑥	√	√	√
	Fault trip signal output (relay) ③	–	–	√
	Self-diagnostic function	√	√	√
	Trip test ①③	√	√	√
	Simulated current test ④	√	√	√
	Breaker health diagnosis ①	√	√	√
	Number of operations query ⑤	√	√	√
	Clock function ①	√	√	√
Others	Programmable relay (3 sets)	–	–	√
	Programmable digital input (2 sets of 220VAC)	–	–	√
	Communication (Modbus–RTU) ⑧	–	Optional	√
	USB	√	√	√

Notes: "√" =The function is available; "–" = the function is not available. The following notes are only available to PT series trip units.

① This function can be viewed and operated via the PTM software on PT10, and via the PTM software or display buttons on PT20/25.

② This function is set by the factory before delivery from the factory, and reacts to the peak current.

③ This function requires an auxiliary power supply to be connected to.

④ The simulated current test function is achieved via the PTM software. If the test requires tripping verification, an auxiliary power supply is required.

⑤ This function is achieved via the PTM software.

⑥ This function is achieved via the PTM software. Current and voltage waveforms of each phase before and after a fault occurs will be recorded (PT25 only).

⑦ Trip integrated internal temperature monitoring, for over temperature alarm when the trip unit's temperature exceeds 80°C, and over temperature tripping when the temperature exceeds 85°C.

⑧ Built-in.

PT Electronic Trip Unit

The new-generation IZM6 air circuit breaker is equipped with new PT electronic trip unit for protection and metering. The PT electronic trip unit offers a complete range of models, flexible for use and selection according to actual protection needs.

PT Unit Function

Trip unit model	Catalog No.	Protection style	LCD	Rotary switch	Ground fault	Modbus RTU	ZSI	Relay output	Digital input
PT 10	PT10	LSI		•					
	PT10G	LSIG		•	•				
PT 20	PT20	LSI	•						
	PT20G	LSIG	•		•				
	PT20C	LSI	•			•			
	PT20GC	LSIG	•		•	•			
PT 25	PT25	LSI	•			•	•	•	•
	PT25G	LSIG	•		•	•	•	•	•

Multiple Options

- The PT units are available in LSI and LSIG types, suitable for all power distribution systems.
- The PT10 units provide systems with electronic trip units for standard protection, ensuring high reliability and trip accuracy. Overload, selective short circuit, short circuit and ground faults can be prevented.
- The PT20/25 units offer more advanced protection and system management functions, while supporting customized requirements.

Connectivity

- All PT units are equipped with a USB port, which can be connected to the PTM software to configure, test, and monitor different protections.
- An optional built-in Modbus communication port is available for PT20/25 units. Through Modbus, circuit breaker status (Closed/Tripped/Opened), settings and operation information can be obtained.

Password security

The cybersecurity of your system is critical. The PT electronic trip unit settings are password protected to reduce the risks of unauthorized changes. Correct password (0000 by factory default) must be entered in the “EDIT SETTINGs” menu to change non-rotary settings. When the change takes longer than 10 seconds, the authorization will time out. When wrong password is entered three times, there will be a ten-minute lockout period, during which access will be prohibited.

There are two levels of password: “Administrator” and “User”. The factory default is the administrator level, and the password is "0000". The administrator can create a user and decide on the permissions of that user.

The factory default settings for the trip unit are as follows if without special requirements from users.

Over load long delay protection		I_r	I_n
		t_r	4s
Short circuit short delay protection		I_{sd} (flat)	$3I_r$
		t_{sd} (flat)	0.1s (flat)
Short circuit instantaneous protection		I_i	5 I_n
Ground fault protection		I_g	0.8 I_n
		t_g	0.5s (flat)
Current unbalance protection		OFF	
Neutral protection		100% I_r	
Voltage unbalance protection		OFF	
Under voltage protection		OFF	
Over voltage protection		OFF	
Demand protection		OFF	
Phase sequence protection		OFF	
Frequency protection		OFF	
Making current release (MCR) peak	IZM61 1600A frame	36kA	
	IZM65 2500A frame	56kA	
	IZM67 4000A frame	90kA	

Interface Functions of the Trip Unit

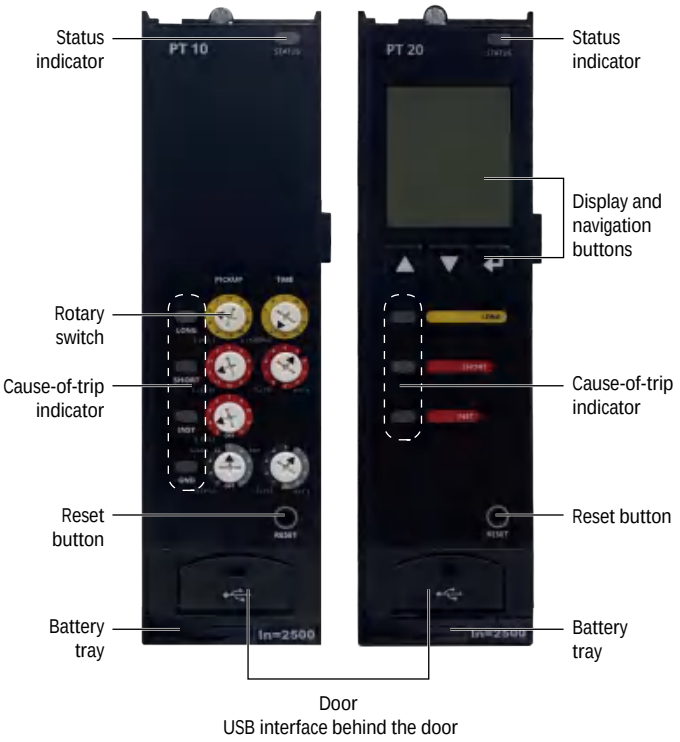

Status Indicator

- All PT trip units have an indicator at the top right labeled "STATUS". The indicator offers below four statuses:
- The indicator
- blinks green (on and off once each second), indicating that the trip unit is operating normally.
- The indicator blinks orange (on and off once each second), indicating that one or several faults shown below is detected:
  - Battery low or not connected
  - Auxiliary power supply voltage low
  - Over load
  - Thermal memory alarm
  - Over temperature alarm
  - Clock error
- The indicator blinks red quickly, indicating that that one or several faults shown below is detected, which requires immediate action to rectify the problem and/or replace the trip unit.
  - Trip actuator release damaged
  - Firmware error
  - Calibration error
  - Mechanism error
- The indicator remains off, indicating that there is no auxiliary power supply applied or insufficient primary current to power the trip unit. This does not indicate a malfunction. The status indicator will resume blinking when auxiliary power is supplied or breaker load increases.

Cause-of-Trip Indicator

- There are four pickup/cause-of-trip indicators on the face of the trip unit label "LONG", "SHORT", "INST" and "GND". After a trip event, the indicator blinks (one second on, three seconds off) and the cause will be shown on the display if an auxiliary power is applied. The indicator and the display can be cleared by pressing the RESET button. Following is a list of conditions if the indicator blinks:
- "LONG" – Blinking indicates a long delay trip or over-temperature trip has occurred.
- "SHORT" – Short delay trip or mechanism error.
- "INST" – Instantaneous trip, Making Current Release (MCR) trip, or high instantaneous trip has occurred
- "GND" – Ground trip or ground alarm condition has occurred.

Rotary Switches

These rotary switches can be used to set up protection values on PT10.

Reset Button

The button labeled "RESET" can be depressed using a small tool. Press this button to clear the blinking cause-of-trip indicator, clear the configurable relay's locking alarm message, and clear the ZSI "check mark" on the display (lit on after a ZSI input signal is detected).

Display and Navigation Buttons

The PT20/25 trip unit has a display on the front. The display provides information such as metered values, events, and the interface to select certain configuration options. The interface is simple and intuitive, enabling operators to have quick and easy access to all information and settings by minimizing installation and commissioning time. Information is presented on the display in either English or simplified Chinese. Back lighting is included with a power saving feature that after 30 seconds of inactivity will turn the backlight off.

There are three navigation buttons below the display. They are used to set directly all the protection functions in a few simple steps.

Battery Tray

At the bottom of the trip unit is a small tray which holds the battery. When the trip unit is not powered, this battery offers power to the cause-of-trip indicator and real-time clock, and assist the trip unit to record events.

A battery icon at the bottom of the display (PT20/25 only) indicates remaining battery life. For rotary type trip unit (PT10), the battery life can be viewed on the computer. The battery plays no part in the protection functions of the trip system. This battery is the standard type CR 2032 coin-cell.

Door and USB port

The door can be opened downward with a screwdriver to expose the micro-B USB port. The USB is a micro-USB connector utilizing USB 2.0 protocol. This USB connection may be used with the Power Trip Protection Manager software to configure and monitor the trip unit.

A USB connection will also typically provide power from the host side of the USB cable to power up the trip unit when the auxiliary power supply is not available. The battery pack available in the market can also provide power to the trip unit. The USB connection is intended for temporary use to configure, monitor or test a trip unit.

Ground Fault Sensing

The PT unit provides for three modes of sensing to detect ground fault currents: Residual, Source Ground, and Zero Sequence. Refer to below ground methods for more description.

The ground sensing mode (Residual or Source/Zero Sequence) is selected using the display and navigation buttons or by using the PTM software.

Neutral protection is provided independent of the Ground Fault function.

Ground fault alarm or trip can be output via programmable relays.

Ground Method Description

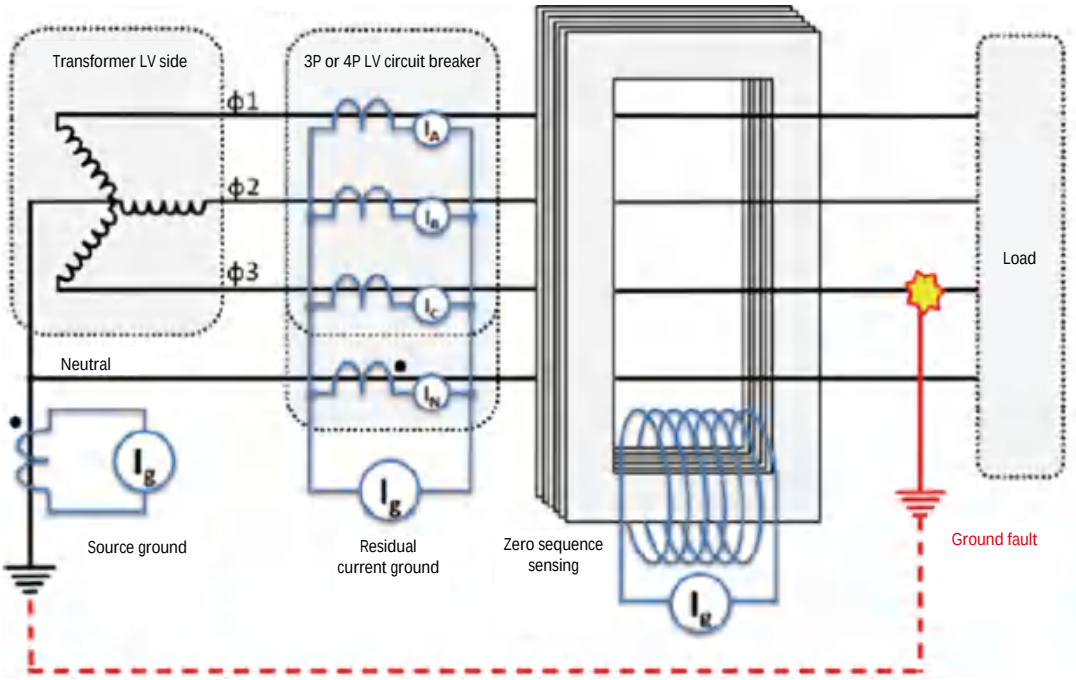

Residual Current Grounding

Residual current sensing is the standard mode of ground fault sensing in Series PT trip units. This mode uses one current sensor on each phase conductor and one on the neutral for a four-wire system. This mode of sensing calculates the sum of vector outputs of the three or four current sensors. If the sum is zero, then no ground fault exists. Residual current ground sensing features are adaptable to main and feeder circuit breaker applications. If an external neutral sensor is used with a reverse feed breaker, the proper polarity of the neutral needs to be considered.

An external current sensor is required when a 3-pole circuit breaker performs residual current grounding sensing.

Source Grounding and Zero Sequence Grounding

The current sensor (4000:1) signal on the ground wire of the source ground receiving device directly measures the total ground current flowing through the ground conductor. When the current measured by the trip unit exceeds the ground fault setting, the circuit breaker will trip or alarm.

The ground return detection method is usually applied when the main circuit breaker is used for a simple one-way power system. This method is also applicable to double-ended systems where a mid-point grounding electrode is employed.

Setting the ground fault type will enable this protection.

Zero Sequence sensing, also referred to as vectorial summation, is applicable to mains, feeders, and special schemes involving zone protection.

The Zero Sequence sensing method uses a single sensor that contains all phase and neutral wires in a four-wire system. If a ground fault occurs, the vector sum of all magnetic fields will not be zero, and the sensor will produce an output signal equivalent to the current flowing to ground. When the current measured by the trip unit exceeds the time delay ground fault setting, the circuit breaker trips or alarms.

The sensors used in both sensing methods are iron-core CTs, connected to frame secondary wiring terminals G1 and G2. The sensor ratio must be adapted to the trip unit of 4000:1A.

The starting current for both the return Source ground and Zero Sequence ground are multiples of 400.

Zone Selective Interlocking (ZSI)

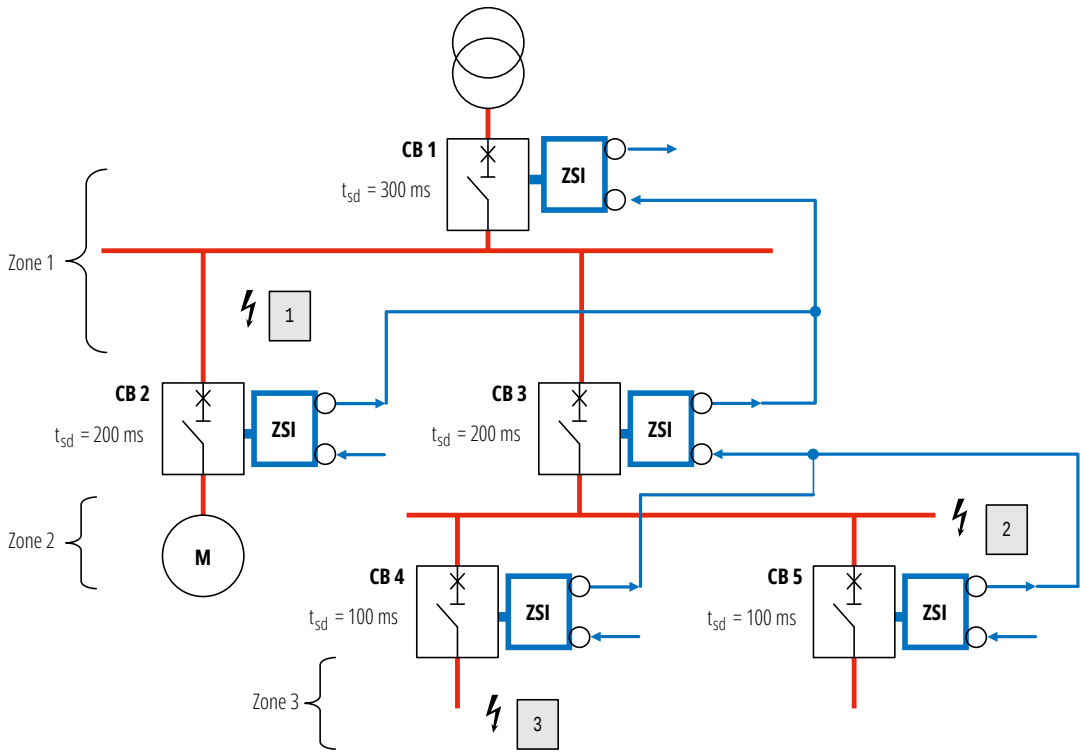

CB = Circuit breaker
ZSI = Zone selective interlocking

Zone Selective Interlocking (ZSI)

- The zone selective interlocking (ZSI) does not require additional function modules to operate. ZSI can be achieved by connecting the circuit breakers through a set of cables. The ZSI function ensures the upstream circuit breaker closest to the fault point to break the current quickly without any delay.
- The ZSI function significantly reduces breaking time to lower impact on the system due to short circuit, compared to conventional power systems that use different delay time to build selectivity.
- When the ZSI is enabled, a fault within the zone of protection will immediately trip the breaker and send a blocking signal to upstream trip units to restrain them from tripping immediately. The blocking signal causes the upstream circuit breakers to follow their set coordination time delays so that the service is interrupted to the isolated fault area only while the fault is cleared in the shortest time possible.

Zone Selective Interlocking (ZSI) Examples

Example A – Short circuit at Position 3

- Circuit Breakers CB1, CB3 and CB4 all see the short circuit current and actuate a short delay pickup.
- Circuit Breaker CB4 sends a ZSI output blocking signal to CB3 ZSI input. CB3 sends a ZSI output blocking signal to CB1 ZSI input. CB1 sends a ZSI output signal that is not wired. This signal could be wired to a medium-voltage relay on the other side of the transformer with a compatible ZSI model.
- CB1 receives the ZSI input signal and starts a timer for 300ms. CB3 receives the ZSI input signal and starts its timer for 200ms. CB4 gets no input from any lower zone circuit breaker. This circuit breaker will then trip immediately without any time delay. CB4 interrupts the fault and CB1 and CB3 stop short delay timing because the fault current is gone.
- If for some reason, CB4 does not open and interrupt the fault, then at the end of its short delay time CB3 will open and interrupt the fault.

Example B – Short circuit at Position 2

- Circuit Breaker CB1 and CB3 see the short circuit current and actuate a short delay pickup. CB4 and CB5 do not see the fault current and do not send a ZSI output.
- Circuit Breaker CB3 sends a ZSI blocking signal to CB1 ZSI input. CB1 sends a ZSI output signal. In this example, that signal is not wired.
- CB1 received the ZSI input signal and starts a timer for 300ms. CB3 gets no input from any lower zone circuit breaker. This breaker will then trip immediately without any time delay. CB3 interrupts the fault and CB1 stops short delay timing because the fault current is gone. With the ZSI function, the clearance time is reduced by approximately 150ms.

Example C – Short circuit at Position 1

- Only Circuit Breaker CB1 sees the short circuit current and actuate a short delay pickup. CB2, CB3, CB4 and CB5 do not see the fault current and do not send ZSI outputs.
- CB1 sends a ZSI output signal. In this example that signal is not wired.
- CB1 gets no input from any lower zone circuit breaker. This breaker will then trip immediately without any time delay. CB1 interrupts the fault and the clearance time is reduced by approximately 250ms.

Making Current Release (MCR)

All PT unit styles have a Making Current Release (MCR) function. This safety feature prevents the circuit breaker from being closed and latched-in on a faulted circuit. The MCR is enabled only for the first two cycles of current following the initial circuit breaker closing operation. The circuit breaker will trip with no delay and the instantaneous ("INST") indicator will blink.

High Instantaneous Protection

The PT unit provides a high instantaneous trip function that will trip the circuit breaker at the withstand current rating. This function is factory set within the frame module and reacts to the peak current. It is always active regardless of the user's instantaneous adjustment selection, including "OFF". The instantaneous ("INST") indicator shows this cause of trip.

Modbus Communication

A Modbus communication port is integrated for certain trip unit styles. This provides communication from the trip unit to a field Modbus bus network.

When powered, the trip unit will be able to communicate via the secondary terminals, labeled MODBA (6), MODBB (17), and MODBG (18) as a slave device. Recommended Modbus cable has shielded twisted-pair wires.

Circuit Breaker Health Diagnosis

The PT unit includes a new algorithm to monitor the health of the circuit breaker. The parameters monitored by the algorithm include short circuit, over load, operation, temperature, and operating time. The combination of all these parameters provides an overall picture of the circuit breaker condition and can be used for preventive maintenance and improved system reliability.

- The health of the circuit breaker is represented by the health percentage. A circuit breaker reports 100% health corresponding to 100% remaining service life.
- The circuit breaker health values can be used to set the health alarm threshold, ranging from 0% to 50%, with the adjustable step of 1%.
- The health values can be viewed through the PTM software, which can also be mapped into a configurable relay. These values can be viewed on the screen for PT20/25 devices.

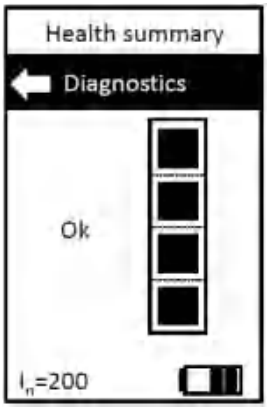

Advanced Protections (PT20/25 Only)

The PT20/25 provides a set of advanced protection features that can be configured to OFF (by default), Alarm or Trip.

Over Voltage Protection

The trip unit continuously monitors the line voltage rms values (Vab, Vbc, Vca). If the line voltage at any phase is greater than the over voltage setting, and the corresponding delay time setting is exceeded, the trip unit will act (OFF, Alarm or Trip).

Under Voltage Protection

If the line voltage at any phase is lower than the under voltage setting, and the corresponding delay time setting is exceeded, the trip unit will act.

If both over voltage and under voltage protections are enabled, the under voltage setting should always be lower than the over voltage setting.

Phase Sequence Protection

The phase sequence protection can be set to positive sequence (A-B-C), or negative (A-C-B) sequence action. When the phase sequence of the three phase voltages is the same as the setting, the trip unit will act.

When the phase voltages of all three phases are greater than 100V, phase sequence metering will be activated.

Demand Protection

Current demand protection.

Current demand protection is a type of current protection mechanism for each phase. Different thresholds can be set for different phases (independent from each other), and the same time delay parameters are used for all three phases.

When the current of any of the three phases is greater than the protection threshold of that phase and the corresponding time delay setting is reached, the trip unit will act.

Power demand protection (PT25 only)

When the detected active power is greater than the defined power demand setting, and the corresponding time delay setting is reached, the trip device will act.

Frequency Protection

Over frequency protection: When the frequency detected by the trip unit exceeds the over frequency setting, and the corresponding time delay setting is exceeded, the trip device will act.

Under frequency protection: If the frequency detected by the trip unit is lower than the under frequency setting and the corresponding time delay setting is exceeded, the trip unit will act.

When Phase A's phase voltage is greater than 100V, the frequency protection will be activated.

Voltage Unbalance

If the difference between the maximum and minimum values of the line voltage in three phases is greater than the voltage unbalance's voltage setting, and the corresponding time delay setting is exceeded, the trip unit will act.

Voltage unbalance protection is effective only when the line voltage in at least one phase is greater than 84V.

Current Unbalance

The trip unit continuously monitors the rms current value of each item (Ia, Ib, Ic).

Unbalance protection prevents partial or complete absence of current in one or two phases. If the difference between the maximum and minimum values of the three-phase current is greater than the current unbalance's current setting, and the corresponding time delay setting is exceeded, the trip unit will act.

Notes: Current unbalance protection is effective only when at least one phase current is greater than 50% of the long delay pickuup (LDPU or I_r) value.

Advanced Protection Features (PT25 only, unless Specified)

Protection		Unit	Setting		Note
Voltage Protection	Over-voltage Pickup	V	180-720 adjustable	Interval of 1	
	Over-voltage Delay	s	1~ 300 adjustable	Interval of 1	
	Under-voltage Pickup	V	60-670 adjustable	Interval of 1	
	Under- voltage Delay	s	1- 300 adjustable	Interval of 1	
	Voltage Unbalance Pickup	% V	5- 25 adjustable	Interval of 1	
	Voltage Unbalance Delay	s	1- 300 adjustable	Interval of 1	
Current Protection	Current Unbalance Pickup	% A	5- 25 adjustable	Interval of 1	
	Current Unbalance Delay	s	1- 300 adjustable	Interval of 1	
	Phase Loss Pickup	% A	75		
	Phase Loss Delay	s	1- 240 adjustable	Interval of 1	
Power Protection	Reverse Power Pickup	kW	1- 65500 adjustable	Interval of 1	
	Reverse Power Delay	s	1- 300 adjustable	Interval of 1	
Frequency Protection	Over-frequency Pickup	Hz	40- 70 adjustable	Interval of 1	When Phase-A phase voltage exceeds 100V, the frequency metering will start
	Over-frequency Delay	s	0.2- 5 adjustable	Interval of 0.1	
	Under-frequency Pickup	Hz	40- 70 adjustable	Interval of 1	
	Under-frequency Delay	s	0.2- 5 adjustable	Interval of 0.1	
Phase Sequence Protection	Positive Sequence (A-B-C)		3-phase voltage sequence is the same as the setting, and the trip unit acts		When all three phase voltages exceed 100V, the phase sequence metering will start
	Reversed Sequence (A-C-B)				
Demand Protection	Current Demand Pickup	x (I_n)	0.2-1.0 adjustable	Interval of 0.1	PT20/25 supports this function
	Current Demand Delay	s	15-1500 adjustable	Interval of 1	
	Power Demand Pickup	kW	1- 65500 adjustable	Interval of 1	
	Power Demand Delay	s	15-1500 adjustable	Interval of 1	

Relays and Digital Inputs (PT25 only)

Relay Configuration

There are 3 relay modules integrated in the PT25 unit which are used to indicate status information to other systems. All relays in the PT unit can be configured to any conditions in below table. Configuration is conveniently done using the PTM software. Relays require an auxiliary power to operate.

Function name	Description of relay operation "The relay will close when..."	Description of relay operation "The relay will open when ...."
Overload Trip	There is a long or over-temperature trip	RESET button is pressed or communications reset command received
Neutral Trip	There is a neutral current trip	RESET button is pressed or communications reset command received
Short Delay Trip	There is a short delay trip	RESET button is pressed or communications reset command received
Instantaneous Trip	There is an instantaneous trip or mcr trip	RESET button is pressed or communications reset command received
Short Circuit Trip	There is a short, inst or high inst trip	RESET button is pressed or communications reset command received
Ground Fault Trip	There is a ground fault trip	RESET button is pressed or communications reset command received
All Trips	Any of protective trip (overload, neutral, short delay, instantaneous, ground)	RESET button is pressed or communications reset command received
High Load 1	Current flow is greater than set point (adjustable from 50% to 120% of i_r)	Current flow falls 5% below the set point
High Load 2	Current flow is greater than set point (adjustable from 50% to 120% of i_r)	Current flow falls 5% below the set point
Over Temperature Alarm	Temperature exceeds 5°c below the level of the temperature trip setting	Temperature falls 5°c below the setting
Ground Fault Early Warning	Ground current is greater than the set point (adjustable from 50% to 100%)	Ground current falls 5% below the set point
Thermal Memory	The thermal memory value is greater than set point (adjustable from 50% to 100%)	Thermal Memory falls 5% below the set point
Watchdog	Auxiliary power is active and the trip unit is healthy and operating	there is an error detected in the trip unit from any of the self-diagnostics
Low Battery	The battery is below 1 bar (20%)	the battery value is 1 bar (20%) or higher
Internal (HW) Fault	There is an internal fault detected	RESET button is pressed or communications reset command received
Setpoint Mismatch	A setpoint in the trip unit does not match the cam's configuration	RESET button is pressed or communications reset command received
Breaker Health Alarm	The health value is at or above the set point	the health value is below the set point
Communication Error	Any external communications error occurs	RESET button is pressed or communications reset command received
All Faults	Any of internal fault, setpoint mismatch, breaker health alarm, or communication error faults	All of internal fault, setpoint mismatch, breaker health alarm, or communication error are inactive
Aux Contact	Breaker is closed	Breaker is open
Trip Contact	Breaker is tripped	Breaker is not tripped (it is open or closed)
ZSI Active	The zsi function active	ZSI is not active
ZSI Input Received	A zsi input signal is received	RESET button is pressed or communications reset command received
ZSI Output Sent	A zsi output signal is sent	RESET button is pressed or communications reset command received
Open Breaker Pulse	An open breaker command from any of the communications channels is received	2 seconds after the OPEN breaker command is received
Close Breaker Pulse	A close breaker command from any of the communications channels is received	2 seconds after the CLOSE breaker command is received
Mechanical Fault Trip	A mechanical fault occurs and is disengaged, the mechanism position is in the open position, but there is measurable current	The fault is removed
Mechanical Fault Alarm	A mechanism fault alarm occurs (ta fault, mechanism open, but there is measurable current)	Relevant fault is removed
Electrical Fault Alarm	Electrical fault (configuration reading errors, clock faults, watchdog faults, breaker health alarm) alarm has occurred	Relevant fault is removed
Over-voltage Trip	Over-voltage trip is active and over-voltage trip has occurred	RESET button is pressed or communications reset command received
Over-voltage Alarm	Over-voltage alarm is active and over-voltage alarm has occurred	RESET button is pressed or communications reset command received
Under-voltage Trip	Under-voltage trip is active and under-voltage trip has occurred	RESET button is pressed or communications reset command received
Under-voltage Alarm	Under-voltage alarm is active and under-voltage alarm has occurred	RESET button is pressed or communications reset command received
Over-frequency Trip	Over-frequency trip is active and over-frequency trip has occurred	RESET button is pressed or communications reset command received
Over-frequency Alarm	Over-frequency alarm is active and over-frequency alarm has occurred	RESET button is pressed or communications reset command received
Under-frequency Trip	Under-frequency trip is active and under-frequency trip has occurred	RESET button is pressed or communications reset command received
Under-frequency Alarm	Under-frequency alarm is active and under-frequency alarm has occurred	RESET button is pressed or communications reset command received
Voltage Unbalance Trip	Voltage unbalance trip is active and voltage unbalance trip has occurred	RESET button is pressed or communications reset command received
Voltage Unbalance Alarm	Voltage unbalance alarm is active and voltage unbalance alarm has occurred	RESET button is pressed or communications reset command received
Current Unbalance Trip	Current unbalance trip is active and current unbalance trip has occurred	RESET button is pressed or communications reset command received

Relay Configuration (Continued)

Function name	Description of relay operation "The relay will close when..."	Description of relay operation "The relay will open when ...."
Current Unbalance Alarm	Current unbalance alarm is active and current unbalance alarm has occurred	RESET button is pressed or communications reset command received
Reverse Power Trip	Reverse power trip is active and reverse power trip has occurred	RESET button is pressed or communications reset command received
Reverse Power Alarm	Reverse power alarm is active and reverse power alarm has occurred	RESET button is pressed or communications reset command received
Phase Sequence Trip	Phase sequence trip is active and phase sequence trip has occurred	RESET button is pressed or communications reset command received
Phase Sequence Alarm	Phase sequence alarm is active and phase sequence alarm has occurred	RESET button is pressed or communications reset command received
Phase Loss Trip	Phase loss trip is active and phase loss trip has occurred	RESET button is pressed or communications reset command received
Phase Loss Alarm	Phase loss alarm is active and phase loss alarm has occurred	RESET button is pressed or communications reset command received
Power Demand Trip	Power demand trip is active and power demand trip has occurred	RESET button is pressed or communications reset command received
Power Demand Alarm	Power demand alarm is active and power demand alarm has occurred	RESET button is pressed or communications reset command received
OFF	Relay is disabled	Relay is disabled

Digital Inputs (DI)

The PT25 trip unit supports 2 sets of 220VAC digital inputs. The corresponding status value will be written upon receiving external 220VAC signal inputs. The status value can be read via Modbus communication or through the PTM software.

Power Trip Management (PTM) Software

Eaton's Power Trip Management (PTM) is a Microsoft® Windows-based software that configures, controls, monitors, and tests Eaton PT series trip units.

The software is available as a download from the following link: http://www.eaton.com.cn/PTM

The PTM software supports below key functions:

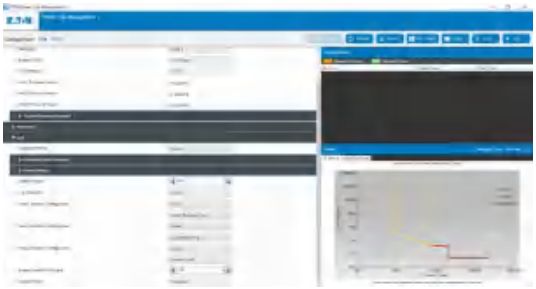

Read / Change / Copy Circuit Breaker Settings and Protections

Circuit breaker parameters can be read, changed, and loaded via PTM. The setup parameters of the trip unit can be also copied to another trip unit.

Waveform Capture

The PT unit allows users to manually capture current and/or voltage waveforms. To capture waveforms, click the Capture Waveform button. The PT unit will then capture a complete waveform cycle and transfer it to the PTM software for display.

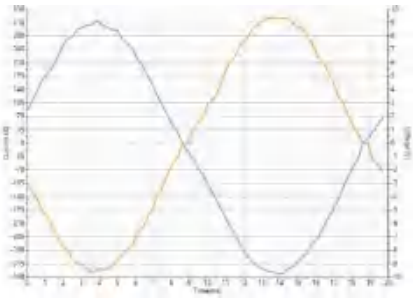

Testing the Circuit Breaker and Trip Unit

Testing conducted via PTM enables technicians to drastically reduce the number of events required for testing, make maintenance easier, and produce test reports easily.

The PTM software is used to control testing of long delay trip, short delay trip, instantaneous trip, current unbalance and phase loss, as well as ground (earth) fault trip via the USB communication. The software allows for testing on any phase including neutral.

The PT unit has internal simulated current test and internal secondary injected current test. Both test modes can be configured for tripping or not tripping the circuit breaker.

Simulated tests make it easy to verify multiple points on the event current curve, and the test current values can be simulated under software algorithms to accurately verify the accuracy of the trip unit.

Circuit breaker opening test allows users to verify mechanical functionality of their circuit breakers. In addition, the test is able to check the tripping status of the circuit breaker of the device.

Event Recording

Up to 200 event records can be stored, with detailed information on the latest 10 trip events and 10 alarm events, stamped with real-world time.

Report Generation and Storage

Circuit breaker real-time data and time records can be printed. Customer name, location, environment, device situation can be entered before the report is printed. One document can report all test results, or annual inspection results.

IZM6 Series Air Circuit Breakers

Ordering Description

Devices supplied as standard:

Withdrawable circuit breaker's basic device, cassette, shunt release (220V AC), closing release (220V AC), motor operator (220V AC), auxiliary contact (4CO), PT intelligent trip unit, overcurrent trip switch OTS (1CO), door escutcheon, wiring terminal, 220V AC to DC24V power module, safety shutter, arc distinguishing cover, and handle.

PT20 Trip Unit Supplied as Standard - Current Mode (LCD), Withdrawable Type

Current mode LSI			3P		4P	
Frame	**Rated current I_n (A)**	**Switching capacity I_{cu} (kA @440V AC)**	**Part No.**	**Article No.**	**Part No.**	**Article No.**
IZM61	200	66	**IZM61N3C-A02WH**	CAM-94384	**IZM61N4C-A02WH**	CAM-94412
	400	66	**IZM61N3C-A04WH**	CAM-94385	**IZM61N4C-A04WH**	CAM-94413
	630	66	**IZM61N3C-A06WH**	CAM-94386	**IZM61N4C-A06WH**	CAM-94414
	800	66	**IZM61N3C-A08WH**	CAM-94387	**IZM61N4C-A08WH**	CAM-94415
	1000	66	**IZM61N3C-A10WH**	CAM-94388	**IZM61N4C-A10WH**	CAM-94416
	1250	66	**IZM61N3C-A12WH**	CAM-94389	**IZM61N4C-A12WH**	CAM-94417
	1600	66	**IZM61N3C-A16WH**	CAM-94390	**IZM61N4C-A16WH**	CAM-94418
Current mode LSIG						
IZM61	200	66	**IZM61N3C-AG02WH**	CAM-94398	**IZM61N4C-AG02WH**	CAM-94426
	400	66	**IZM61N3C-AG04WH**	CAM-94399	**IZM61N4C-AG04WH**	CAM-94427
	630	66	**IZM61N3C-AG06WH**	CAM-94400	**IZM61N4C-AG06WH**	CAM-94428
	800	66	**IZM61N3C-AG08WH**	CAM-94401	**IZM61N4C-AG08WH**	CAM-94429
	1000	66	**IZM61N3C-AG10WH**	CAM-94402	**IZM61N4C-AG10WH**	CAM-94430
	1250	66	**IZM61N3C-AG12WH**	CAM-94403	**IZM61N4C-AG12WH**	CAM-94431
	1600	66	**IZM61N3C-AG16WH**	CAM-94404	**IZM61N4C-AG16WH**	CAM-94432
Current mode LSI + communication						
IZM61	200	66	**IZM61N3C-AC02WH**	CAM-94391	**IZM61N4C-AC02WH**	CAM-94419
	400	66	**IZM61N3C-AC04WH**	CAM-94392	**IZM61N4C-AC04WH**	CAM-94420
	630	66	**IZM61N3C-AC06WH**	CAM-94393	**IZM61N4C-AC06WH**	CAM-94421
	800	66	**IZM61N3C-AC08WH**	CAM-94394	**IZM61N4C-AC08WH**	CAM-94422
	1000	66	**IZM61N3C-AC10WH**	CAM-94395	**IZM61N4C-AC10WH**	CAM-94423
	1250	66	**IZM61N3C-AC12WH**	CAM-94396	**IZM61N4C-AC12WH**	CAM-94424
	1600	66	**IZM61N3C-AC16WH**	CAM-94397	**IZM61N4C-AC16WH**	CAM-94425
Current mode LSIG + communication						
IZM61	200	66	**IZM61N3C-AGC02WH**	CAM-94405	**IZM61N4C-AGC02WH**	CAM-94433
	400	66	**IZM61N3C-AGC04WH**	CAM-94406	**IZM61N4C-AGC04WH**	CAM-94434
	630	66	**IZM61N3C-AGC06WH**	CAM-94407	**IZM61N4C-AGC06WH**	CAM-94435
	800	66	**IZM61N3C-AGC08WH**	CAM-94408	**IZM61N4C-AGC08WH**	CAM-94436
	1000	66	**IZM61N3C-AGC10WH**	CAM-94409	**IZM61N4C-AGC10WH**	CAM-94437
	1250	66	**IZM61N3C-AGC12WH**	CAM-94410	**IZM61N4C-AGC12WH**	CAM-94438
	1600	66	**IZM61N3C-AGC16WH**	CAM-94411	**IZM61N4C-AGC16WH**	CAM-94439

PT25 Trip Unit Supplied as Standard - Power mode (LCD), Withdrawable Type

Power mode LSI			3P		4P	
Frame	**Rated current I_n (A)**	**Switching capacity I_{cu} (kA @440V AC)**	**Part No.**	**Article No.**	**Part No.**	**Article No.**
IZM61	200	66	**IZM61N3C-P02WH**	CAM-94688	**IZM61N4C-P02WH**	CAM-94702
	400	66	**IZM61N3C-P04WH**	CAM-94689	**IZM61N4C-P04WH**	CAM-94703
	630	66	**IZM61N3C-P06WH**	CAM-94690	**IZM61N4C-P06WH**	CAM-94704
	800	66	**IZM61N3C-P08WH**	CAM-94691	**IZM61N4C-P08WH**	CAM-94705
	1000	66	**IZM61N3C-P10WH**	CAM-94692	**IZM61N4C-P10WH**	CAM-94706
	1250	66	**IZM61N3C-P12WH**	CAM-94693	**IZM61N4C-P12WH**	CAM-94707
	1600	66	**IZM61N3C-P16WH**	CAM-94694	**IZM61N4C-P16WH**	CAM-94708
Power mode LSIG						
IZM61	200	66	**IZM61N3C-PG02WH**	CAM-94695	**IZM61N4C-PG02WH**	CAM-94709
	400	66	**IZM61N3C-PG04WH**	CAM-94696	**IZM61N4C-PG04WH**	CAM-94710
	630	66	**IZM61N3C-PG06WH**	CAM-94697	**IZM61N4C-PG06WH**	CAM-94711
	800	66	**IZM61N3C-PG08WH**	CAM-94698	**IZM61N4C-PG08WH**	CAM-94712
	1000	66	**IZM61N3C-PG10WH**	CAM-94699	**IZM61N4C-PG10WH**	CAM-94713
	1250	66	**IZM61N3C-PG12WH**	CAM-94700	**IZM61N4C-PG12WH**	CAM-94714
	1600	66	**IZM61N3C-PG16WH**	CAM-94701	**IZM61N4C-PG16WH**	CAM-94715

Devices supplied as standard:

Fixed circuit breaker's basic device, shunt release (220V AC), closing release (220V AC), motor operator (220V AC), auxiliary contact(4CO), PT intelligent trip unit, over current trip switch OTS (1CO), door escutcheon, wiring terminal, 220V AC to DC24V power module, arc distinguishing cover, and handle.

PT20 Trip Unit Supplied as Standard - Current mode (LCD), Fixed Type

Current mode LSI			3P		4P	
Frame	**Rated current I_n (A)**	**Switching capacity I_{cu} (kA @440V AC)**	**Part No.**	**Article No.**	**Part No.**	**Article No.**
IZM61	200	66	**IZM61N3C-A02FH**	CAM-94440	**IZM61N4C-A02FH**	CAM-94468
	400	66	**IZM61N3C-A04FH**	CAM-94441	**IZM61N4C-A04FH**	CAM-94469
	630	66	**IZM61N3C-A06FH**	CAM-94442	**IZM61N4C-A06FH**	CAM-94470
	800	66	**IZM61N3C-A08FH**	CAM-94443	**IZM61N4C-A08FH**	CAM-94471
	1000	66	**IZM61N3C-A10FH**	CAM-94444	**IZM61N4C-A10FH**	CAM-94472
	1250	66	**IZM61N3C-A12FH**	CAM-94445	**IZM61N4C-A12FH**	CAM-94473
	1600	66	**IZM61N3C-A16FH**	CAM-94446	**IZM61N4C-A16FH**	CAM-94474
Current mode LSIG						
IZM61	200	66	**IZM61N3C-AG02FH**	CAM-94454	**IZM61N4C-AG02FH**	CAM-94482
	400	66	**IZM61N3C-AG04FH**	CAM-94455	**IZM61N4C-AG04FH**	CAM-94483
	630	66	**IZM61N3C-AG06FH**	CAM-94456	**IZM61N4C-AG06FH**	CAM-94484
	800	66	**IZM61N3C-AG08FH**	CAM-94457	**IZM61N4C-AG08FH**	CAM-94485
	1000	66	**IZM61N3C-AG10FH**	CAM-94458	**IZM61N4C-AG10FH**	CAM-94486
	1250	66	**IZM61N3C-AG12FH**	CAM-94459	**IZM61N4C-AG12FH**	CAM-94487
	1600	66	**IZM61N3C-AG16FH**	CAM-94460	**IZM61N4C-AG16FH**	CAM-94488
Current mode LSI + communication						
IZM61	200	66	**IZM61N3C-AC02FH**	CAM-94447	**IZM61N4C-AC02FH**	CAM-94475
	400	66	**IZM61N3C-AC04FH**	CAM-94448	**IZM61N4C-AC04FH**	CAM-94476
	630	66	**IZM61N3C-AC06FH**	CAM-94449	**IZM61N4C-AC06FH**	CAM-94477
	800	66	**IZM61N3C-AC08FH**	CAM-94450	**IZM61N4C-AC08FH**	CAM-94478
	1000	66	**IZM61N3C-AC10FH**	CAM-94451	**IZM61N4C-AC10FH**	CAM-94479
	1250	66	**IZM61N3C-AC12FH**	CAM-94452	**IZM61N4C-AC12FH**	CAM-94480
	1600	66	**IZM61N3C-AC16FH**	CAM-94453	**IZM61N4C-AC16FH**	CAM-94481
Current mode LSIG + communication						
IZM61	200	66	**IZM61N3C-AGC02FH**	CAM-94461	**IZM61N4C-AGC02FH**	CAM-94489
	400	66	**IZM61N3C-AGC04FH**	CAM-94462	**IZM61N4C-AGC04FH**	CAM-94490
	630	66	**IZM61N3C-AGC06FH**	CAM-94463	**IZM61N4C-AGC06FH**	CAM-94491
	800	66	**IZM61N3C-AGC08FH**	CAM-94464	**IZM61N4C-AGC08FH**	CAM-94492
	1000	66	**IZM61N3C-AGC10FH**	CAM-94465	**IZM61N4C-AGC10FH**	CAM-94493
	1250	66	**IZM61N3C-AGC12FH**	CAM-94466	**IZM61N4C-AGC12FH**	CAM-94494
	1600	66	**IZM61N3C-AGC16FH**	CAM-94467	**IZM61N4C-AGC16FH**	CAM-94495

PT25 Trip Unit Supplied as Standard - Power mode (LCD), Fixed Type

Power mode LSI			3P		4P	
Frame	**Rated current I_n (A)**	**Switching capacity I_{cu} (kA @440V AC)**	**Part No.**	**Article No.**	**Part No.**	**Article No.**
IZM61	200	66	**IZM61N3C-P02FH**	CAM-94716	**IZM61N4C-P02FH**	CAM-94730
	400	66	**IZM61N3C-P04FH**	CAM-94717	**IZM61N4C-P04FH**	CAM-94731
	630	66	**IZM61N3C-P06FH**	CAM-94718	**IZM61N4C-P06FH**	CAM-94732
	800	66	**IZM61N3C-P08FH**	CAM-94719	**IZM61N4C-P08FH**	CAM-94733
	1000	66	**IZM61N3C-P10FH**	CAM-94720	**IZM61N4C-P10FH**	CAM-94734
	1250	66	**IZM61N3C-P12FH**	CAM-94721	**IZM61N4C-P12FH**	CAM-94735
	1600	66	**IZM61N3C-P16FH**	CAM-94722	**IZM61N4C-P16FH**	CAM-94736
Power mode LSIG						
IZM61	200	66	**IZM61N3C-PG02FH**	CAM-94723	**IZM61N4C-PG02FH**	CAM-94737
	400	66	**IZM61N3C-PG04FH**	CAM-94724	**IZM61N4C-PG04FH**	CAM-94738
	630	66	**IZM61N3C-PG06FH**	CAM-94725	**IZM61N4C-PG06FH**	CAM-94739
	800	66	**IZM61N3C-PG08FH**	CAM-94726	**IZM61N4C-PG08FH**	CAM-94740
	1000	66	**IZM61N3C-PG10FH**	CAM-94727	**IZM61N4C-PG10FH**	CAM-94741
	1250	66	**IZM61N3C-PG12FH**	CAM-94728	**IZM61N4C-PG12FH**	CAM-94742
	1600	66	**IZM61N3C-PG16FH**	CAM-94729	**IZM61N4C-PG16FH**	CAM-94743

Devices supplied as standard:

Withdrawable circuit breaker's basic device, cassette, shunt release (220V AC), closing release (220V AC), motor operator (220V AC), auxiliary contact (4CO), PT intelligent trip unit, overcurrent trip switch OTS (1CO), door escutcheon, wiring terminal, 220V AC to DC24V power module, safety shutter, arc distinguishing cover, and handle.

PT10 Trip Unit Supplied as Standard - Current mode (Rotary Switch), Withdrawable Type

Current mode LSI			3P		4P	
Frame	**Rated current I_n (A)**	**Switching capacity I_{cu} (kA @440V AC)**	**Part No.**	**Article No.**	**Part No.**	**Article No.**
IZM61	200	66	**IZM61N3C-D02WH**	CAM-94936	**IZM61N4C-D02WH**	CAM-94950
	400	66	**IZM61N3C-D04WH**	CAM-94937	**IZM61N4C-D04WH**	CAM-94951
	630	66	**IZM61N3C-D06WH**	CAM-94938	**IZM61N4C-D06WH**	CAM-94952
	800	66	**IZM61N3C-D08WH**	CAM-94939	**IZM61N4C-D08WH**	CAM-94953
	1000	66	**IZM61N3C-D10WH**	CAM-94940	**IZM61N4C-D10WH**	CAM-94954
	1250	66	**IZM61N3C-D12WH**	CAM-94941	**IZM61N4C-D12WH**	CAM-94955
	1600	66	**IZM61N3C-D16WH**	CAM-94942	**IZM61N4C-D16WH**	CAM-94956
Current mode LSIG						
IZM61	200	66	**IZM61N3C-DG02WH**	CAM-94943	**IZM61N4C-DG02WH**	CAM-94957
	400	66	**IZM61N3C-DG04WH**	CAM-94944	**IZM61N4C-DG04WH**	CAM-94958
	630	66	**IZM61N3C-DG06WH**	CAM-94945	**IZM61N4C-DG06WH**	CAM-94959
	800	66	**IZM61N3C-DG08WH**	CAM-94946	**IZM61N4C-DG08WH**	CAM-94960
	1000	66	**IZM61N3C-DG10WH**	CAM-94947	**IZM61N4C-DG10WH**	CAM-94961
	1250	66	**IZM61N3C-DG12WH**	CAM-94948	**IZM61N4C-DG12WH**	CAM-94962
	1600	66	**IZM61N3C-DG16WH**	CAM-94949	**IZM61N4C-DG16WH**	CAM-94963

Devices supplied as standard:

Fixed circuit breaker's basic device, shunt release (220V AC), closing release (220V AC), motor operator (220V AC), auxiliary contact(4CO), PT intelligent trip unit, over current trip switch OTS (1CO), door escutcheon, wiring terminal, 220V AC to DC24V power module, arc distinguishing cover, and handle.

PT10 Trip Unit Supplied as Standard - Current mode (Rotary Switch), Fixed Type

Current mode LSI			3P		4P	
Frame	**Rated current I_n (A)**	**Switching capacity I_{cu} (kA @440V AC)**	**Part No.**	**Article No.**	**Part No.**	**Article No.**
IZM61	200	66	**IZM61N3C-D02FH**	CAM-94964	**IZM61N4C-D02FH**	CAM-94978
	400	66	**IZM61N3C-D04FH**	CAM-94965	**IZM61N4C-D04FH**	CAM-94979
	630	66	**IZM61N3C-D06FH**	CAM-94966	**IZM61N4C-D06FH**	CAM-94980
	800	66	**IZM61N3C-D08FH**	CAM-94967	**IZM61N4C-D08FH**	CAM-94981
	1000	66	**IZM61N3C-D10FH**	CAM-94968	**IZM61N4C-D10FH**	CAM-94982
	1250	66	**IZM61N3C-D12FH**	CAM-94969	**IZM61N4C-D12FH**	CAM-94983
	1600	66	**IZM61N3C-D16FH**	CAM-94970	**IZM61N4C-D16FH**	CAM-94984
Current mode LSIG						
IZM61	200	66	**IZM61N3C-DG02FH**	CAM-94971	**IZM61N4C-DG02FH**	CAM-94985
	400	66	**IZM61N3C-DG04FH**	CAM-94972	**IZM61N4C-DG04FH**	CAM-94986
	630	66	**IZM61N3C-DG06FH**	CAM-94973	**IZM61N4C-DG06FH**	CAM-94987
	800	66	**IZM61N3C-DG08FH**	CAM-94974	**IZM61N4C-DG08FH**	CAM-94988
	1000	66	**IZM61N3C-DG10FH**	CAM-94975	**IZM61N4C-DG10FH**	CAM-94989
	1250	66	**IZM61N3C-DG12FH**	CAM-94976	**IZM61N4C-DG12FH**	CAM-94990
	1600	66	**IZM61N3C-DG16FH**	CAM-94977	**IZM61N4C-DG16FH**	CAM-94991

Devices supplied as standard:

Withdrawable circuit breaker's basic device, cassette, shunt release (220V AC), closing release (220V AC), motor operator (220V AC), auxiliary contact (4CO), PT intelligent trip unit, overcurrent trip switch OTS (1CO), door escutcheon, wiring terminal, 220V AC to DC24V power module, safety shutter, arc distinguishing cover, and handle.

PT20Trip Unit Supplied as Standard - Current Mode (LCD), Withdrawable Type

Current mode LSI			3P		4P	
Frame	**Rated current I_n (A)**	**Switching capacity I_{cu} (kA @690V AC)**	**Part No.**	**Article No.**	**Part No.**	**Article No.**
IZM65	400	55	**IZM65B3C-A04WH**	CAM-94192	**IZM65B4C-A04WH**	CAM-94204
	630	55	**IZM65B3C-A06WH**	CAM-94193	**IZM65B4C-A06WH**	CAM-94205
	800	55	**IZM65B3C-A08WH**	CAM-94194	**IZM65B4C-A08WH**	CAM-94206
	1000	55	**IZM65B3C-A10WH**	CAM-94195	**IZM65B4C-A10WH**	CAM-94207
	1250	55	**IZM65B3C-A12WH**	CAM-94196	**IZM65B4C-A12WH**	CAM-94208
	1600	55	**IZM65B3C-A16WH**	CAM-94197	**IZM65B4C-A16WH**	CAM-94209
	2000	55	**IZM65B3C-A20WH**	CAM-94198	**IZM65B4C-A20WH**	CAM-94210
	2500	55	**IZM65B3C-A25WH**	CAM-94199	**IZM65B4C-A25WH**	CAM-94211
IZM67	2000	55	**IZM67B3C-A20WH**	CAM-94200	**IZM67B4C-A20WH**	CAM-94212
	2500	55	**IZM67B3C-A25WH**	CAM-94201	**IZM67B4C-A25WH**	CAM-94213
	3200	55	**IZM67B3C-A32WH**	CAM-94202	**IZM67B4C-A32WH**	CAM-94214
	4000	55	**IZM67B3C-A40WH**	CAM-94203	**IZM67B4C-A40WH**	CAM-94215
	4000	55	**IZM67B3C-A40WV**	CAM-96152	**IZM67B4C-A40WV**	CAM-96153
Current mode LSIG						
IZM65	400	55	**IZM65B3C-AG04WH**	CAM-94216	**IZM65B4C-AG04WH**	CAM-94228
	630	55	**IZM65B3C-AG06WH**	CAM-94217	**IZM65B4C-AG06WH**	CAM-94229
	800	55	**IZM65B3C-AG08WH**	CAM-94218	**IZM65B4C-AG08WH**	CAM-94230
	1000	55	**IZM65B3C-AG10WH**	CAM-94219	**IZM65B4C-AG10WH**	CAM-94231
	1250	55	**IZM65B3C-AG12WH**	CAM-94220	**IZM65B4C-AG12WH**	CAM-94232
	1600	55	**IZM65B3C-AG16WH**	CAM-94221	**IZM65B4C-AG16WH**	CAM-94233
	2000	55	**IZM65B3C-AG20WH**	CAM-94222	**IZM65B4C-AG20WH**	CAM-94234
	2500	55	**IZM65B3C-AG25WH**	CAM-94223	**IZM65B4C-AG25WH**	CAM-94235
IZM67	2000	55	**IZM67B3C-AG20WH**	CAM-94224	**IZM67B4C-AG20WH**	CAM-94236
	2500	55	**IZM67B3C-AG25WH**	CAM-94225	**IZM67B4C-AG25WH**	CAM-94237
	3200	55	**IZM67B3C-AG32WH**	CAM-94226	**IZM67B4C-AG32WH**	CAM-94238
	4000	55	**IZM67B3C-AG40WH**	CAM-94227	**IZM67B4C-AG40WH**	CAM-94239
	4000	55	**IZM67B3C-AG40WV**	CAM-96154	**IZM67B4C-AG40WV**	CAM-96155
Current mode LSI + communication						
IZM65	400	55	**IZM65B3C-AC04WH**	CAM-94240	**IZM65B4C-AC04WH**	CAM-94252
	630	55	**IZM65B3C-AC06WH**	CAM-94241	**IZM65B4C-AC06WH**	CAM-94253
	800	55	**IZM65B3C-AC08WH**	CAM-94242	**IZM65B4C-AC08WH**	CAM-94254
	1000	55	**IZM65B3C-AC10WH**	CAM-94243	**IZM65B4C-AC10WH**	CAM-94255
	1250	55	**IZM65B3C-AC12WH**	CAM-94244	**IZM65B4C-AC12WH**	CAM-94256
	1600	55	**IZM65B3C-AC16WH**	CAM-94245	**IZM65B4C-AC16WH**	CAM-94257
	2000	55	**IZM65B3C-AC20WH**	CAM-94246	**IZM65B4C-AC20WH**	CAM-94258
	2500	55	**IZM65B3C-AC25WH**	CAM-94247	**IZM65B4C-AC25WH**	CAM-94259
IZM67	2000	55	**IZM67B3C-AC20WH**	CAM-94248	**IZM67B4C-AC20WH**	CAM-94260
	2500	55	**IZM67B3C-AC25WH**	CAM-94249	**IZM67B4C-AC25WH**	CAM-94261
	3200	55	**IZM67B3C-AC32WH**	CAM-94250	**IZM67B4C-AC32WH**	CAM-94262
	4000	55	**IZM67B3C-AC40WH**	CAM-94251	**IZM67B4C-AC40WH**	CAM-94263
	4000	55	**IZM67B3C-AC40WV**	CAM-96156	**IZM67B4C-AC40WV**	CAM-96157
Current mode LSIG + communication						
IZM65	400	55	**IZM65B3C-AGC04WH**	CAM-94264	**IZM65B4C-AGC04WH**	CAM-94276
	630	55	**IZM65B3C-AGC06WH**	CAM-94265	**IZM65B4C-AGC06WH**	CAM-94277
	800	55	**IZM65B3C-AGC08WH**	CAM-94266	**IZM65B4C-AGC08WH**	CAM-94278
	1000	55	**IZM65B3C-AGC10WH**	CAM-94267	**IZM65B4C-AGC10WH**	CAM-94279
	1250	55	**IZM65B3C-AGC12WH**	CAM-94268	**IZM65B4C-AGC12WH**	CAM-94280
	1600	55	**IZM65B3C-AGC16WH**	CAM-94269	**IZM65B4C-AGC16WH**	CAM-94281
	2000	55	**IZM65B3C-AGC20WH**	CAM-94270	**IZM65B4C-AGC20WH**	CAM-94282
	2500	55	**IZM65B3C-AGC25WH**	CAM-94271	**IZM65B4C-AGC25WH**	CAM-94283
IZM67	2000	55	**IZM67B3C-AGC20WH**	CAM-94272	**IZM67B4C-AGC20WH**	CAM-94284
	2500	55	**IZM67B3C-AGC25WH**	CAM-94273	**IZM67B4C-AGC25WH**	CAM-94285
	3200	55	**IZM67B3C-AGC32WH**	CAM-94274	**IZM67B4C-AGC32WH**	CAM-94286
	4000	55	**IZM67B3C-AGC40WH**	CAM-94275	**IZM67B4C-AGC40WH**	CAM-94287
	4000	55	**IZM67B3C-AGC40WV**	CAM-96158	**IZM67B4C-AGC40WV**	CAM-96159

IZM6 Series Air Circuit Breakers

Ordering Description

Devices supplied as standard:

Withdrawable circuit breaker's basic device, cassette, shunt release (220V AC), closing release (220V AC), motor operator (220V AC), auxiliary contact (4CO), PT intelligent trip unit, overcurrent trip switch OTS (1CO), door escutcheon, wiring terminal, 220V AC to DC24V power module, safety shutter, arc distinguishing cover, and handle.

PT20Trip Unit Supplied as Standard - Current Mode (LCD), Withdrawable Type

Current mode LSI			3P		4P	
Frame	**Rated current I_n (A)**	**Switching capacity I_{cu} (kA @690V AC)**	**Part No.**	**Article No.**	**Part No.**	**Article No.**
IZM65	400	66	**IZM65N3C-A04WH**	CAM-94000	**IZM65N4C-A04WH**	CAM-94012
	630	66	**IZM65N3C-A06WH**	CAM-94001	**IZM65N4C-A06WH**	CAM-94013
	800	66	**IZM65N3C-A08WH**	CAM-94002	**IZM65N4C-A08WH**	CAM-94014
	1000	66	**IZM65N3C-A10WH**	CAM-94003	**IZM65N4C-A10WH**	CAM-94015
	1250	66	**IZM65N3C-A12WH**	CAM-94004	**IZM65N4C-A12WH**	CAM-94016
	1600	66	**IZM65N3C-A16WH**	CAM-94005	**IZM65N4C-A16WH**	CAM-94017
	2000	66	**IZM65N3C-A20WH**	CAM-94006	**IZM65N4C-A20WH**	CAM-94018
	2500	66	**IZM65N3C-A25WH**	CAM-94007	**IZM65N4C-A25WH**	CAM-94019
IZM67	2000	66	**IZM67N3C-A20WH**	CAM-94008	**IZM67N4C-A20WH**	CAM-94020
	2500	66	**IZM67N3C-A25WH**	CAM-94009	**IZM67N4C-A25WH**	CAM-94021
	3200	66	**IZM67N3C-A32WH**	CAM-94010	**IZM67N4C-A32WH**	CAM-94022
	4000	66	**IZM67N3C-A40WH**	CAM-94011	**IZM67N4C-A40WH**	CAM-94023
	4000	66	**IZM67N3C-A40WV**	CAM-96136	**IZM67N4C-A40WV**	CAM-96137
Current mode LSIG						
IZM65	400	66	**IZM65N3C-AG04WH**	CAM-94024	**IZM65N4C-AG04WH**	CAM-94036
	630	66	**IZM65N3C-AG06WH**	CAM-94025	**IZM65N4C-AG06WH**	CAM-94037
	800	66	**IZM65N3C-AG08WH**	CAM-94026	**IZM65N4C-AG08WH**	CAM-94038
	1000	66	**IZM65N3C-AG10WH**	CAM-94027	**IZM65N4C-AG10WH**	CAM-94039
	1250	66	**IZM65N3C-AG12WH**	CAM-94028	**IZM65N4C-AG12WH**	CAM-94040
	1600	66	**IZM65N3C-AG16WH**	CAM-94029	**IZM65N4C-AG16WH**	CAM-94041
	2000	66	**IZM65N3C-AG20WH**	CAM-94030	**IZM65N4C-AG20WH**	CAM-94042
	2500	66	**IZM65N3C-AG25WH**	CAM-94031	**IZM65N4C-AG25WH**	CAM-94043
IZM67	2000	66	**IZM67N3C-AG20WH**	CAM-94032	**IZM67N4C-AG20WH**	CAM-94044
	2500	66	**IZM67N3C-AG25WH**	CAM-94033	**IZM67N4C-AG25WH**	CAM-94045
	3200	66	**IZM67N3C-AG32WH**	CAM-94034	**IZM67N4C-AG32WH**	CAM-94046
	4000	66	**IZM67N3C-AG40WH**	CAM-94035	**IZM67N4C-AG40WH**	CAM-94047
	4000	66	**IZM67N3C-AG40WV**	CAM-96138	**IZM67N4C-AG40WV**	CAM-96139
Current mode LSI + communication						
IZM65	400	66	**IZM65N3C-AC04WH**	CAM-94048	**IZM65N4C-AC04WH**	CAM-94060
	630	66	**IZM65N3C-AC06WH**	CAM-94049	**IZM65N4C-AC06WH**	CAM-94061
	800	66	**IZM65N3C-AC08WH**	CAM-94050	**IZM65N4C-AC08WH**	CAM-94062
	1000	66	**IZM65N3C-AC10WH**	CAM-94051	**IZM65N4C-AC10WH**	CAM-94063
	1250	66	**IZM65N3C-AC12WH**	CAM-94052	**IZM65N4C-AC12WH**	CAM-94064
	1600	66	**IZM65N3C-AC16WH**	CAM-94053	**IZM65N4C-AC16WH**	CAM-94065
	2000	66	**IZM65N3C-AC20WH**	CAM-94054	**IZM65N4C-AC20WH**	CAM-94066
	2500	66	**IZM65N3C-AC25WH**	CAM-94055	**IZM65N4C-AC25WH**	CAM-94067
IZM67	2000	66	**IZM67N3C-AC20WH**	CAM-94056	**IZM67N4C-AC20WH**	CAM-94068
	2500	66	**IZM67N3C-AC25WH**	CAM-94057	**IZM67N4C-AC25WH**	CAM-94069
	3200	66	**IZM67N3C-AC32WH**	CAM-94058	**IZM67N4C-AC32WH**	CAM-94070
	4000	66	**IZM67N3C-AC40WH**	CAM-94059	**IZM67N4C-AC40WH**	CAM-94071
	4000	66	**IZM67N3C-AC40WV**	CAM-96140	**IZM67N4C-AC40WV**	CAM-96141
Current mode LSIG + communication						
IZM65	400	66	**IZM65N3C-AGC04WH**	CAM-94072	**IZM65N4C-AGC04WH**	CAM-94084
	630	66	**IZM65N3C-AGC06WH**	CAM-94073	**IZM65N4C-AGC06WH**	CAM-94085
	800	66	**IZM65N3C-AGC08WH**	CAM-94074	**IZM65N4C-AGC08WH**	CAM-94086
	1000	66	**IZM65N3C-AGC10WH**	CAM-94075	**IZM65N4C-AGC10WH**	CAM-94087
	1250	66	**IZM65N3C-AGC12WH**	CAM-94076	**IZM65N4C-AGC12WH**	CAM-94088
	1600	66	**IZM65N3C-AGC16WH**	CAM-94077	**IZM65N4C-AGC16WH**	CAM-94089
	2000	66	**IZM65N3C-AGC20WH**	CAM-94078	**IZM65N4C-AGC20WH**	CAM-94090
	2500	66	**IZM65N3C-AGC25WH**	CAM-94079	**IZM65N4C-AGC25WH**	CAM-94091
IZM67	2000	66	**IZM67N3C-AGC20WH**	CAM-94080	**IZM67N4C-AGC20WH**	CAM-94092
	2500	66	**IZM67N3C-AGC25WH**	CAM-94081	**IZM67N4C-AGC25WH**	CAM-94093
	3200	66	**IZM67N3C-AGC32WH**	CAM-94082	**IZM67N4C-AGC32WH**	CAM-94094
	4000	66	**IZM67N3C-AGC40WH**	CAM-94083	**IZM67N4C-AGC40WH**	CAM-94095
	4000	66	**IZM67N3C-AGC40WV**	CAM-96142	**IZM67N4C-AGC40WV**	CAM-96143

Devices supplied as standard:

Withdrawable circuit breaker's basic device, cassette, shunt release (220V AC), closing release (220V AC), motor operator (220V AC), auxiliary contact (4CO), PT intelligent trip unit, overcurrent trip switch OTS (1CO), door escutcheon, wiring terminal, 220V AC to DC24V power module, safety shutter, arc distinguishing cover, and handle.

PT20Trip Unit Supplied as Standard - Current Mode (LCD), Withdrawable Type

Current mode LSI			3P		4P	
Frame	**Rated current I_n (A)**	**Switching capacity I_{cu} (kA @690V AC)**	**Part No.**	**Article No.**	**Part No.**	**Article No.**
IZM67	2000	85	**IZM67S3C-A20WH**	CAM-93250	**IZM67S4C-A20WH**	CAM-93254
	2500	85	**IZM67S3C-A25WH**	CAM-93251	**IZM67S4C-A25WH**	CAM-93255
	3200	85	**IZM67S3C-A32WH**	CAM-93252	**IZM67S4C-A32WH**	CAM-93256
	4000	85	**IZM67S3C-A40WH**	CAM-93253	**IZM67S4C-A40WH**	CAM-93257
	4000	85	**IZM67S3C-A40WV**	CAM-93506	**IZM67S4C-A40WV**	CAM-93507
Current mode LSIG						
IZM67	2000	85	**IZM67S3C-AG20WH**	CAM-93258	**IZM67S4C-AG20WH**	CAM-93262
	2500	85	**IZM67S3C-AG25WH**	CAM-93259	**IZM67S4C-AG25WH**	CAM-93263
	3200	85	**IZM67S3C-AG32WH**	CAM-93260	**IZM67S4C-AG32WH**	CAM-93264
	4000	85	**IZM67S3C-AG40WH**	CAM-93261	**IZM67S4C-AG40WH**	CAM-93265
	4000	85	**IZM67S3C-AG40WV**	CAM-93508	**IZM67S4C-AG40WV**	CAM-93509
Current mode LSI + communication						
IZM67	2000	85	**IZM67S3C-AC20WH**	CAM-93266	**IZM67S4C-AC20WH**	CAM-93270
	2500	85	**IZM67S3C-AC25WH**	CAM-93267	**IZM67S4C-AC25WH**	CAM-93271
	3200	85	**IZM67S3C-AC32WH**	CAM-93268	**IZM67S4C-AC32WH**	CAM-93272
	4000	85	**IZM67S3C-AC40WH**	CAM-93269	**IZM67S4C-AC40WH**	CAM-93273
	4000	85	**IZM67S3C-AC40WV**	CAM-93510	**IZM67S4C-AC40WV**	CAM-93511
Current mode LSI + communication						
IZM67	2000	85	**IZM67S3C-AGC20WH**	CAM-93274	**IZM67S4C-AGC20WH**	CAM-93278
	2500	85	**IZM67S3C-AGC25WH**	CAM-93275	**IZM67S4C-AGC25WH**	CAM-93279
	3200	85	**IZM67S3C-AGC32WH**	CAM-93276	**IZM67S4C-AGC32WH**	CAM-93280
	4000	85	**IZM67S3C-AGC40WH**	CAM-93277	**IZM67S4C-AGC40WH**	CAM-93281
	4000	85	**IZM67S3C-AGC40WV**	CAM-93512	**IZM67S4C-AGC40WV**	CAM-93513

IZM6 Series Air Circuit Breakers

Ordering Description

Devices supplied as standard:

Withdrawable circuit breaker's basic device, cassette, shunt release (220V AC), closing release (220V AC), motor operator (220V AC), auxiliary contact (4CO), PT intelligent trip unit, overcurrent trip switch OTS (1CO), door escutcheon, wiring terminal, 220V AC to DC24V power module, safety shutter, arc distinguishing cover, and handle.

PT25 Trip Unit Supplied as Standard - Power Mode (LCD), Withdrawable Type

Power mode LSI			3P		4P	
Frame	**Rated current I_n (A)**	**Switching capacity I_{cu} (kA @690V AC)**	**Part No.**	**Article No.**	**Part No.**	**Article No.**
IZM65	400	55	**IZM65B3C-P04WH**	CAM-94592	**IZM65B4C-P04WH**	CAM-94604
	630	55	**IZM65B3C-P06WH**	CAM-94593	**IZM65B4C-P06WH**	CAM-94605
	800	55	**IZM65B3C-P08WH**	CAM-94594	**IZM65B4C-P08WH**	CAM-94606
	1000	55	**IZM65B3C-P10WH**	CAM-94595	**IZM65B4C-P10WH**	CAM-94607
	1250	55	**IZM65B3C-P12WH**	CAM-94596	**IZM65B4C-P12WH**	CAM-94608
	1600	55	**IZM65B3C-P16WH**	CAM-94597	**IZM65B4C-P16WH**	CAM-94609
	2000	55	**IZM65B3C-P20WH**	CAM-94598	**IZM65B4C-P20WH**	CAM-94610
	2500	55	**IZM65B3C-P25WH**	CAM-94599	**IZM65B4C-P25WH**	CAM-94611
IZM67	2000	55	**IZM67B3C-P20WH**	CAM-94600	**IZM67B4C-P20WH**	CAM-94612
	2500	55	**IZM67B3C-P25WH**	CAM-94601	**IZM67B4C-P25WH**	CAM-94613
	3200	55	**IZM67B3C-P32WH**	CAM-94602	**IZM67B4C-P32WH**	CAM-94614
	4000	55	**IZM67B3C-P40WH**	CAM-94603	**IZM67B4C-P40WH**	CAM-94615
	4000	55	**IZM67B3C-P40WV**	CAM-96176	**IZM67B4C-P40WV**	CAM-96177
Power mode LSIG						
IZM65	400	55	**IZM65B3C-PG04WH**	CAM-94616	**IZM65B4C-PG04WH**	CAM-94628
	630	55	**IZM65B3C-PG06WH**	CAM-94617	**IZM65B4C-PG06WH**	CAM-94629
	800	55	**IZM65B3C-PG08WH**	CAM-94618	**IZM65B4C-PG08WH**	CAM-94630
	1000	55	**IZM65B3C-PG10WH**	CAM-94619	**IZM65B4C-PG10WH**	CAM-94631
	1250	55	**IZM65B3C-PG12WH**	CAM-94620	**IZM65B4C-PG12WH**	CAM-94632
	1600	55	**IZM65B3C-PG16WH**	CAM-94621	**IZM65B4C-PG16WH**	CAM-94633
	2000	55	**IZM65B3C-PG20WH**	CAM-94622	**IZM65B4C-PG20WH**	CAM-94634
	2500	55	**IZM65B3C-PG25WH**	CAM-94623	**IZM65B4C-PG25WH**	CAM-94635
IZM67	2000	55	**IZM67B3C-PG20WH**	CAM-94624	**IZM67B4C-PG20WH**	CAM-94636
	2500	55	**IZM67B3C-PG25WH**	CAM-94625	**IZM67B4C-PG25WH**	CAM-94637
	3200	55	**IZM67B3C-PG32WH**	CAM-94626	**IZM67B4C-PG32WH**	CAM-94638
	4000	55	**IZM67B3C-PG40WH**	CAM-94627	**IZM67B4C-PG40WH**	CAM-94639
	4000	55	**IZM67B3C-PG40WV**	CAM-96178	**IZM67B4C-PG40WV**	CAM-96179
Power mode LSI						
IZM65	400	66	**IZM65N3C-P04WH**	CAM-94496	**IZM65N4C-P04WH**	CAM-94508
	630	66	**IZM65N3C-P06WH**	CAM-94497	**IZM65N4C-P06WH**	CAM-94509
	800	66	**IZM65N3C-P08WH**	CAM-94498	**IZM65N4C-P08WH**	CAM-94510
	1000	66	**IZM65N3C-P10WH**	CAM-94499	**IZM65N4C-P10WH**	CAM-94511
	1250	66	**IZM65N3C-P12WH**	CAM-94500	**IZM65N4C-P12WH**	CAM-94512
	1600	66	**IZM65N3C-P16WH**	CAM-94501	**IZM65N4C-P16WH**	CAM-94513
	2000	66	**IZM65N3C-P20WH**	CAM-94502	**IZM65N4C-P20WH**	CAM-94514
	2500	66	**IZM65N3C-P25WH**	CAM-94503	**IZM65N4C-P25WH**	CAM-94515
IZM67	2000	66	**IZM67N3C-P20WH**	CAM-94504	**IZM67N4C-P20WH**	CAM-94516
	2500	66	**IZM67N3C-P25WH**	CAM-94505	**IZM67N4C-P25WH**	CAM-94517
	3200	66	**IZM67N3C-P32WH**	CAM-94506	**IZM67N4C-P32WH**	CAM-94518
	4000	66	**IZM67N3C-P40WH**	CAM-94507	**IZM67N4C-P40WH**	CAM-94519
	4000	66	**IZM67N3C-P40WV**	CAM-96168	**IZM67N4C-P40WV**	CAM-96169
Power mode LSIG						
IZM65	400	66	**IZM65N3C-PG04WH**	CAM-94520	**IZM65N4C-PG04WH**	CAM-94532
	630	66	**IZM65N3C-PG06WH**	CAM-94521	**IZM65N4C-PG06WH**	CAM-94533
	800	66	**IZM65N3C-PG08WH**	CAM-94522	**IZM65N4C-PG08WH**	CAM-94534
	1000	66	**IZM65N3C-PG10WH**	CAM-94523	**IZM65N4C-PG10WH**	CAM-94535
	1250	66	**IZM65N3C-PG12WH**	CAM-94524	**IZM65N4C-PG12WH**	CAM-94536
	1600	66	**IZM65N3C-PG16WH**	CAM-94525	**IZM65N4C-PG16WH**	CAM-94537
	2000	66	**IZM65N3C-PG20WH**	CAM-94526	**IZM65N4C-PG20WH**	CAM-94538
	2500	66	**IZM65N3C-PG25WH**	CAM-94527	**IZM65N4C-PG25WH**	CAM-94539
IZM67	2000	66	**IZM67N3C-PG20WH**	CAM-94528	**IZM67N4C-PG20WH**	CAM-94540
	2500	66	**IZM67N3C-PG25WH**	CAM-94529	**IZM67N4C-PG25WH**	CAM-94541
	3200	66	**IZM67N3C-PG32WH**	CAM-94530	**IZM67N4C-PG32WH**	CAM-94542
	4000	66	**IZM67N3C-PG40WH**	CAM-94531	**IZM67N4C-PG40WH**	CAM-94543
	4000	66	**IZM67N3C-PG40WV**	CAM-96170	**IZM67N4C-PG40WV**	CAM-96171

PT25 Trip Unit Supplied as Standard - Power Mode (LCD), Withdrawable Type

Power mode LSI			3P		4P	
Frame	**Rated current I_n (A)**	**Switching capacity I_{cu} (kA @690V AC)**	**Part No.**	**Article No.**	**Part No.**	**Article No.**
IZM67	2000	85	**IZM67S3C-P20WH**	CAM-93314	**IZM67S4C-P20WH**	CAM-93318
	2500	85	**IZM67S3C-P25WH**	CAM-93315	**IZM67S4C-P25WH**	CAM-93319
	3200	85	**IZM67S3C-P32WH**	CAM-93316	**IZM67S4C-P32WH**	CAM-93320
	4000	85	**IZM67S3C-P40WH**	CAM-93317	**IZM67S4C-P40WH**	CAM-93321
	4000	85	**IZM67S3C-P40WV**	CAM-93522	**IZM67S4C-P40WV**	CAM-93523
Power mode LSIG						
IZM67	2000	85	**IZM67S3C-PG20WH**	CAM-93322	**IZM67S4C-PG20WH**	CAM-93326
	2500	85	**IZM67S3C-PG25WH**	CAM-93323	**IZM67S4C-PG25WH**	CAM-93327
	3200	85	**IZM67S3C-PG32WH**	CAM-93324	**IZM67S4C-PG32WH**	CAM-93328
	4000	85	**IZM67S3C-PG40WH**	CAM-93325	**IZM67S4C-PG40WH**	CAM-93329
	4000	85	**IZM67S3C-PG40WV**	CAM-93524	**IZM67S4C-PG40WV**	CAM-93525

IZM6 Series Air Circuit Breakers

Ordering Description

Devices supplied as standard:

Fixed circuit breaker's basic device, shunt release (220V AC), closing release (220V AC), motor operator (220V AC), auxiliary contact(4CO), PT intelligent trip unit, over current trip switch OTS (1CO), door escutcheon, wiring terminal, 220V AC to DC24V power module, arc distinguishing cover, and handle.

PT20 Trip Unit Supplied as Standard - Current mode (LCD), Fixed Type

Current mode LSI			3P		4P	
Frame	**Rated current I_n (A)**	**Switching capacity I_{cu} (kA @690V AC)**	**Part No.**	**Article No.**	**Part No.**	**Article No.**
IZM65	400	55	**IZM65B3C-A04FH**	CAM-94288	**IZM65B4C-A04FH**	CAM-94300
	630	55	**IZM65B3C-A06FH**	CAM-94289	**IZM65B4C-A06FH**	CAM-94301
	800	55	**IZM65B3C-A08FH**	CAM-94290	**IZM65B4C-A08FH**	CAM-94302
	1000	55	**IZM65B3C-A10FH**	CAM-94291	**IZM65B4C-A10FH**	CAM-94303
	1250	55	**IZM65B3C-A12FH**	CAM-94292	**IZM65B4C-A12FH**	CAM-94304
	1600	55	**IZM65B3C-A16FH**	CAM-94293	**IZM65B4C-A16FH**	CAM-94305
	2000	55	**IZM65B3C-A20FH**	CAM-94294	**IZM65B4C-A20FH**	CAM-94306
	2500	55	**IZM65B3C-A25FH**	CAM-94295	**IZM65B4C-A25FH**	CAM-94307
IZM67	2000	55	**IZM67B3C-A20FH**	CAM-94296	**IZM67B4C-A20FH**	CAM-94308
	2500	55	**IZM67B3C-A25FH**	CAM-94297	**IZM67B4C-A25FH**	CAM-94309
	3200	55	**IZM67B3C-A32FH**	CAM-94298	**IZM67B4C-A32FH**	CAM-94310
	4000	55	**IZM67B3C-A40FH**	CAM-94299	**IZM67B4C-A40FH**	CAM-94311
	4000	55	**IZM67B3C-A40FV**	CAM-96160	**IZM67B4C-A40FV**	CAM-96161
Current mode LSIG						
IZM65	400	55	**IZM65B3C-AG04FH**	CAM-94312	**IZM65B4C-AG04FH**	CAM-94324
	630	55	**IZM65B3C-AG06FH**	CAM-94313	**IZM65B4C-AG06FH**	CAM-94325
	800	55	**IZM65B3C-AG08FH**	CAM-94314	**IZM65B4C-AG08FH**	CAM-94326
	1000	55	**IZM65B3C-AG10FH**	CAM-94315	**IZM65B4C-AG10FH**	CAM-94327
	1250	55	**IZM65B3C-AG12FH**	CAM-94316	**IZM65B4C-AG12FH**	CAM-94328
	1600	55	**IZM65B3C-AG16FH**	CAM-94317	**IZM65B4C-AG16FH**	CAM-94329
	2000	55	**IZM65B3C-AG20FH**	CAM-94318	**IZM65B4C-AG20FH**	CAM-94330
	2500	55	**IZM65B3C-AG25FH**	CAM-94319	**IZM65B4C-AG25FH**	CAM-94331
IZM67	2000	55	**IZM67B3C-AG20FH**	CAM-94320	**IZM67B4C-AG20FH**	CAM-94332
	2500	55	**IZM67B3C-AG25FH**	CAM-94321	**IZM67B4C-AG25FH**	CAM-94333
	3200	55	**IZM67B3C-AG32FH**	CAM-94322	**IZM67B4C-AG32FH**	CAM-94334
	4000	55	**IZM67B3C-AG40FH**	CAM-94323	**IZM67B4C-AG40FH**	CAM-94335
	4000	55	**IZM67B3C-AG40FV**	CAM-96162	**IZM67B4C-AG40FV**	CAM-96163
Current mode LSI + communication						
IZM65	400	55	**IZM65B3C-AC04FH**	CAM-94336	**IZM65B4C-AC04FH**	CAM-94348
	630	55	**IZM65B3C-AC06FH**	CAM-94337	**IZM65B4C-AC06FH**	CAM-94349
	800	55	**IZM65B3C-AC08FH**	CAM-94338	**IZM65B4C-AC08FH**	CAM-94350
	1000	55	**IZM65B3C-AC10FH**	CAM-94339	**IZM65B4C-AC10FH**	CAM-94351
	1250	55	**IZM65B3C-AC12FH**	CAM-94340	**IZM65B4C-AC12FH**	CAM-94352
	1600	55	**IZM65B3C-AC16FH**	CAM-94341	**IZM65B4C-AC16FH**	CAM-94353
	2000	55	**IZM65B3C-AC20FH**	CAM-94342	**IZM65B4C-AC20FH**	CAM-94354
	2500	55	**IZM65B3C-AC25FH**	CAM-94343	**IZM65B4C-AC25FH**	CAM-94355
IZM67	2000	55	**IZM67B3C-AC20FH**	CAM-94344	**IZM67B4C-AC20FH**	CAM-94356
	2500	55	**IZM67B3C-AC25FH**	CAM-94345	**IZM67B4C-AC25FH**	CAM-94357
	3200	55	**IZM67B3C-AC32FH**	CAM-94346	**IZM67B4C-AC32FH**	CAM-94358
	4000	55	**IZM67B3C-AC40FH**	CAM-94347	**IZM67B4C-AC40FH**	CAM-94359
	4000	55	**IZM67B3C-AC40FV**	CAM-96164	**IZM67B4C-AC40FV**	CAM-96165
Current mode LSIG + communication						
IZM65	400	55	**IZM65B3C-AGC04FH**	CAM-94360	**IZM65B4C-AGC04FH**	CAM-94372
	630	55	**IZM65B3C-AGC06FH**	CAM-94361	**IZM65B4C-AGC06FH**	CAM-94373
	800	55	**IZM65B3C-AGC08FH**	CAM-94362	**IZM65B4C-AGC08FH**	CAM-94374
	1000	55	**IZM65B3C-AGC10FH**	CAM-94363	**IZM65B4C-AGC10FH**	CAM-94375
	1250	55	**IZM65B3C-AGC12FH**	CAM-94364	**IZM65B4C-AGC12FH**	CAM-94376
	1600	55	**IZM65B3C-AGC16FH**	CAM-94365	**IZM65B4C-AGC16FH**	CAM-94377
	2000	55	**IZM65B3C-AGC20FH**	CAM-94366	**IZM65B4C-AGC20FH**	CAM-94378
	2500	55	**IZM65B3C-AGC25FH**	CAM-94367	**IZM65B4C-AGC25FH**	CAM-94379
IZM67	2000	55	**IZM67B3C-AGC20FH**	CAM-94368	**IZM67B4C-AGC20FH**	CAM-94380
	2500	55	**IZM67B3C-AGC25FH**	CAM-94369	**IZM67B4C-AGC25FH**	CAM-94381
	3200	55	**IZM67B3C-AGC32FH**	CAM-94370	**IZM67B4C-AGC32FH**	CAM-94382
	4000	55	**IZM67B3C-AGC40FH**	CAM-94371	**IZM67B4C-AGC40FH**	CAM-94383
	4000	55	**IZM67B3C-AGC40FV**	CAM-96166	**IZM67B4C-AGC40FV**	CAM-96167

Devices supplied as standard:

Fixed circuit breaker's basic device, shunt release (220V AC), closing release (220V AC), motor operator (220V AC), auxiliary contact(4CO), PT intelligent trip unit, over current trip switch OTS (1CO), door escutcheon, wiring terminal, 220V AC to DC24V power module, arc distinguishing cover, and handle.

PT20 Trip Unit Supplied as Standard - Current mode (LCD), Fixed Type

Current mode LSI			3P		4P	
Frame	**Rated current I_n (A)**	**Switching capacity I_{cu} (kA @690V AC)**	**Part No.**	**Article No.**	**Part No.**	**Article No.**
IZM65	400	66	**IZM65N3C-A04FH**	CAM-94096	**IZM65N4C-A04FH**	CAM-94108
	630	66	**IZM65N3C-A06FH**	CAM-94097	**IZM65N4C-A06FH**	CAM-94109
	800	66	**IZM65N3C-A08FH**	CAM-94098	**IZM65N4C-A08FH**	CAM-94110
	1000	66	**IZM65N3C-A10FH**	CAM-94099	**IZM65N4C-A10FH**	CAM-94111
	1250	66	**IZM65N3C-A12FH**	CAM-94100	**IZM65N4C-A12FH**	CAM-94112
	1600	66	**IZM65N3C-A16FH**	CAM-94101	**IZM65N4C-A16FH**	CAM-94113
	2000	66	**IZM65N3C-A20FH**	CAM-94102	**IZM65N4C-A20FH**	CAM-94114
	2500	66	**IZM65N3C-A25FH**	CAM-94103	**IZM65N4C-A25FH**	CAM-94115
IZM67	2000	66	**IZM67N3C-A20FH**	CAM-94104	**IZM67N4C-A20FH**	CAM-94116
	2500	66	**IZM67N3C-A25FH**	CAM-94105	**IZM67N4C-A25FH**	CAM-94117
	3200	66	**IZM67N3C-A32FH**	CAM-94106	**IZM67N4C-A32FH**	CAM-94118
	4000	66	**IZM67N3C-A40FH**	CAM-94107	**IZM67N4C-A40FH**	CAM-94119
	4000	66	**IZM67N3C-A40FV**	CAM-96144	**IZM67N4C-A40FV**	CAM-96145
Current mode LSIG						
IZM65	400	66	**IZM65N3C-AG04FH**	CAM-94120	**IZM65N4C-AG04FH**	CAM-94132
	630	66	**IZM65N3C-AG06FH**	CAM-94121	**IZM65N4C-AG06FH**	CAM-94133
	800	66	**IZM65N3C-AG08FH**	CAM-94122	**IZM65N4C-AG08FH**	CAM-94134
	1000	66	**IZM65N3C-AG10FH**	CAM-94123	**IZM65N4C-AG10FH**	CAM-94135
	1250	66	**IZM65N3C-AG12FH**	CAM-94124	**IZM65N4C-AG12FH**	CAM-94136
	1600	66	**IZM65N3C-AG16FH**	CAM-94125	**IZM65N4C-AG16FH**	CAM-94137
	2000	66	**IZM65N3C-AG20FH**	CAM-94126	**IZM65N4C-AG20FH**	CAM-94138
	2500	66	**IZM65N3C-AG25FH**	CAM-94127	**IZM65N4C-AG25FH**	CAM-94139
IZM67	2000	66	**IZM67N3C-AG20FH**	CAM-94128	**IZM67N4C-AG20FH**	CAM-94140
	2500	66	**IZM67N3C-AG25FH**	CAM-94129	**IZM67N4C-AG25FH**	CAM-94141
	3200	66	**IZM67N3C-AG32FH**	CAM-94130	**IZM67N4C-AG32FH**	CAM-94142
	4000	66	**IZM67N3C-AG40FH**	CAM-94131	**IZM67N4C-AG40FH**	CAM-94143
	4000	66	**IZM67N3C-AG40FV**	CAM-96146	**IZM67N4C-AG40FV**	CAM-96147
Current mode LSI + communication						
IZM65	400	66	**IZM65N3C-AC04FH**	CAM-94144	**IZM65N4C-AC04FH**	CAM-94156
	630	66	**IZM65N3C-AC06FH**	CAM-94145	**IZM65N4C-AC06FH**	CAM-94157
	800	66	**IZM65N3C-AC08FH**	CAM-94146	**IZM65N4C-AC08FH**	CAM-94158
	1000	66	**IZM65N3C-AC10FH**	CAM-94147	**IZM65N4C-AC10FH**	CAM-94159
	1250	66	**IZM65N3C-AC12FH**	CAM-94148	**IZM65N4C-AC12FH**	CAM-94160
	1600	66	**IZM65N3C-AC16FH**	CAM-94149	**IZM65N4C-AC16FH**	CAM-94161
	2000	66	**IZM65N3C-AC20FH**	CAM-94150	**IZM65N4C-AC20FH**	CAM-94162
	2500	66	**IZM65N3C-AC25FH**	CAM-94151	**IZM65N4C-AC25FH**	CAM-94163
IZM67	2000	66	**IZM67N3C-AC20FH**	CAM-94152	**IZM67N4C-AC20FH**	CAM-94164
	2500	66	**IZM67N3C-AC25FH**	CAM-94153	**IZM67N4C-AC25FH**	CAM-94165
	3200	66	**IZM67N3C-AC32FH**	CAM-94154	**IZM67N4C-AC32FH**	CAM-94166
	4000	66	**IZM67N3C-AC40FH**	CAM-94155	**IZM67N4C-AC40FH**	CAM-94167
	4000	66	**IZM67N3C-AC40FV**	CAM-96148	**IZM67N4C-AC40FV**	CAM-96149
Current mode LSIG + communication						
IZM65	400	66	**IZM65N3C-AGC04FH**	CAM-94168	**IZM65N4C-AGC04FH**	CAM-94180
	630	66	**IZM65N3C-AGC06FH**	CAM-94169	**IZM65N4C-AGC06FH**	CAM-94181
	800	66	**IZM65N3C-AGC08FH**	CAM-94170	**IZM65N4C-AGC08FH**	CAM-94182
	1000	66	**IZM65N3C-AGC10FH**	CAM-94171	**IZM65N4C-AGC10FH**	CAM-94183
	1250	66	**IZM65N3C-AGC12FH**	CAM-94172	**IZM65N4C-AGC12FH**	CAM-94184
	1600	66	**IZM65N3C-AGC16FH**	CAM-94173	**IZM65N4C-AGC16FH**	CAM-94185
	2000	66	**IZM65N3C-AGC20FH**	CAM-94174	**IZM65N4C-AGC20FH**	CAM-94186
	2500	66	**IZM65N3C-AGC25FH**	CAM-94175	**IZM65N4C-AGC25FH**	CAM-94187
IZM67	2000	66	**IZM67N3C-AGC20FH**	CAM-94176	**IZM67N4C-AGC20FH**	CAM-94188
	2500	66	**IZM67N3C-AGC25FH**	CAM-94177	**IZM67N4C-AGC25FH**	CAM-94189
	3200	66	**IZM67N3C-AGC32FH**	CAM-94178	**IZM67N4C-AGC32FH**	CAM-94190
	4000	66	**IZM67N3C-AGC40FH**	CAM-94179	**IZM67N4C-AGC40FH**	CAM-94191
	4000	66	**IZM67N3C-AGC40FV**	CAM-96150	**IZM67N4C-AGC40FV**	CAM-96151

IZM6 Series Air Circuit Breakers

Ordering Description

Devices supplied as standard:

Fixed circuit breaker's basic device, shunt release (220V AC), closing release (220V AC), motor operator (220V AC), auxiliary contact(4CO), PT intelligent trip unit, over current trip switch OTS (1CO), door escutcheon, wiring terminal, 220V AC to DC24V power module, arc distinguishing cover, and handle.

PT20 Trip Unit Supplied as Standard - Current mode (LCD), Fixed Type

Current mode LSI			3P		4P	
Frame	**Rated current I_n (A)**	**Switching capacity I_{cu} (kA @690V AC)**	**Part No.**	**Article No.**	**Part No.**	**Article No.**
IZM67	2000	85	**IZM67S3C-A20FH**	CAM-93282	**IZM67S4C-A20FH**	CAM-93286
	2500	85	**IZM67S3C-A25FH**	CAM-93283	**IZM67S4C-A25FH**	CAM-93287
	3200	85	**IZM67S3C-A32FH**	CAM-93284	**IZM67S4C-A32FH**	CAM-93288
	4000	85	**IZM67S3C-A40FH**	CAM-93285	**IZM67S4C-A40FH**	CAM-93289
	4000	85	**IZM67S3C-A40FV**	CAM-93514	**IZM67S4C-A40FV**	CAM-93515
Current mode LSIG						
IZM67	2000	85	**IZM67S3C-AG20FH**	CAM-93290	**IZM67S4C-AG20FH**	CAM-93294
	2500	85	**IZM67S3C-AG25FH**	CAM-93291	**IZM67S4C-AG25FH**	CAM-93295
	3200	85	**IZM67S3C-AG32FH**	CAM-93292	**IZM67S4C-AG32FH**	CAM-93296
	4000	85	**IZM67S3C-AG40FH**	CAM-93293	**IZM67S4C-AG40FH**	CAM-93297
			IZM67S3C-AG40FV	CAM-93516	**IZM67S4C-AG40FV**	CAM-93517
Current mode LSI + communication						
IZM67	2000	85	**IZM67S3C-AC20FH**	CAM-93298	**IZM67S4C-AC20FH**	CAM-93302
	2500	85	**IZM67S3C-AC25FH**	CAM-93299	**IZM67S4C-AC25FH**	CAM-93303
	3200	85	**IZM67S3C-AC32FH**	CAM-93300	**IZM67S4C-AC32FH**	CAM-93304
	4000	85	**IZM67S3C-AC40FH**	CAM-93301	**IZM67S4C-AC40FH**	CAM-93305
	4000	85	**IZM67S3C-AC40FV**	CAM-93518	**IZM67S4C-AC40FV**	CAM-93519
Current mode LSIG + communication						
IZM67	2000	85	**IZM67S3C-AGC20FH**	CAM-93306	**IZM67S4C-AGC20FH**	CAM-93310
	2500	85	**IZM67S3C-AGC25FH**	CAM-93307	**IZM67S4C-AGC25FH**	CAM-93311
	3200	85	**IZM67S3C-AGC32FH**	CAM-93308	**IZM67S4C-AGC32FH**	CAM-93312
	4000	85	**IZM67S3C-AGC40FH**	CAM-93309	**IZM67S4C-AGC40FH**	CAM-93313
	4000	85	**IZM67S3C-AGC40FV**	CAM-93520	**IZM67S4C-AGC40FV**	CAM-93521

Devices supplied as standard:

Fixed circuit breaker's basic device, shunt release (220V AC), closing release (220V AC), motor operator (220V AC), auxiliary contact(4CO), PT intelligent trip unit, over current trip switch OTS (1CO), door escutcheon, wiring terminal, 220V AC to DC24V power module, arc distinguishing cover, and handle.

PT25 Trip Unit Supplied as Standard - Power Mode (LCD), Fixed Type

Power mode LSI			3P		4P	
Frame	**Rated current I_n (A)**	**Switching capacity I_{cu} (kA @690V AC)**	**Part No.**	**Article No.**	**Part No.**	**Article No.**
IZM65	400	55	**IZM65B3C-P04FH**	CAM-94640	**IZM65B4C-P04FH**	CAM-94652
	630	55	**IZM65B3C-P06FH**	CAM-94641	**IZM65B4C-P06FH**	CAM-94653
	800	55	**IZM65B3C-P08FH**	CAM-94642	**IZM65B4C-P08FH**	CAM-94654
	1000	55	**IZM65B3C-P10FH**	CAM-94643	**IZM65B4C-P10FH**	CAM-94655
	1250	55	**IZM65B3C-P12FH**	CAM-94644	**IZM65B4C-P12FH**	CAM-94656
	1600	55	**IZM65B3C-P16FH**	CAM-94645	**IZM65B4C-P16FH**	CAM-94657
	2000	55	**IZM65B3C-P20FH**	CAM-94646	**IZM65B4C-P20FH**	CAM-94658
	2500	55	**IZM65B3C-P25FH**	CAM-94647	**IZM65B4C-P25FH**	CAM-94659
IZM67	2000	55	**IZM67B3C-P20FH**	CAM-94648	**IZM67B4C-P20FH**	CAM-94660
	2500	55	**IZM67B3C-P25FH**	CAM-94649	**IZM67B4C-P25FH**	CAM-94661
	3200	55	**IZM67B3C-P32FH**	CAM-94650	**IZM67B4C-P32FH**	CAM-94662
	4000	55	**IZM67B3C-P40FH**	CAM-94651	**IZM67B4C-P40FH**	CAM-94663
	4000	55	**IZM67B3C-P40FV**	CAM-96180	**IZM67B4C-P40FV**	CAM-96181
Power mode LSIG						
IZM65	400	55	**IZM65B3C-PG04FH**	CAM-94664	**IZM65B4C-PG04FH**	CAM-94676
	630	55	**IZM65B3C-PG06FH**	CAM-94665	**IZM65B4C-PG06FH**	CAM-94677
	800	55	**IZM65B3C-PG08FH**	CAM-94666	**IZM65B4C-PG08FH**	CAM-94678
	1000	55	**IZM65B3C-PG10FH**	CAM-94667	**IZM65B4C-PG10FH**	CAM-94679
	1250	55	**IZM65B3C-PG12FH**	CAM-94668	**IZM65B4C-PG12FH**	CAM-94680
	1600	55	**IZM65B3C-PG16FH**	CAM-94669	**IZM65B4C-PG16FH**	CAM-94681
	2000	55	**IZM65B3C-PG20FH**	CAM-94670	**IZM65B4C-PG20FH**	CAM-94682
	2500	55	**IZM65B3C-PG25FH**	CAM-94671	**IZM65B4C-PG25FH**	CAM-94683
IZM67	2000	55	**IZM67B3C-PG20FH**	CAM-94672	**IZM67B4C-PG20FH**	CAM-94684
	2500	55	**IZM67B3C-PG25FH**	CAM-94673	**IZM67B4C-PG25FH**	CAM-94685
	3200	55	**IZM67B3C-PG32FH**	CAM-94674	**IZM67B4C-PG32FH**	CAM-94686
	4000	55	**IZM67B3C-PG40FH**	CAM-94675	**IZM67B4C-PG40FH**	CAM-94687
	4000	55	**IZM67B3C-PG40FV**	CAM-96182	**IZM67B4C-PG40FV**	CAM-96183
Power mode LSI						
IZM65	400	66	**IZM65N3C-P04FH**	CAM-94544	**IZM65N4C-P04FH**	CAM-94556
	630	66	**IZM65N3C-P06FH**	CAM-94545	**IZM65N4C-P06FH**	CAM-94557
	800	66	**IZM65N3C-P08FH**	CAM-94546	**IZM65N4C-P08FH**	CAM-94558
	1000	66	**IZM65N3C-P10FH**	CAM-94547	**IZM65N4C-P10FH**	CAM-94559
	1250	66	**IZM65N3C-P12FH**	CAM-94548	**IZM65N4C-P12FH**	CAM-94560
	1600	66	**IZM65N3C-P16FH**	CAM-94549	**IZM65N4C-P16FH**	CAM-94561
	2000	66	**IZM65N3C-P20FH**	CAM-94550	**IZM65N4C-P20FH**	CAM-94562
	2500	66	**IZM65N3C-P25FH**	CAM-94551	**IZM65N4C-P25FH**	CAM-94563
IZM67	2000	66	**IZM67N3C-P20FH**	CAM-94552	**IZM67N4C-P20FH**	CAM-94564
	2500	66	**IZM67N3C-P25FH**	CAM-94553	**IZM67N4C-P25FH**	CAM-94565
	3200	66	**IZM67N3C-P32FH**	CAM-94554	**IZM67N4C-P32FH**	CAM-94566
	4000	66	**IZM67N3C-P40FH**	CAM-94555	**IZM67N4C-P40FH**	CAM-94567
	4000	66	**IZM67N3C-P40FV**	CAM-96172	**IZM67N4C-P40FV**	CAM-96173
Power mode LSIG						
IZM65	400	66	**IZM65N3C-PG04FH**	CAM-94568	**IZM65N4C-PG04FH**	CAM-94580
	630	66	**IZM65N3C-PG06FH**	CAM-94569	**IZM65N4C-PG06FH**	CAM-94581
	800	66	**IZM65N3C-PG08FH**	CAM-94570	**IZM65N4C-PG08FH**	CAM-94582
	1000	66	**IZM65N3C-PG10FH**	CAM-94571	**IZM65N4C-PG10FH**	CAM-94583
	1250	66	**IZM65N3C-PG12FH**	CAM-94572	**IZM65N4C-PG12FH**	CAM-94584
	1600	66	**IZM65N3C-PG16FH**	CAM-94573	**IZM65N4C-PG16FH**	CAM-94585
	2000	66	**IZM65N3C-PG20FH**	CAM-94574	**IZM65N4C-PG20FH**	CAM-94586
	2500	66	**IZM65N3C-PG25FH**	CAM-94575	**IZM65N4C-PG25FH**	CAM-94587
IZM67	2000	66	**IZM67N3C-PG20FH**	CAM-94576	**IZM67N4C-PG20FH**	CAM-94588
	2500	66	**IZM67N3C-PG25FH**	CAM-94577	**IZM67N4C-PG25FH**	CAM-94589
	3200	66	**IZM67N3C-PG32FH**	CAM-94578	**IZM67N4C-PG32FH**	CAM-94590
	4000	66	**IZM67N3C-PG40FH**	CAM-94579	**IZM67N4C-PG40FH**	CAM-94591
	4000	66	**IZM67N3C-PG40FV**	CAM-96174	**IZM67N4C-PG40FV**	CAM-96175

PT25 Trip Unit Supplied as Standard - Power Mode (LCD), Fixed Type

Power mode LSI			3P		4P	
Frame	**Rated current I_n (A)**	**Switching capacity I_{cu} (kA @690V AC)**	**Part No.**	**Article No.**	**Part No.**	**Article No.**
IZM67	2000	85	**IZM67S3C-P20FH**	CAM-93330	**IZM67S4C-P20FH**	CAM-93334
	2500	85	**IZM67S3C-P25FH**	CAM-93331	**IZM67S4C-P25FH**	CAM-93335
	3200	85	**IZM67S3C-P32FH**	CAM-93332	**IZM67S4C-P32FH**	CAM-93336
	4000	85	**IZM67S3C-P40FH**	CAM-93333	**IZM67S4C-P40FH**	CAM-93337
	4000	85	**IZM67S3C-P40FV**	CAM-93526	**IZM67S4C-P40FV**	CAM-93527
Power mode LSIG						
IZM67	2000	85	**IZM67S3C-PG20FH**	CAM-93338	**IZM67S4C-PG20FH**	CAM-93342
	2500	85	**IZM67S3C-PG25FH**	CAM-93339	**IZM67S4C-PG25FH**	CAM-93343
	3200	85	**IZM67S3C-PG32FH**	CAM-93340	**IZM67S4C-PG32FH**	CAM-93344
	4000	85	**IZM67S3C-PG40FH**	CAM-93341	**IZM67S4C-PG40FH**	CAM-93345
	4000	85	**IZM67S3C-PG40FV**	CAM-93528	**IZM67S4C-PG40FV**	CAM-93529

Devices supplied as standard:

Withdrawable circuit breaker's basic device, cassette, shunt release (220V AC), closing release (220V AC), motor operator (220V AC), auxiliary contact (4CO), PT intelligent trip unit, overcurrent trip switch OTS (1CO), door escutcheon, wiring terminal, 220V AC to DC24V power module, safety shutter, arc distinguishing cover, and handle.

PT10 Trip Unit Supplied as Standard - Current mode (Rotary Switch), Withdrawable Type

Current mode LSI			3P		4P	
Frame	**Rated current I_n (A)**	**Switching capacity I_{cu} (kA @690V AC)**	**Part No.**	**Article No.**	**Part No.**	**Article No.**
IZM65	400	55	**IZM65B3C-D04WH**	CAM-94840	**IZM65B4C-D04WH**	CAM-94852
	630	55	**IZM65B3C-D06WH**	CAM-94841	**IZM65B4C-D06WH**	CAM-94853
	800	55	**IZM65B3C-D08WH**	CAM-94842	**IZM65B4C-D08WH**	CAM-94854
	1000	55	**IZM65B3C-D10WH**	CAM-94843	**IZM65B4C-D10WH**	CAM-94855
	1250	55	**IZM65B3C-D12WH**	CAM-94844	**IZM65B4C-D12WH**	CAM-94856
	1600	55	**IZM65B3C-D16WH**	CAM-94845	**IZM65B4C-D16WH**	CAM-94857
	2000	55	**IZM65B3C-D20WH**	CAM-94846	**IZM65B4C-D20WH**	CAM-94858
	2500	55	**IZM65B3C-D25WH**	CAM-94847	**IZM65B4C-D25WH**	CAM-94859
IZM67	2000	55	**IZM67B3C-D20WH**	CAM-94848	**IZM67B4C-D20WH**	CAM-94860
	2500	55	**IZM67B3C-D25WH**	CAM-94849	**IZM67B4C-D25WH**	CAM-94861
	3200	55	**IZM67B3C-D32WH**	CAM-94850	**IZM67B4C-D32WH**	CAM-94862
	4000	55	**IZM67B3C-D40WH**	CAM-94851	**IZM67B4C-D40WH**	CAM-94863
	4000	55	**IZM67B3C-D40WV**	CAM-96192	**IZM67B4C-D40WV**	CAM-96193
Current mode LSIG						
IZM65	400	55	**IZM65B3C-DG04WH**	CAM-94864	**IZM65B4C-DG04WH**	CAM-94876
	630	55	**IZM65B3C-DG06WH**	CAM-94865	**IZM65B4C-DG06WH**	CAM-94877
	800	55	**IZM65B3C-DG08WH**	CAM-94866	**IZM65B4C-DG08WH**	CAM-94878
	1000	55	**IZM65B3C-DG10WH**	CAM-94867	**IZM65B4C-DG10WH**	CAM-94879
	1250	55	**IZM65B3C-DG12WH**	CAM-94868	**IZM65B4C-DG12WH**	CAM-94880
	1600	55	**IZM65B3C-DG16WH**	CAM-94869	**IZM65B4C-DG16WH**	CAM-94881
	2000	55	**IZM65B3C-DG20WH**	CAM-94870	**IZM65B4C-DG20WH**	CAM-94882
	2500	55	**IZM65B3C-DG25WH**	CAM-94871	**IZM65B4C-DG25WH**	CAM-94883
IZM67	2000	55	**IZM67B3C-DG20WH**	CAM-94872	**IZM67B4C-DG20WH**	CAM-94884
	2500	55	**IZM67B3C-DG25WH**	CAM-94873	**IZM67B4C-DG25WH**	CAM-94885
	3200	55	**IZM67B3C-DG32WH**	CAM-94874	**IZM67B4C-DG32WH**	CAM-94886
	4000	55	**IZM67B3C-DG40WH**	CAM-94875	**IZM67B4C-DG40WH**	CAM-94887
	4000	55	**IZM67B3C-DG40WV**	CAM-96194	**IZM67B4C-DG40WV**	CAM-96195
Current mode LSI						
IZM65	400	66	**IZM65N3C-D04WH**	CAM-94744	**IZM65N4C-D04WH**	CAM-94756
	630	66	**IZM65N3C-D06WH**	CAM-94745	**IZM65N4C-D06WH**	CAM-94757
	800	66	**IZM65N3C-D08WH**	CAM-94746	**IZM65N4C-D08WH**	CAM-94758
	1000	66	**IZM65N3C-D10WH**	CAM-94747	**IZM65N4C-D10WH**	CAM-94759
	1250	66	**IZM65N3C-D12WH**	CAM-94748	**IZM65N4C-D12WH**	CAM-94760
	1600	66	**IZM65N3C-D16WH**	CAM-94749	**IZM65N4C-D16WH**	CAM-94761
	2000	66	**IZM65N3C-D20WH**	CAM-94750	**IZM65N4C-D20WH**	CAM-94762
	2500	66	**IZM65N3C-D25WH**	CAM-94751	**IZM65N4C-D25WH**	CAM-94763
IZM67	2000	66	**IZM67N3C-D20WH**	CAM-94752	**IZM67N4C-D20WH**	CAM-94764
	2500	66	**IZM67N3C-D25WH**	CAM-94753	**IZM67N4C-D25WH**	CAM-94765
	3200	66	**IZM67N3C-D32WH**	CAM-94754	**IZM67N4C-D32WH**	CAM-94766
	4000	66	**IZM67N3C-D40WH**	CAM-94755	**IZM67N4C-D40WH**	CAM-94767
	4000	66	**IZM67N3C-D40WV**	CAM-96184	**IZM67N4C-D40WV**	CAM-96185
Current mode LSIG						
IZM65	400	66	**IZM65N3C-DG04WH**	CAM-94768	**IZM65N4C-DG04WH**	CAM-94780
	630	66	**IZM65N3C-DG06WH**	CAM-94769	**IZM65N4C-DG06WH**	CAM-94781
	800	66	**IZM65N3C-DG08WH**	CAM-94770	**IZM65N4C-DG08WH**	CAM-94782
	1000	66	**IZM65N3C-DG10WH**	CAM-94771	**IZM65N4C-DG10WH**	CAM-94783
	1250	66	**IZM65N3C-DG12WH**	CAM-94772	**IZM65N4C-DG12WH**	CAM-94784
	1600	66	**IZM65N3C-DG16WH**	CAM-94773	**IZM65N4C-DG16WH**	CAM-94785
	2000	66	**IZM65N3C-DG20WH**	CAM-94774	**IZM65N4C-DG20WH**	CAM-94786
	2500	66	**IZM65N3C-DG25WH**	CAM-94775	**IZM65N4C-DG25WH**	CAM-94787
IZM67	2000	66	**IZM67N3C-DG20WH**	CAM-94776	**IZM67N4C-DG20WH**	CAM-94788
	2500	66	**IZM67N3C-DG25WH**	CAM-94777	**IZM67N4C-DG25WH**	CAM-94789
	3200	66	**IZM67N3C-DG32WH**	CAM-94778	**IZM67N4C-DG32WH**	CAM-94790
	4000	66	**IZM67N3C-DG40WH**	CAM-94779	**IZM67N4C-DG40WH**	CAM-94791
	4000	66	**IZM67N3C-DG40WV**	CAM-96186	**IZM67N4C-DG40WV**	CAM-96187

IZM6 Series Air Circuit Breakers

Ordering Description

PT10 Trip Unit Supplied as Standard - Current mode (Rotary Switch), Withdrawable Type

Current mode LSI			3P		4P	
Frame	**Rated current I_n (A)**	**Switching capacity I_{cu} (kA @690V AC)**	**Part No.**	**Article No.**	**Part No.**	**Article No.**
IZM67	2000	85	**IZM67S3C-D20WH**	CAM-93346	**IZM67S4C-D20WH**	CAM-93350
	2500	85	**IZM67S3C-D25WH**	CAM-93347	**IZM67S4C-D25WH**	CAM-93351
	3200	85	**IZM67S3C-D32WH**	CAM-93348	**IZM67S4C-D32WH**	CAM-93352
	4000	85	**IZM67S3C-D40WH**	CAM-93349	**IZM67S4C-D40WH**	CAM-93353
	4000	85	**IZM67S3C-D40WV**	CAM-93530	**IZM67S4C-D40WV**	CAM-93531
Current mode LSIG						
IZM67	2000	85	**IZM67S3C-DG20WH**	CAM-93354	**IZM67S4C-DG20WH**	CAM-93358
	2500	85	**IZM67S3C-DG25WH**	CAM-93355	**IZM67S4C-DG25WH**	CAM-93359
	3200	85	**IZM67S3C-DG32WH**	CAM-93356	**IZM67S4C-DG32WH**	CAM-93360
	4000	85	**IZM67S3C-DG40WH**	CAM-93357	**IZM67S4C-DG40WH**	CAM-93361
	4000	85	**IZM67S3C-DG40WV**	CAM-93532	**IZM67S4C-DG40WV**	CAM-93533

Devices supplied as standard:

Fixed circuit breaker's basic device, shunt release (220V AC), closing release (220V AC), motor operator (220V AC), auxiliary contact(4CO), PT intelligent trip unit, over current trip switch OTS (1CO), door escutcheon, wiring terminal, 220V AC to DC24V power module, arc distinguishing cover, and handle.

PT10 Trip Unit Supplied as Standard - Current mode (Rotary Switch), Fixed Type

Current mode LSI			3P		4P	
Frame	**Rated current I_n (A)**	**Switching capacity I_{cu} (kA @690V AC)**	**Part No.**	**Article No.**	**Part No.**	**Article No.**
IZM65	400	55	**IZM65B3C-D04FH**	CAM-94888	**IZM65B4C-D04FH**	CAM-94900
	630	55	**IZM65B3C-D06FH**	CAM-94889	**IZM65B4C-D06FH**	CAM-94901
	800	55	**IZM65B3C-D08FH**	CAM-94890	**IZM65B4C-D08FH**	CAM-94902
	1000	55	**IZM65B3C-D10FH**	CAM-94891	**IZM65B4C-D10FH**	CAM-94903
	1250	55	**IZM65B3C-D12FH**	CAM-94892	**IZM65B4C-D12FH**	CAM-94904
	1600	55	**IZM65B3C-D16FH**	CAM-94893	**IZM65B4C-D16FH**	CAM-94905
	2000	55	**IZM65B3C-D20FH**	CAM-94894	**IZM65B4C-D20FH**	CAM-94906
	2500	55	**IZM65B3C-D25FH**	CAM-94895	**IZM65B4C-D25FH**	CAM-94907
IZM67	2000	55	**IZM67B3C-D20FH**	CAM-94896	**IZM67B4C-D20FH**	CAM-94908
	2500	55	**IZM67B3C-D25FH**	CAM-94897	**IZM67B4C-D25FH**	CAM-94909
	3200	55	**IZM67B3C-D32FH**	CAM-94898	**IZM67B4C-D32FH**	CAM-94910
	4000	55	**IZM67B3C-D40FH**	CAM-94899	**IZM67B4C-D40FH**	CAM-94911
	4000	55	**IZM67B3C-D40FV**	CAM-96196	**IZM67B4C-D40FV**	CAM-96197
Current mode LSIG						
IZM65	400	55	**IZM65B3C-DG04FH**	CAM-94912	**IZM65B4C-DG04FH**	CAM-94924
	630	55	**IZM65B3C-DG06FH**	CAM-94913	**IZM65B4C-DG06FH**	CAM-94925
	800	55	**IZM65B3C-DG08FH**	CAM-94914	**IZM65B4C-DG08FH**	CAM-94926
	1000	55	**IZM65B3C-DG10FH**	CAM-94915	**IZM65B4C-DG10FH**	CAM-94927
	1250	55	**IZM65B3C-DG12FH**	CAM-94916	**IZM65B4C-DG12FH**	CAM-94928
	1600	55	**IZM65B3C-DG16FH**	CAM-94917	**IZM65B4C-DG16FH**	CAM-94929
	2000	55	**IZM65B3C-DG20FH**	CAM-94918	**IZM65B4C-DG20FH**	CAM-94930
	2500	55	**IZM65B3C-DG25FH**	CAM-94919	**IZM65B4C-DG25FH**	CAM-94931
IZM67	2000	55	**IZM67B3C-DG20FH**	CAM-94920	**IZM67B4C-DG20FH**	CAM-94932
	2500	55	**IZM67B3C-DG25FH**	CAM-94921	**IZM67B4C-DG25FH**	CAM-94933
	3200	55	**IZM67B3C-DG32FH**	CAM-94922	**IZM67B4C-DG32FH**	CAM-94934
	4000	55	**IZM67B3C-DG40FH**	CAM-94923	**IZM67B4C-DG40FH**	CAM-94935
	4000	55	**IZM67B3C-DG40FV**	CAM-96198	**IZM67B4C-DG40FV**	CAM-96199
Current mode LSI						
IZM65	400	66	**IZM65N3C-D04FH**	CAM-94792	**IZM65N4C-D04FH**	CAM-94804
	630	66	**IZM65N3C-D06FH**	CAM-94793	**IZM65N4C-D06FH**	CAM-94805
	800	66	**IZM65N3C-D08FH**	CAM-94794	**IZM65N4C-D08FH**	CAM-94806
	1000	66	**IZM65N3C-D10FH**	CAM-94795	**IZM65N4C-D10FH**	CAM-94807
	1250	66	**IZM65N3C-D12FH**	CAM-94796	**IZM65N4C-D12FH**	CAM-94808
	1600	66	**IZM65N3C-D16FH**	CAM-94797	**IZM65N4C-D16FH**	CAM-94809
	2000	66	**IZM65N3C-D20FH**	CAM-94798	**IZM65N4C-D20FH**	CAM-94810
	2500	66	**IZM65N3C-D25FH**	CAM-94799	**IZM65N4C-D25FH**	CAM-94811
IZM67	2000	66	**IZM67N3C-D20FH**	CAM-94800	**IZM67N4C-D20FH**	CAM-94812
	2500	66	**IZM67N3C-D25FH**	CAM-94801	**IZM67N4C-D25FH**	CAM-94813
	3200	66	**IZM67N3C-D32FH**	CAM-94802	**IZM67N4C-D32FH**	CAM-94814
	4000	66	**IZM67N3C-D40FH**	CAM-94803	**IZM67N4C-D40FH**	CAM-94815
	4000	66	**IZM67N3C-D40FV**	CAM-96188	**IZM67N4C-D40FV**	CAM-96189
Current mode LSIG						
IZM65	400	66	**IZM65N3C-DG04FH**	CAM-94816	**IZM65N4C-DG04FH**	CAM-94828
	630	66	**IZM65N3C-DG06FH**	CAM-94817	**IZM65N4C-DG06FH**	CAM-94829
	800	66	**IZM65N3C-DG08FH**	CAM-94818	**IZM65N4C-DG08FH**	CAM-94830
	1000	66	**IZM65N3C-DG10FH**	CAM-94819	**IZM65N4C-DG10FH**	CAM-94831
	1250	66	**IZM65N3C-DG12FH**	CAM-94820	**IZM65N4C-DG12FH**	CAM-94832
	1600	66	**IZM65N3C-DG16FH**	CAM-94821	**IZM65N4C-DG16FH**	CAM-94833
	2000	66	**IZM65N3C-DG20FH**	CAM-94822	**IZM65N4C-DG20FH**	CAM-94834
	2500	66	**IZM65N3C-DG25FH**	CAM-94823	**IZM65N4C-DG25FH**	CAM-94835
IZM67	2000	66	**IZM67N3C-DG20FH**	CAM-94824	**IZM67N4C-DG20FH**	CAM-94836
	2500	66	**IZM67N3C-DG25FH**	CAM-94825	**IZM67N4C-DG25FH**	CAM-94837
	3200	66	**IZM67N3C-DG32FH**	CAM-94826	**IZM67N4C-DG32FH**	CAM-94838
	4000	66	**IZM67N3C-DG40FH**	CAM-94827	**IZM67N4C-DG40FH**	CAM-94839
	4000	66	**IZM67N3C-DG40FV**	CAM-96190	**IZM67N4C-DG40FV**	CAM-96191

PT10 Trip Unit Supplied as Standard - Current mode (Rotary Switch), Fixed Type

Current mode LSI			3P		4P	
Frame	**Rated current I_n (A)**	**Switching capacity I_{cu} (kA @690V AC)**	**Part No.**	**Article No.**	**Part No.**	**Article No.**
IZM67	2000	85	**IZM67S3C-D20FH**	CAM-93362	**IZM67S4C-D20FH**	CAM-93366
	2500	85	**IZM67S3C-D25FH**	CAM-93363	**IZM67S4C-D25FH**	CAM-93367
	3200	85	**IZM67S3C-D32FH**	CAM-93364	**IZM67S4C-D32FH**	CAM-93368
	4000	85	**IZM67S3C-D40FH**	CAM-93365	**IZM67S4C-D40FH**	CAM-93369
	4000	85	**IZM67S3C-D40FV**	CAM-93534	**IZM67S4C-D40FV**	CAM-93535
Current mode LSIG						
IZM67	2000	85	**IZM67S3C-DG20FH**	CAM-93370	**IZM67S4C-DG20FH**	CAM-93374
	2500	85	**IZM67S3C-DG25FH**	CAM-93371	**IZM67S4C-DG25FH**	CAM-93375
	3200	85	**IZM67S3C-DG32FH**	CAM-93372	**IZM67S4C-DG32FH**	CAM-93376
	4000	85	**IZM67S3C-DG40FH**	CAM-93373	**IZM67S4C-DG40FH**	CAM-93377
	4000	85	**IZM67S3C-DG40FV**	CAM-93536	**IZM67S4C-DG40FV**	CAM-93537

Devices supplied as standard:

Withdrawable circuit breaker's basic device, cassette, shunt release (220V AC), closing release (220V AC), motor operator (220V AC), auxiliary contact (4CO), door escutcheon, wiring terminal, safety shutter, arc distinguishing cover, and handle.

Switch Disconnector Supplied as Standard, Withdrawable Type

			3P		4P	
Frame	**Rated current I_n (A)**	**Switching capacity I_{cw} (1s)**	**Part No.**	**Article No.**	**Part No.**	**Article No.**
IZM61	200	66	**IZM61N3C-02WH**	CAM-95040	**IZM61N4C-02WH**	CAM-95047
	400	66	**IZM61N3C-04WH**	CAM-95041	**IZM61N4C-04WH**	CAM-95048
	630	66	**IZM61N3C-06WH**	CAM-95042	**IZM61N4C-06WH**	CAM-95049
	800	66	**IZM61N3C-08WH**	CAM-95043	**IZM61N4C-08WH**	CAM-95050
	1000	66	**IZM61N3C-10WH**	CAM-95044	**IZM61N4C-10WH**	CAM-95051
	1250	66	**IZM61N3C-12WH**	CAM-95045	**IZM61N4C-12WH**	CAM-95052
	1600	66	**IZM61N3C-16WH**	CAM-95046	**IZM61N4C-16WH**	CAM-95053
IZM65	400	66	**IZM65N3C-04WH**	CAM-94992	**IZM65N4C-04WH**	CAM-95004
	630	66	**IZM65N3C-06WH**	CAM-94993	**IZM65N4C-06WH**	CAM-95005
	800	66	**IZM65N3C-08WH**	CAM-94994	**IZM65N4C-08WH**	CAM-95006
	1000	66	**IZM65N3C-10WH**	CAM-94995	**IZM65N4C-10WH**	CAM-95007
	1250	66	**IZM65N3C-12WH**	CAM-94996	**IZM65N4C-12WH**	CAM-95008
	1600	66	**IZM65N3C-16WH**	CAM-94997	**IZM65N4C-16WH**	CAM-95009
	2000	66	**IZM65N3C-20WH**	CAM-94998	**IZM65N4C-20WH**	CAM-95010
	2500	66	**IZM65N3C-25WH**	CAM-94999	**IZM65N4C-25WH**	CAM-95011
IZM67	2000	66	**IZM67N3C-20WH**	CAM-95000	**IZM67N4C-20WH**	CAM-95012
	2500	66	**IZM67N3C-25WH**	CAM-95001	**IZM67N4C-25WH**	CAM-95013
	3200	66	**IZM67N3C-32WH**	CAM-95002	**IZM67N4C-32WH**	CAM-95014
	4000	66	**IZM67N3C-40WH**	CAM-95003	**IZM67N4C-40WH**	CAM-95015
	4000	66	**IZM67N3C-40WV**	CAM-96200	**IZM67N4C-40WV**	CAM-96201
IZM67	2000	85	**IZM67S3C-20WH**	CAM-93570	**IZM67S4C-20WH**	CAM-93574
	2500	85	**IZM67S3C-25WH**	CAM-93571	**IZM67S4C-25WH**	CAM-93575
	3200	85	**IZM67S3C-32WH**	CAM-93572	**IZM67S4C-32WH**	CAM-93576
	4000	85	**IZM67S3C-40WH**	CAM-93573	**IZM67S4C-40WH**	CAM-93577
	4000	85	**IZM67S3C-40WV**	CAM-93602	**IZM67S4C-40WV**	CAM-93603

Devices supplied as standard:

Fixed circuit breaker's basic device, shunt release (220V AC), closing release (220V AC), motor operator (220V AC), auxiliary contact (4CO), door escutcheon, wiring terminal, arc distinguishing cover, and handle.

Switch Disconnector Supplied as Standard, Fixed Type

			3P		4P	
Frame	**Rated current I_n (A)**	**Switching capacity I_{cw} (1s)**	**Part No.**	**Article No.**	**Part No.**	**Article No.**
IZM61	200	66	**IZM61N3C-02FH**	CAM-95054	**IZM61N4C-02FH**	CAM-95061
	400	66	**IZM61N3C-04FH**	CAM-95055	**IZM61N4C-04FH**	CAM-95062
	630	66	**IZM61N3C-06FH**	CAM-95056	**IZM61N4C-06FH**	CAM-95063
	800	66	**IZM61N3C-08FH**	CAM-95057	**IZM61N4C-08FH**	CAM-95064
	1000	66	**IZM61N3C-10FH**	CAM-95058	**IZM61N4C-10FH**	CAM-95065
	1250	66	**IZM61N3C-12FH**	CAM-95059	**IZM61N4C-12FH**	CAM-95066
	1600	66	**IZM61N3C-16FH**	CAM-95060	**IZM61N4C-16FH**	CAM-95067
IZM65	400	66	**IZM65N3C-04FH**	CAM-95016	**IZM65N4C-04FH**	CAM-95028
	630	66	**IZM65N3C-06FH**	CAM-95017	**IZM65N4C-06FH**	CAM-95029
	800	66	**IZM65N3C-08FH**	CAM-95018	**IZM65N4C-08FH**	CAM-95030
	1000	66	**IZM65N3C-10FH**	CAM-95019	**IZM65N4C-10FH**	CAM-95031
	1250	66	**IZM65N3C-12FH**	CAM-95020	**IZM65N4C-12FH**	CAM-95032
	1600	66	**IZM65N3C-16FH**	CAM-95021	**IZM65N4C-16FH**	CAM-95033
	2000	66	**IZM65N3C-20FH**	CAM-95022	**IZM65N4C-20FH**	CAM-95034
	2500	66	**IZM65N3C-25FH**	CAM-95023	**IZM65N4C-25FH**	CAM-95035
IZM67	2000	66	**IZM67N3C-20FH**	CAM-95024	**IZM67N4C-20FH**	CAM-95036
	2500	66	**IZM67N3C-25FH**	CAM-95025	**IZM67N4C-25FH**	CAM-95037
	3200	66	**IZM67N3C-32FH**	CAM-95026	**IZM67N4C-32FH**	CAM-95038
	4000	66	**IZM67N3C-40FH**	CAM-95027	**IZM67N4C-40FH**	CAM-95039
	4000	66	**IZM67N3C-40FV**	CAM-96202	**IZM67N4C-40FV**	CAM-96203
IZM67	2000	85	**IZM67S3C-20FH**	CAM-93578	**IZM67S4C-20FH**	CAM-93582
	2500	85	**IZM67S3C-25FH**	CAM-93579	**IZM67S4C-25FH**	CAM-93583
	3200	85	**IZM67S3C-32FH**	CAM-93580	**IZM67S4C-32FH**	CAM-93584
	4000	85	**IZM67S3C-40FH**	CAM-93581	**IZM67S4C-40FH**	CAM-93585
	4000	85	**IZM67S3C-40FV**	CAM-93604	**IZM67S4C-40FV**	CAM-93605

Manually Operated Devices Include:

Withdrawable circuit breaker's basic device, cassette, auxiliary contact (4CO), PT intelligent trip unit, over current trip switch OTS (1CO), door escutcheon, wiring terminal, 220V AC to DC24V power module, safety shutter, arc distinguishing cover, and handle.

PT20 Trip Unit Manually Operated - Current Mode (LCD), Withdrawable Type

Current mode LSI			3P		4P	
Frame	**Rated current I_n (A)**	**Switching capacity I_{cu} (kA @440V AC)**	**Part No.**	**Article No.**	**Part No.**	**Article No.**
IZM61	200	66	**IZM61N3C-A02WHM**	CAM-95452	**IZM61N4C-A02WHM**	CAM-95480
	400	66	**IZM61N3C-A04WHM**	CAM-95453	**IZM61N4C-A04WHM**	CAM-95481
	630	66	**IZM61N3C-A06WHM**	CAM-95454	**IZM61N4C-A06WHM**	CAM-95482
	800	66	**IZM61N3C-A08WHM**	CAM-95455	**IZM61N4C-A08WHM**	CAM-95483
	1000	66	**IZM61N3C-A10WHM**	CAM-95456	**IZM61N4C-A10WHM**	CAM-95484
	1250	66	**IZM61N3C-A12WHM**	CAM-95457	**IZM61N4C-A12WHM**	CAM-95485
	1600	66	**IZM61N3C-A16WHM**	CAM-95458	**IZM61N4C-A16WHM**	CAM-95486
Current mode LSIG						
IZM61	200	66	**IZM61N3C-AG02WHM**	CAM-95466	**IZM61N4C-AG02WHM**	CAM-95494
	400	66	**IZM61N3C-AG04WHM**	CAM-95467	**IZM61N4C-AG04WHM**	CAM-95495
	630	66	**IZM61N3C-AG06WHM**	CAM-95468	**IZM61N4C-AG06WHM**	CAM-95496
	800	66	**IZM61N3C-AG08WHM**	CAM-95469	**IZM61N4C-AG08WHM**	CAM-95497
	1000	66	**IZM61N3C-AG10WHM**	CAM-95470	**IZM61N4C-AG10WHM**	CAM-95498
	1250	66	**IZM61N3C-AG12WHM**	CAM-95471	**IZM61N4C-AG12WHM**	CAM-95499
	1600	66	**IZM61N3C-AG16WHM**	CAM-95472	**IZM61N4C-AG16WHM**	CAM-95500
Current mode LSI + communication						
IZM61	200	66	**IZM61N3C-AC02WHM**	CAM-95459	**IZM61N4C-AC02WHM**	CAM-95487
	400	66	**IZM61N3C-AC04WHM**	CAM-95460	**IZM61N4C-AC04WHM**	CAM-95488
	630	66	**IZM61N3C-AC06WHM**	CAM-95461	**IZM61N4C-AC06WHM**	CAM-95489
	800	66	**IZM61N3C-AC08WHM**	CAM-95462	**IZM61N4C-AC08WHM**	CAM-95490
	1000	66	**IZM61N3C-AC10WHM**	CAM-95463	**IZM61N4C-AC10WHM**	CAM-95491
	1250	66	**IZM61N3C-AC12WHM**	CAM-95464	**IZM61N4C-AC12WHM**	CAM-95492
	1600	66	**IZM61N3C-AC16WHM**	CAM-95465	**IZM61N4C-AC16WHM**	CAM-95493
Current mode LSIG + communication						
IZM61	200	66	**IZM61N3C-AGC02WHM**	CAM-95473	**IZM61N4C-AGC02WHM**	CAM-95501
	400	66	**IZM61N3C-AGC04WHM**	CAM-95474	**IZM61N4C-AGC04WHM**	CAM-95502
	630	66	**IZM61N3C-AGC06WHM**	CAM-95475	**IZM61N4C-AGC06WHM**	CAM-95503
	800	66	**IZM61N3C-AGC08WHM**	CAM-95476	**IZM61N4C-AGC08WHM**	CAM-95504
	1000	66	**IZM61N3C-AGC10WHM**	CAM-95477	**IZM61N4C-AGC10WHM**	CAM-95505
	1250	66	**IZM61N3C-AGC12WHM**	CAM-95478	**IZM61N4C-AGC12WHM**	CAM-95506
	1600	66	**IZM61N3C-AGC16WHM**	CAM-95479	**IZM61N4C-AGC16WHM**	CAM-95507

PT25 Trip Unit Manually Operated - Power mode (LCD), Withdrawable Type

Power mode LSI			3P		4P	
Frame	**Rated current I_n (A)**	**Switching capacity I_{cu} (kA @440V AC)**	**Part No.**	**Article No.**	**Part No.**	**Article No.**
IZM61	200	66	**IZM61N3C-P02WHM**	CAM-95756	**IZM61N4C-P02WHM**	CAM-95770
	400	66	**IZM61N3C-P04WHM**	CAM-95757	**IZM61N4C-P04WHM**	CAM-95771
	630	66	**IZM61N3C-P06WHM**	CAM-95758	**IZM61N4C-P06WHM**	CAM-95772
	800	66	**IZM61N3C-P08WHM**	CAM-95759	**IZM61N4C-P08WHM**	CAM-95773
	1000	66	**IZM61N3C-P10WHM**	CAM-95760	**IZM61N4C-P10WHM**	CAM-95774
	1250	66	**IZM61N3C-P12WHM**	CAM-95761	**IZM61N4C-P12WHM**	CAM-95775
	1600	66	**IZM61N3C-P16WHM**	CAM-95762	**IZM61N4C-P16WHM**	CAM-95776
Power mode LSIG						
IZM61	200	66	**IZM61N3C-PG02WHM**	CAM-95763	**IZM61N4C-PG02WHM**	CAM-95777
	400	66	**IZM61N3C-PG04WHM**	CAM-95764	**IZM61N4C-PG04WHM**	CAM-95778
	630	66	**IZM61N3C-PG06WHM**	CAM-95765	**IZM61N4C-PG06WHM**	CAM-95779
	800	66	**IZM61N3C-PG08WHM**	CAM-95766	**IZM61N4C-PG08WHM**	CAM-95780
	1000	66	**IZM61N3C-PG10WHM**	CAM-95767	**IZM61N4C-PG10WHM**	CAM-95781
	1250	66	**IZM61N3C-PG12WHM**	CAM-95768	**IZM61N4C-PG12WHM**	CAM-95782
	1600	66	**IZM61N3C-PG16WHM**	CAM-95769	**IZM61N4C-PG16WHM**	CAM-95783

Manually Operated Devices Include:

Fixed circuit breaker's basic device, auxiliary contact (4CO), PT intelligent trip unit, over current trip switch OTS (1CO), door escutcheon, wiring terminal, 220V AC to DC24V power module, arc distinguishing cover, and handle.

PT20 Trip Unit Manually Operated - Current mode (LCD), Fixed Type

Current mode LSI			3P		4P	
Frame	**Rated current I_n (A)**	**Switching capacity I_{cu} (kA @440V AC)**	**Part No.**	**Article No.**	**Part No.**	**Article No.**
IZM61	200	66	**IZM61N3C-A02FHM**	CAM-95508	**IZM61N4C-A02FHM**	CAM-95536
	400	66	**IZM61N3C-A04FHM**	CAM-95509	**IZM61N4C-A04FHM**	CAM-95537
	630	66	**IZM61N3C-A06FHM**	CAM-95510	**IZM61N4C-A06FHM**	CAM-95538
	800	66	**IZM61N3C-A08FHM**	CAM-95511	**IZM61N4C-A08FHM**	CAM-95539
	1000	66	**IZM61N3C-A10FHM**	CAM-95512	**IZM61N4C-A10FHM**	CAM-95540
	1250	66	**IZM61N3C-A12FHM**	CAM-95513	**IZM61N4C-A12FHM**	CAM-95541
	1600	66	**IZM61N3C-A16FHM**	CAM-95514	**IZM61N4C-A16FHM**	CAM-95542
Current mode LSIG						
IZM61	200	66	**IZM61N3C-AG02FHM**	CAM-95522	**IZM61N4C-AG02FHM**	CAM-95550
	400	66	**IZM61N3C-AG04FHM**	CAM-95523	**IZM61N4C-AG04FHM**	CAM-95551
	630	66	**IZM61N3C-AG06FHM**	CAM-95524	**IZM61N4C-AG06FHM**	CAM-95552
	800	66	**IZM61N3C-AG08FHM**	CAM-95525	**IZM61N4C-AG08FHM**	CAM-95553
	1000	66	**IZM61N3C-AG10FHM**	CAM-95526	**IZM61N4C-AG10FHM**	CAM-95554
	1250	66	**IZM61N3C-AG12FHM**	CAM-95527	**IZM61N4C-AG12FHM**	CAM-95555
	1600	66	**IZM61N3C-AG16FHM**	CAM-95528	**IZM61N4C-AG16FHM**	CAM-95556
Current mode LSI + communication						
IZM61	200	66	**IZM61N3C-AC02FHM**	CAM-95515	**IZM61N4C-AC02FHM**	CAM-95543
	400	66	**IZM61N3C-AC04FHM**	CAM-95516	**IZM61N4C-AC04FHM**	CAM-95544
	630	66	**IZM61N3C-AC06FHM**	CAM-95517	**IZM61N4C-AC06FHM**	CAM-95545
	800	66	**IZM61N3C-AC08FHM**	CAM-95518	**IZM61N4C-AC08FHM**	CAM-95546
	1000	66	**IZM61N3C-AC10FHM**	CAM-95519	**IZM61N4C-AC10FHM**	CAM-95547
	1250	66	**IZM61N3C-AC12FHM**	CAM-95520	**IZM61N4C-AC12FHM**	CAM-95548
	1600	66	**IZM61N3C-AC16FHM**	CAM-95521	**IZM61N4C-AC16FHM**	CAM-95549
Current mode LSIG + communication						
IZM61	200	66	**IZM61N3C-AGC02FHM**	CAM-95529	**IZM61N4C-AGC02FHM**	CAM-95557
	400	66	**IZM61N3C-AGC04FHM**	CAM-95530	**IZM61N4C-AGC04FHM**	CAM-95558
	630	66	**IZM61N3C-AGC06FHM**	CAM-95531	**IZM61N4C-AGC06FHM**	CAM-95559
	800	66	**IZM61N3C-AGC08FHM**	CAM-95532	**IZM61N4C-AGC08FHM**	CAM-95560
	1000	66	**IZM61N3C-AGC10FHM**	CAM-95533	**IZM61N4C-AGC10FHM**	CAM-95561
	1250	66	**IZM61N3C-AGC12FHM**	CAM-95534	**IZM61N4C-AGC12FHM**	CAM-95562
	1600	66	**IZM61N3C-AGC16FHM**	CAM-95535	**IZM61N4C-AGC16FHM**	CAM-95563

PT25 Trip Unit Manually Operated - Power mode (LCD), Fixed Type

Power mode LSI			3P		4P	
Frame	**Rated current I_n (A)**	**Switching capacity I_{cu} (kA @440V AC)**	**Part No.**	**Article No.**	**Part No.**	**Article No.**
IZM61	200	66	**IZM61N3C-P02FHM**	CAM-95784	**IZM61N4C-P02FHM**	CAM-95798
	400	66	**IZM61N3C-P04FHM**	CAM-95785	**IZM61N4C-P04FHM**	CAM-95799
	630	66	**IZM61N3C-P06FHM**	CAM-95786	**IZM61N4C-P06FHM**	CAM-95800
	800	66	**IZM61N3C-P08FHM**	CAM-95787	**IZM61N4C-P08FHM**	CAM-95801
	1000	66	**IZM61N3C-P10FHM**	CAM-95788	**IZM61N4C-P10FHM**	CAM-95802
	1250	66	**IZM61N3C-P12FHM**	CAM-95789	**IZM61N4C-P12FHM**	CAM-95803
	1600	66	**IZM61N3C-P16FHM**	CAM-95790	**IZM61N4C-P16FHM**	CAM-95804
Power mode LSIG						
IZM61	200	66	**IZM61N3C-PG02FHM**	CAM-95791	**IZM61N4C-PG02FHM**	CAM-95805
	400	66	**IZM61N3C-PG04FHM**	CAM-95792	**IZM61N4C-PG04FHM**	CAM-95806
	630	66	**IZM61N3C-PG06FHM**	CAM-95793	**IZM61N4C-PG06FHM**	CAM-95807
	800	66	**IZM61N3C-PG08FHM**	CAM-95794	**IZM61N4C-PG08FHM**	CAM-95808
	1000	66	**IZM61N3C-PG10FHM**	CAM-95795	**IZM61N4C-PG10FHM**	CAM-95809
	1250	66	**IZM61N3C-PG12FHM**	CAM-95796	**IZM61N4C-PG12FHM**	CAM-95810
	1600	66	**IZM61N3C-PG16FHM**	CAM-95797	**IZM61N4C-PG16FHM**	CAM-95811

Manually Operated Devices Include:

Withdrawable circuit breaker's basic device, cassette, auxiliary contact (4CO), PT intelligent trip unit, over current trip switch OTS (1CO), door escutcheon, wiring terminal, 220V AC to DC24V power module, safety shutter, arc distinguishing cover, and handle.

PT10 Trip Unit Manually Operated - Current mode (Rotary Switch), Withdrawable Type

Current mode LSI			3P		4P	
Frame	**Rated current I_n (A)**	**Switching capacity I_{cu} (kA @440V AC)**	**Part No.**	**Article No.**	**Part No.**	**Article No.**
IZM61	200	66	**IZM61N3C-D02WHM**	CAM-96004	**IZM61N4C-D02WHM**	CAM-96018
	400	66	**IZM61N3C-D04WHM**	CAM-96005	**IZM61N4C-D04WHM**	CAM-96019
	630	66	**IZM61N3C-D06WHM**	CAM-96006	**IZM61N4C-D06WHM**	CAM-96020
	800	66	**IZM61N3C-D08WHM**	CAM-96007	**IZM61N4C-D08WHM**	CAM-96021
	1000	66	**IZM61N3C-D10WHM**	CAM-96008	**IZM61N4C-D10WHM**	CAM-96022
	1250	66	**IZM61N3C-D12WHM**	CAM-96009	**IZM61N4C-D12WHM**	CAM-96023
	1600	66	**IZM61N3C-D16WHM**	CAM-96010	**IZM61N4C-D16WHM**	CAM-96024
Current mode LSIG						
IZM61	200	66	**IZM61N3C-DG02WHM**	CAM-96011	**IZM61N4C-DG02WHM**	CAM-96025
	400	66	**IZM61N3C-DG04WHM**	CAM-96012	**IZM61N4C-DG04WHM**	CAM-96026
	630	66	**IZM61N3C-DG06WHM**	CAM-96013	**IZM61N4C-DG06WHM**	CAM-96027
	800	66	**IZM61N3C-DG08WHM**	CAM-96014	**IZM61N4C-DG08WHM**	CAM-96028
	1000	66	**IZM61N3C-DG10WHM**	CAM-96015	**IZM61N4C-DG10WHM**	CAM-96029
	1250	66	**IZM61N3C-DG12WHM**	CAM-96016	**IZM61N4C-DG12WHM**	CAM-96030
	1600	66	**IZM61N3C-DG16WHM**	CAM-96017	**IZM61N4C-DG16WHM**	CAM-96031

Manually Operated Devices Include:

Fixed circuit breaker's basic device, auxiliary contact (4CO), PT intelligent trip unit, over current trip switch OTS (1CO), door escutcheon, wiring terminal, 220V AC to DC24V power module, arc distinguishing cover, and handle.

PT10 Trip Unit Manually Operated - Current mode (Rotary Switch), Fixed Type

Current mode LSI			3P		4P	
Frame	**Rated current I_n (A)**	**Switching capacity I_{cu} (kA @440V AC)**	**Part No.**	**Article No.**	**Part No.**	**Article No.**
IZM61	200	66	**IZM61N3C-D02FHM**	CAM-96032	**IZM61N4C-D02FHM**	CAM-96046
	400	66	**IZM61N3C-D04FHM**	CAM-96033	**IZM61N4C-D04FHM**	CAM-96047
	630	66	**IZM61N3C-D06FHM**	CAM-96034	**IZM61N4C-D06FHM**	CAM-96048
	800	66	**IZM61N3C-D08FHM**	CAM-96035	**IZM61N4C-D08FHM**	CAM-96049
	1000	66	**IZM61N3C-D10FHM**	CAM-96036	**IZM61N4C-D10FHM**	CAM-96050
	1250	66	**IZM61N3C-D12FHM**	CAM-96037	**IZM61N4C-D12FHM**	CAM-96051
	1600	66	**IZM61N3C-D16FHM**	CAM-96038	**IZM61N4C-D16FHM**	CAM-96052
Current mode LSIG						
IZM61	200	66	**IZM61N3C-DG02FHM**	CAM-96039	**IZM61N4C-DG02FHM**	CAM-96053
	400	66	**IZM61N3C-DG04FHM**	CAM-96040	**IZM61N4C-DG04FHM**	CAM-96054
	630	66	**IZM61N3C-DG06FHM**	CAM-96041	**IZM61N4C-DG06FHM**	CAM-96055
	800	66	**IZM61N3C-DG08FHM**	CAM-96042	**IZM61N4C-DG08FHM**	CAM-96056
	1000	66	**IZM61N3C-DG10FHM**	CAM-96043	**IZM61N4C-DG10FHM**	CAM-96057
	1250	66	**IZM61N3C-DG12FHM**	CAM-96044	**IZM61N4C-DG12FHM**	CAM-96058
	1600	66	**IZM61N3C-DG16FHM**	CAM-96045	**IZM61N4C-DG16FHM**	CAM-96059

Manually Operated Devices Include:

Withdrawable circuit breaker's basic device, cassette, auxiliary contact (4CO), PT intelligent trip unit, over current trip switch OTS (1CO), door escutcheon, wiring terminal, 220V AC to DC24V power module, safety shutter, arc distinguishing cover, and handle.

PT20 Trip Unit Manually Operated - Current Mode (LCD), Withdrawable Type

Current mode LSI			3P		4P	
Frame	**Rated current I_n (A)**	**Switching capacity I_{cu} (kA @690V AC)**	**Part No.**	**Article No.**	**Part No.**	**Article No.**
IZM65	400	55	**IZM65B3C-A04WHM**	CAM-95260	**IZM65B4C-A04WHM**	CAM-95272
	630	55	**IZM65B3C-A06WHM**	CAM-95261	**IZM65B4C-A06WHM**	CAM-95273
	800	55	**IZM65B3C-A08WHM**	CAM-95262	**IZM65B4C-A08WHM**	CAM-95274
	1000	55	**IZM65B3C-A10WHM**	CAM-95263	**IZM65B4C-A10WHM**	CAM-95275
	1250	55	**IZM65B3C-A12WHM**	CAM-95264	**IZM65B4C-A12WHM**	CAM-95276
	1600	55	**IZM65B3C-A16WHM**	CAM-95265	**IZM65B4C-A16WHM**	CAM-95277
	2000	55	**IZM65B3C-A20WHM**	CAM-95266	**IZM65B4C-A20WHM**	CAM-95278
	2500	55	**IZM65B3C-A25WHM**	CAM-95267	**IZM65B4C-A25WHM**	CAM-95279
IZM67	2000	55	**IZM67B3C-A20WHM**	CAM-95268	**IZM67B4C-A20WHM**	CAM-95280
	2500	55	**IZM67B3C-A25WHM**	CAM-95269	**IZM67B4C-A25WHM**	CAM-95281
	3200	55	**IZM67B3C-A32WHM**	CAM-95270	**IZM67B4C-A32WHM**	CAM-95282
	4000	55	**IZM67B3C-A40WHM**	CAM-95271	**IZM67B4C-A40WHM**	CAM-95283
	4000	55	**IZM67B3C-A40WVM**	CAM-96220	**IZM67B4C-A40WVM**	CAM-96221
Current mode LSIG						
IZM65	400	55	**IZM65B3C-AG04WHM**	CAM-95284	**IZM65B4C-AG04WHM**	CAM-95296
	630	55	**IZM65B3C-AG06WHM**	CAM-95285	**IZM65B4C-AG06WHM**	CAM-95297
	800	55	**IZM65B3C-AG08WHM**	CAM-95286	**IZM65B4C-AG08WHM**	CAM-95298
	1000	55	**IZM65B3C-AG10WHM**	CAM-95287	**IZM65B4C-AG10WHM**	CAM-95299
	1250	55	**IZM65B3C-AG12WHM**	CAM-95288	**IZM65B4C-AG12WHM**	CAM-95300
	1600	55	**IZM65B3C-AG16WHM**	CAM-95289	**IZM65B4C-AG16WHM**	CAM-95301
	2000	55	**IZM65B3C-AG20WHM**	CAM-95290	**IZM65B4C-AG20WHM**	CAM-95302
	2500	55	**IZM65B3C-AG25WHM**	CAM-95291	**IZM65B4C-AG25WHM**	CAM-95303
IZM67	2000	55	**IZM67B3C-AG20WHM**	CAM-95292	**IZM67B4C-AG20WHM**	CAM-95304
	2500	55	**IZM67B3C-AG25WHM**	CAM-95293	**IZM67B4C-AG25WHM**	CAM-95305
	3200	55	**IZM67B3C-AG32WHM**	CAM-95294	**IZM67B4C-AG32WHM**	CAM-95306
	4000	55	**IZM67B3C-AG40WHM**	CAM-95295	**IZM67B4C-AG40WHM**	CAM-95307
	4000	55	**IZM67B3C-AG40WVM**	CAM-96222	**IZM67B4C-AG40WVM**	CAM-96223
Current mode LSI + communication						
IZM65	400	55	**IZM65B3C-AC04WHM**	CAM-95308	**IZM65B4C-AC04WHM**	CAM-95320
	630	55	**IZM65B3C-AC06WHM**	CAM-95309	**IZM65B4C-AC06WHM**	CAM-95321
	800	55	**IZM65B3C-AC08WHM**	CAM-95310	**IZM65B4C-AC08WHM**	CAM-95322
	1000	55	**IZM65B3C-AC10WHM**	CAM-95311	**IZM65B4C-AC10WHM**	CAM-95323
	1250	55	**IZM65B3C-AC12WHM**	CAM-95312	**IZM65B4C-AC12WHM**	CAM-95324
	1600	55	**IZM65B3C-AC16WHM**	CAM-95313	**IZM65B4C-AC16WHM**	CAM-95325
	2000	55	**IZM65B3C-AC20WHM**	CAM-95314	**IZM65B4C-AC20WHM**	CAM-95326
	2500	55	**IZM65B3C-AC25WHM**	CAM-95315	**IZM65B4C-AC25WHM**	CAM-95327
IZM67	2000	55	**IZM67B3C-AC20WHM**	CAM-95316	**IZM67B4C-AC20WHM**	CAM-95328
	2500	55	**IZM67B3C-AC25WHM**	CAM-95317	**IZM67B4C-AC25WHM**	CAM-95329
	3200	55	**IZM67B3C-AC32WHM**	CAM-95318	**IZM67B4C-AC32WHM**	CAM-95330
	4000	55	**IZM67B3C-AC40WHM**	CAM-95319	**IZM67B4C-AC40WHM**	CAM-95331
	4000	55	**IZM67B3C-AC40WVM**	CAM-96224	**IZM67B4C-AC40WVM**	CAM-96225
Current mode LSIG + communication						
IZM65	400	55	**IZM65B3C-AGC04WHM**	CAM-95332	**IZM65B4C-AGC04WHM**	CAM-95344
	630	55	**IZM65B3C-AGC06WHM**	CAM-95333	**IZM65B4C-AGC06WHM**	CAM-95345
	800	55	**IZM65B3C-AGC08WHM**	CAM-95334	**IZM65B4C-AGC08WHM**	CAM-95346
	1000	55	**IZM65B3C-AGC10WHM**	CAM-95335	**IZM65B4C-AGC10WHM**	CAM-95347
	1250	55	**IZM65B3C-AGC12WHM**	CAM-95336	**IZM65B4C-AGC12WHM**	CAM-95348
	1600	55	**IZM65B3C-AGC16WHM**	CAM-95337	**IZM65B4C-AGC16WHM**	CAM-95349
	2000	55	**IZM65B3C-AGC20WHM**	CAM-95338	**IZM65B4C-AGC20WHM**	CAM-95350
	2500	55	**IZM65B3C-AGC25WHM**	CAM-95339	**IZM65B4C-AGC25WHM**	CAM-95351
IZM67	2000	55	**IZM67B3C-AGC20WHM**	CAM-95340	**IZM67B4C-AGC20WHM**	CAM-95352
	2500	55	**IZM67B3C-AGC25WHM**	CAM-95341	**IZM67B4C-AGC25WHM**	CAM-95353
	3200	55	**IZM67B3C-AGC32WHM**	CAM-95342	**IZM67B4C-AGC32WHM**	CAM-95354
	4000	55	**IZM67B3C-AGC40WHM**	CAM-95343	**IZM67B4C-AGC40WHM**	CAM-95355
	4000	55	**IZM67B3C-AGC40WVM**	CAM-96226	**IZM67B4C-AGC40WVM**	CAM-96227

Manually Operated Devices Include:

Withdrawable circuit breaker's basic device, cassette, auxiliary contact (4CO), PT intelligent trip unit, over current trip switch OTS (1CO), door escutcheon, wiring terminal, 220V AC to DC24V power module, safety shutter, arc distinguishing cover, and handle.

PT20 Trip Unit Manually Operated - Current Mode (LCD), Withdrawable Type

Current mode LSI			3P		4P	
Frame	**Rated current I_n (A)**	**Switching capacity I_{cu} (kA @690V AC)**	**Part No.**	**Article No.**	**Part No.**	**Article No.**
IZM65	400	66	**IZM65N3C-A04WHM**	CAM-95068	**IZM65N4C-A04WHM**	CAM-95080
	630	66	**IZM65N3C-A06WHM**	CAM-95069	**IZM65N4C-A06WHM**	CAM-95081
	800	66	**IZM65N3C-A08WHM**	CAM-95070	**IZM65N4C-A08WHM**	CAM-95082
	1000	66	**IZM65N3C-A10WHM**	CAM-95071	**IZM65N4C-A10WHM**	CAM-95083
	1250	66	**IZM65N3C-A12WHM**	CAM-95072	**IZM65N4C-A12WHM**	CAM-95084
	1600	66	**IZM65N3C-A16WHM**	CAM-95073	**IZM65N4C-A16WHM**	CAM-95085
	2000	66	**IZM65N3C-A20WHM**	CAM-95074	**IZM65N4C-A20WHM**	CAM-95086
	2500	66	**IZM65N3C-A25WHM**	CAM-95075	**IZM65N4C-A25WHM**	CAM-95087
IZM67	2000	66	**IZM67N3C-A20WHM**	CAM-95076	**IZM67N4C-A20WHM**	CAM-95088
	2500	66	**IZM67N3C-A25WHM**	CAM-95077	**IZM67N4C-A25WHM**	CAM-95089
	3200	66	**IZM67N3C-A32WHM**	CAM-95078	**IZM67N4C-A32WHM**	CAM-95090
	4000	66	**IZM67N3C-A40WHM**	CAM-95079	**IZM67N4C-A40WHM**	CAM-95091
	4000	66	**IZM67N3C-A40WVM**	CAM-96204	**IZM67N4C-A40WVM**	CAM-96205
Current mode LSIG						
IZM65	400	66	**IZM65N3C-AG04WHM**	CAM-95092	**IZM65N4C-AG04WHM**	CAM-95104
	630	66	**IZM65N3C-AG06WHM**	CAM-95093	**IZM65N4C-AG06WHM**	CAM-95105
	800	66	**IZM65N3C-AG08WHM**	CAM-95094	**IZM65N4C-AG08WHM**	CAM-95106
	1000	66	**IZM65N3C-AG10WHM**	CAM-95095	**IZM65N4C-AG10WHM**	CAM-95107
	1250	66	**IZM65N3C-AG12WHM**	CAM-95096	**IZM65N4C-AG12WHM**	CAM-95108
	1600	66	**IZM65N3C-AG16WHM**	CAM-95097	**IZM65N4C-AG16WHM**	CAM-95109
	2000	66	**IZM65N3C-AG20WHM**	CAM-95098	**IZM65N4C-AG20WHM**	CAM-95110
	2500	66	**IZM65N3C-AG25WHM**	CAM-95099	**IZM65N4C-AG25WHM**	CAM-95111
IZM67	2000	66	**IZM67N3C-AG20WHM**	CAM-95100	**IZM67N4C-AG20WHM**	CAM-95112
	2500	66	**IZM67N3C-AG25WHM**	CAM-95101	**IZM67N4C-AG25WHM**	CAM-95113
	3200	66	**IZM67N3C-AG32WHM**	CAM-95102	**IZM67N4C-AG32WHM**	CAM-95114
	4000	66	**IZM67N3C-AG40WHM**	CAM-95103	**IZM67N4C-AG40WHM**	CAM-95115
	4000	66	**IZM67N3C-AG40WHM**	CAM-96206	**IZM67N4C-AG40WVM**	CAM-96207
Current mode LSI + communication						
IZM65	400	66	**IZM65N3C-AC04WHM**	CAM-95116	**IZM65N4C-AC04WHM**	CAM-95128
	630	66	**IZM65N3C-AC06WHM**	CAM-95117	**IZM65N4C-AC06WHM**	CAM-95129
	800	66	**IZM65N3C-AC08WHM**	CAM-95118	**IZM65N4C-AC08WHM**	CAM-95130
	1000	66	**IZM65N3C-AC10WHM**	CAM-95119	**IZM65N4C-AC10WHM**	CAM-95131
	1250	66	**IZM65N3C-AC12WHM**	CAM-95120	**IZM65N4C-AC12WHM**	CAM-95132
	1600	66	**IZM65N3C-AC16WHM**	CAM-95121	**IZM65N4C-AC16WHM**	CAM-95133
	2000	66	**IZM65N3C-AC20WHM**	CAM-95122	**IZM65N4C-AC20WHM**	CAM-95134
	2500	66	**IZM65N3C-AC25WHM**	CAM-95123	**IZM65N4C-AC25WHM**	CAM-95135
IZM67	2000	66	**IZM67N3C-AC20WHM**	CAM-95124	**IZM67N4C-AC20WHM**	CAM-95136
	2500	66	**IZM67N3C-AC25WHM**	CAM-95125	**IZM67N4C-AC25WHM**	CAM-95137
	3200	66	**IZM67N3C-AC32WHM**	CAM-95126	**IZM67N4C-AC32WHM**	CAM-95138
	4000	66	**IZM67N3C-AC40WHM**	CAM-95127	**IZM67N4C-AC40WHM**	CAM-95139
	4000	66	**IZM67N3C-AC40WVM**	CAM-96208	**IZM67N4C-AC40WVM**	CAM-96209
Current mode LSIG + communication						
IZM65	400	66	**IZM65N3C-AGC04WHM**	CAM-95140	**IZM65N4C-AGC04WHM**	CAM-95152
	630	66	**IZM65N3C-AGC06WHM**	CAM-95141	**IZM65N4C-AGC06WHM**	CAM-95153
	800	66	**IZM65N3C-AGC08WHM**	CAM-95142	**IZM65N4C-AGC08WHM**	CAM-95154
	1000	66	**IZM65N3C-AGC10WHM**	CAM-95143	**IZM65N4C-AGC10WHM**	CAM-95155
	1250	66	**IZM65N3C-AGC12WHM**	CAM-95144	**IZM65N4C-AGC12WHM**	CAM-95156
	1600	66	**IZM65N3C-AGC16WHM**	CAM-95145	**IZM65N4C-AGC16WHM**	CAM-95157
	2000	66	**IZM65N3C-AGC20WHM**	CAM-95146	**IZM65N4C-AGC20WHM**	CAM-95158
	2500	66	**IZM65N3C-AGC25WHM**	CAM-95147	**IZM65N4C-AGC25WHM**	CAM-95159
IZM67	2000	66	**IZM67N3C-AGC20WHM**	CAM-95148	**IZM67N4C-AGC20WHM**	CAM-95160
	2500	66	**IZM67N3C-AGC25WHM**	CAM-95149	**IZM67N4C-AGC25WHM**	CAM-95161
	3200	66	**IZM67N3C-AGC32WHM**	CAM-95150	**IZM67N4C-AGC32WHM**	CAM-95162
	4000	66	**IZM67N3C-AGC40WHM**	CAM-95151	**IZM67N4C-AGC40WHM**	CAM-95163
	4000	66	**IZM67N3C-AGC40WVM**	CAM-96210	**IZM67N4C-AGC40WVM**	CAM-96211

Manually Operated Devices Include:

Withdrawable circuit breaker's basic device, cassette, auxiliary contact (4CO), PT intelligent trip unit, over current trip switch OTS (1CO), door escutcheon, wiring terminal, 220V AC to DC24V power module, safety shutter, arc distinguishing cover, and handle.

PT20 Trip Unit Manually Operated - Current Mode (LCD), Withdrawable Type

Current mode LSI			3P		4P	
Frame	**Rated current I_n (A)**	**Switching capacity I_{cu} (kA @690V AC)**	**Part No.**	**Article No.**	**Part No.**	**Article No.**
IZM67	2000	85	**IZM67S3C-A20WHM**	CAM-93378	**IZM67S4C-A20WHM**	CAM-93382
	2500	85	**IZM67S3C-A25WHM**	CAM-93379	**IZM67S4C-A25WHM**	CAM-93383
	3200	85	**IZM67S3C-A32WHM**	CAM-93380	**IZM67S4C-A32WHM**	CAM-93384
	4000	85	**IZM67S3C-A40WHM**	CAM-93381	**IZM67S4C-A40WHM**	CAM-93385
	4000	85	**IZM67S3C-A40WVM**	CAM-93538	**IZM67S4C-A40WVM**	CAM-93539
Current mode LSIG						
IZM67	2000	85	**IZM67S3C-AG20WHM**	CAM-93386	**IZM67S4C-AG20WHM**	CAM-93390
	2500	85	**IZM67S3C-AG25WHM**	CAM-93387	**IZM67S4C-AG25WHM**	CAM-93391
	3200	85	**IZM67S3C-AG32WHM**	CAM-93388	**IZM67S4C-AG32WHM**	CAM-93392
	4000	85	**IZM67S3C-AG40WHM**	CAM-93389	**IZM67S4C-AG40WHM**	CAM-93393
	4000	85	**IZM67S3C-AG40WVM**	CAM-93540	**IZM67S4C-AG40WVM**	CAM-93541
Current mode LSI + communication						
IZM67	2000	85	**IZM67S3C-AC20WHM**	CAM-93394	**IZM67S4C-AC20WHM**	CAM-93398
	2500	85	**IZM67S3C-AC25WHM**	CAM-93395	**IZM67S4C-AC25WHM**	CAM-93399
	3200	85	**IZM67S3C-AC32WHM**	CAM-93396	**IZM67S4C-AC32WHM**	CAM-93400
	4000	85	**IZM67S3C-AC40WHM**	CAM-93397	**IZM67S4C-AC40WHM**	CAM-93401
	4000	85	**IZM67S3C-AC40WVM**	CAM-93542	**IZM67S4C-AC40WVM**	CAM-93543
Current mode LSIG + communication						
IZM67	2000	85	**IZM67S3C-AGC20WHM**	CAM-93402	**IZM67S4C-AGC20WHM**	CAM-93406
	2500	85	**IZM67S3C-AGC25WHM**	CAM-93403	**IZM67S4C-AGC25WHM**	CAM-93407
	3200	85	**IZM67S3C-AGC32WHM**	CAM-93404	**IZM67S4C-AGC32WHM**	CAM-93408
	4000	85	**IZM67S3C-AGC40WHM**	CAM-93405	**IZM67S4C-AGC40WHM**	CAM-93409
	4000	85	**IZM67S3C-AGC40WVM**	CAM-93544	**IZM67S4C-AGC40WVM**	CAM-93545

Manually Operated Devices Include:

Withdrawable circuit breaker's basic device, cassette, auxiliary contact (4CO), PT intelligent trip unit, over current trip switch OTS (1CO), door escutcheon, wiring terminal, 220V AC to DC24V power module, safety shutter, arc distinguishing cover, and handle.

PT25 Trip Unit Manually Operated - Power Mode (LCD), Withdrawable Type

Power mode LSI			3P		4P	
Frame	**Rated current I_n (A)**	**Switching capacity I_{cu} (kA @690V AC)**	**Part No.**	**Article No.**	**Part No.**	**Article No.**
IZM65	400	55	**IZM65B3C-P04WHM**	CAM-95660	**IZM65B4C-P04WHM**	CAM-95672
	630	55	**IZM65B3C-P06WHM**	CAM-95661	**IZM65B4C-P06WHM**	CAM-95673
	800	55	**IZM65B3C-P08WHM**	CAM-95662	**IZM65B4C-P08WHM**	CAM-95674
	1000	55	**IZM65B3C-P10WHM**	CAM-95663	**IZM65B4C-P10WHM**	CAM-95675
	1250	55	**IZM65B3C-P12WHM**	CAM-95664	**IZM65B4C-P12WHM**	CAM-95676
	1600	55	**IZM65B3C-P16WHM**	CAM-95665	**IZM65B4C-P16WHM**	CAM-95677
	2000	55	**IZM65B3C-P20WHM**	CAM-95666	**IZM65B4C-P20WHM**	CAM-95678
	2500	55	**IZM65B3C-P25WHM**	CAM-95667	**IZM65B4C-P25WHM**	CAM-95679
IZM67	2000	55	**IZM67B3C-P20WHM**	CAM-95668	**IZM67B4C-P20WHM**	CAM-95680
	2500	55	**IZM67B3C-P25WHM**	CAM-95669	**IZM67B4C-P25WHM**	CAM-95681
	3200	55	**IZM67B3C-P32WHM**	CAM-95670	**IZM67B4C-P32WHM**	CAM-95682
	4000	55	**IZM67B3C-P40WHM**	CAM-95671	**IZM67B4C-P40WHM**	CAM-95683
	4000	55	**IZM67B3C-P40WVM**	CAM-96244	**IZM67B4C-P40WVM**	CAM-96245
Power mode LSIG						
IZM65	400	55	**IZM65B3C-PG04WHM**	CAM-95684	**IZM65B4C-PG04WHM**	CAM-95696
	630	55	**IZM65B3C-PG06WHM**	CAM-95685	**IZM65B4C-PG06WHM**	CAM-95697
	800	55	**IZM65B3C-PG08WHM**	CAM-95686	**IZM65B4C-PG08WHM**	CAM-95698
	1000	55	**IZM65B3C-PG10WHM**	CAM-95687	**IZM65B4C-PG10WHM**	CAM-95699
	1250	55	**IZM65B3C-PG12WHM**	CAM-95688	**IZM65B4C-PG12WHM**	CAM-95700
	1600	55	**IZM65B3C-PG16WHM**	CAM-95689	**IZM65B4C-PG16WHM**	CAM-95701
	2000	55	**IZM65B3C-PG20WHM**	CAM-95690	**IZM65B4C-PG20WHM**	CAM-95702
	2500	55	**IZM65B3C-PG25WHM**	CAM-95691	**IZM65B4C-PG25WHM**	CAM-95703
IZM67	2000	55	**IZM67B3C-PG20WHM**	CAM-95692	**IZM67B4C-PG20WHM**	CAM-95704
	2500	55	**IZM67B3C-PG25WHM**	CAM-95693	**IZM67B4C-PG25WHM**	CAM-95705
	3200	55	**IZM67B3C-PG32WHM**	CAM-95694	**IZM67B4C-PG32WHM**	CAM-95706
	4000	55	**IZM67B3C-PG40WHM**	CAM-95695	**IZM67B4C-PG40WHM**	CAM-95707
	4000	55	**IZM67B3C-PG40WVM**	CAM-96246	**IZM67B4C-PG40WVM**	CAM-96247
Power mode LSI						
IZM65	400	66	**IZM65N3C-P04WHM**	CAM-95564	**IZM65N4C-P04WHM**	CAM-95576
	630	66	**IZM65N3C-P06WHM**	CAM-95565	**IZM65N4C-P06WHM**	CAM-95577
	800	66	**IZM65N3C-P08WHM**	CAM-95566	**IZM65N4C-P08WHM**	CAM-95578
	1000	66	**IZM65N3C-P10WHM**	CAM-95567	**IZM65N4C-P10WHM**	CAM-95579
	1250	66	**IZM65N3C-P12WHM**	CAM-95568	**IZM65N4C-P12WHM**	CAM-95580
	1600	66	**IZM65N3C-P16WHM**	CAM-95569	**IZM65N4C-P16WHM**	CAM-95581
	2000	66	**IZM65N3C-P20WHM**	CAM-95570	**IZM65N4C-P20WHM**	CAM-95582
	2500	66	**IZM65N3C-P25WHM**	CAM-95571	**IZM65N4C-P25WHM**	CAM-95583
IZM67	2000	66	**IZM67N3C-P20WHM**	CAM-95572	**IZM67N4C-P20WHM**	CAM-95584
	2500	66	**IZM67N3C-P25WHM**	CAM-95573	**IZM67N4C-P25WHM**	CAM-95585
	3200	66	**IZM67N3C-P32WHM**	CAM-95574	**IZM67N4C-P32WHM**	CAM-95586
	4000	66	**IZM67N3C-P40WHM**	CAM-95575	**IZM67N4C-P40WHM**	CAM-95587
	4000	66	**IZM67N3C-P40WVM**	CAM-96236	**IZM67N4C-P40WVM**	CAM-96237
Power mode LSIG						
IZM65	400	66	**IZM65N3C-PG04WHM**	CAM-95588	**IZM65N4C-PG04WHM**	CAM-95600
	630	66	**IZM65N3C-PG06WHM**	CAM-95589	**IZM65N4C-PG06WHM**	CAM-95601
	800	66	**IZM65N3C-PG08WHM**	CAM-95590	**IZM65N4C-PG08WHM**	CAM-95602
	1000	66	**IZM65N3C-PG10WHM**	CAM-95591	**IZM65N4C-PG10WHM**	CAM-95603
	1250	66	**IZM65N3C-PG12WHM**	CAM-95592	**IZM65N4C-PG12WHM**	CAM-95604
	1600	66	**IZM65N3C-PG16WHM**	CAM-95593	**IZM65N4C-PG16WHM**	CAM-95605
	2000	66	**IZM65N3C-PG20WHM**	CAM-95594	**IZM65N4C-PG20WHM**	CAM-95606
	2500	66	**IZM65N3C-PG25WHM**	CAM-95595	**IZM65N4C-PG25WHM**	CAM-95607
IZM67	2000	66	**IZM67N3C-PG20WHM**	CAM-95596	**IZM67N4C-PG20WHM**	CAM-95608
	2500	66	**IZM67N3C-PG25WHM**	CAM-95597	**IZM67N4C-PG25WHM**	CAM-95609
	3200	66	**IZM67N3C-PG32WHM**	CAM-95598	**IZM67N4C-PG32WHM**	CAM-95610
	4000	66	**IZM67N3C-PG40WHM**	CAM-95599	**IZM67N4C-PG40WHM**	CAM-95611
	4000	66	**IZM67N3C-PG40WVM**	CAM-96238	**IZM67N4C-PG40WVM**	CAM-96239

PT25 Trip Unit Manually Operated - Power Mode (LCD), Withdrawable Type

Current mode LSI			3P		4P	
Frame	**Rated current I_n (A)**	**Switching capacity I_{cu} (kA @690V AC)**	**Part No.**	**Article No.**	**Part No.**	**Article No.**
IZM67	2000	85	**IZM67S3C-P20WHM**	CAM-93442	**IZM67S4C-P20WHM**	CAM-93446
	2500	85	**IZM67S3C-P25WHM**	CAM-93443	**IZM67S4C-P25WHM**	CAM-93447
	3200	85	**IZM67S3C-P32WHM**	CAM-93444	**IZM67S4C-P32WHM**	CAM-93448
	4000	85	**IZM67S3C-P40WHM**	CAM-93445	**IZM67S4C-P40WHM**	CAM-93449
	4000	85	**IZM67S3C-P40WVM**	CAM-93554	**IZM67S4C-P40WVM**	CAM-93555
Current mode LSIG						
IZM67	2000	85	**IZM67S3C-PG20WHM**	CAM-93450	**IZM67S4C-PG20WHM**	CAM-93454
	2500	85	**IZM67S3C-PG25WHM**	CAM-93451	**IZM67S4C-PG25WHM**	CAM-93455
	3200	85	**IZM67S3C-PG32WHM**	CAM-93452	**IZM67S4C-PG32WHM**	CAM-93456
	4000	85	**IZM67S3C-PG40WHM**	CAM-93453	**IZM67S4C-PG40WHM**	CAM-93457
	4000	85	**IZM67S3C-PG40WVM**	CAM-93556	**IZM67S4C-PG40WVM**	CAM-93557

Manually Operated Devices Include:

Fixed circuit breaker's basic device, auxiliary contact (4CO), PT intelligent trip unit, over current trip switch OTS (1CO), door escutcheon, wiring terminal, 220V AC to DC24V power module, arc distinguishing cover, and handle.

PT20 Trip Unit Manually Operated - Current mode (LCD), Fixed Type

Current mode LSI			3P		4P	
Frame	**Rated current I_n (A)**	**Switching capacity I_{cu} (kA @690V AC)**	**Part No.**	**Article No.**	**Part No.**	**Article No.**
IZM65	400	55	**IZM65B3C-A04FHM**	CAM-95356	**IZM65B4C-A04FHM**	CAM-95368
	630	55	**IZM65B3C-A06FHM**	CAM-95357	**IZM65B4C-A06FHM**	CAM-95369
	800	55	**IZM65B3C-A08FHM**	CAM-95358	**IZM65B4C-A08FHM**	CAM-95370
	1000	55	**IZM65B3C-A10FHM**	CAM-95359	**IZM65B4C-A10FHM**	CAM-95371
	1250	55	**IZM65B3C-A12FHM**	CAM-95360	**IZM65B4C-A12FHM**	CAM-95372
	1600	55	**IZM65B3C-A16FHM**	CAM-95361	**IZM65B4C-A16FHM**	CAM-95373
	2000	55	**IZM65B3C-A20FHM**	CAM-95362	**IZM65B4C-A20FHM**	CAM-95374
	2500	55	**IZM65B3C-A25FHM**	CAM-95363	**IZM65B4C-A25FHM**	CAM-95375
IZM67	2000	55	**IZM67B3C-A20FHM**	CAM-95364	**IZM67B4C-A20FHM**	CAM-95376
	2500	55	**IZM67B3C-A25FHM**	CAM-95365	**IZM67B4C-A25FHM**	CAM-95377
	3200	55	**IZM67B3C-A32FHM**	CAM-95366	**IZM67B4C-A32FHM**	CAM-95378
	4000	55	**IZM67B3C-A40FHM**	CAM-95367	**IZM67B4C-A40FHM**	CAM-95379
	4000	55	**IZM67B3C-A40FVM**	CAM-96228	**IZM67B4C-A40FVM**	CAM-96229
Current mode LSIG						
IZM65	400	55	**IZM65B3C-AG04FHM**	CAM-95380	**IZM65B4C-AG04FHM**	CAM-95392
	630	55	**IZM65B3C-AG06FHM**	CAM-95381	**IZM65B4C-AG06FHM**	CAM-95393
	800	55	**IZM65B3C-AG08FHM**	CAM-95382	**IZM65B4C-AG08FHM**	CAM-95394
	1000	55	**IZM65B3C-AG10FHM**	CAM-95383	**IZM65B4C-AG10FHM**	CAM-95395
	1250	55	**IZM65B3C-AG12FHM**	CAM-95384	**IZM65B4C-AG12FHM**	CAM-95396
	1600	55	**IZM65B3C-AG16FHM**	CAM-95385	**IZM65B4C-AG16FHM**	CAM-95397
	2000	55	**IZM65B3C-AG20FHM**	CAM-95386	**IZM65B4C-AG20FHM**	CAM-95398
	2500	55	**IZM65B3C-AG25FHM**	CAM-95387	**IZM65B4C-AG25FHM**	CAM-95399
IZM67	2000	55	**IZM67B3C-AG20FHM**	CAM-95388	**IZM67B4C-AG20FHM**	CAM-95400
	2500	55	**IZM67B3C-AG25FHM**	CAM-95389	**IZM67B4C-AG25FHM**	CAM-95401
	3200	55	**IZM67B3C-AG32FHM**	CAM-95390	**IZM67B4C-AG32FHM**	CAM-95402
	4000	55	**IZM67B3C-AG40FHM**	CAM-95391	**IZM67B4C-AG40FHM**	CAM-95403
	4000	55	**IZM67B3C-AG40FVM**	CAM-96230	**IZM67B4C-AG40FVM**	CAM-96231
Current mode LSI + communication						
IZM65	400	55	**IZM65B3C-AC04FHM**	CAM-95404	**IZM65B4C-AC04FHM**	CAM-95416
	630	55	**IZM65B3C-AC06FHM**	CAM-95405	**IZM65B4C-AC06FHM**	CAM-95417
	800	55	**IZM65B3C-AC08FHM**	CAM-95406	**IZM65B4C-AC08FHM**	CAM-95418
	1000	55	**IZM65B3C-AC10FHM**	CAM-95407	**IZM65B4C-AC10FHM**	CAM-95419
	1250	55	**IZM65B3C-AC12FHM**	CAM-95408	**IZM65B4C-AC12FHM**	CAM-95420
	1600	55	**IZM65B3C-AC16FHM**	CAM-95409	**IZM65B4C-AC16FHM**	CAM-95421
	2000	55	**IZM65B3C-AC20FHM**	CAM-95410	**IZM65B4C-AC20FHM**	CAM-95422
	2500	55	**IZM65B3C-AC25FHM**	CAM-95411	**IZM65B4C-AC25FHM**	CAM-95423
IZM67	2000	55	**IZM67B3C-AC20FHM**	CAM-95412	**IZM67B4C-AC20FHM**	CAM-95424
	2500	55	**IZM67B3C-AC25FHM**	CAM-95413	**IZM67B4C-AC25FHM**	CAM-95425
	3200	55	**IZM67B3C-AC32FHM**	CAM-95414	**IZM67B4C-AC32FHM**	CAM-95426
	4000	55	**IZM67B3C-AC40FHM**	CAM-95415	**IZM67B4C-AC40FHM**	CAM-95427
	4000	55	**IZM67B3C-AC40FVM**	CAM-96232	**IZM67B4C-AC40FVM**	CAM-96233
Current mode LSIG + communication						
IZM65	400	55	**IZM65B3C-AGC04FHM**	CAM-95428	**IZM65B4C-AGC04FHM**	CAM-95440
	630	55	**IZM65B3C-AGC06FHM**	CAM-95429	**IZM65B4C-AGC06FHM**	CAM-95441
	800	55	**IZM65B3C-AGC08FHM**	CAM-95430	**IZM65B4C-AGC08FHM**	CAM-95442
	1000	55	**IZM65B3C-AGC10FHM**	CAM-95431	**IZM65B4C-AGC10FHM**	CAM-95443
	1250	55	**IZM65B3C-AGC12FHM**	CAM-95432	**IZM65B4C-AGC12FHM**	CAM-95444
	1600	55	**IZM65B3C-AGC16FHM**	CAM-95433	**IZM65B4C-AGC16FHM**	CAM-95445
	2000	55	**IZM65B3C-AGC20FHM**	CAM-95434	**IZM65B4C-AGC20FHM**	CAM-95446
	2500	55	**IZM65B3C-AGC25FHM**	CAM-95435	**IZM65B4C-AGC25FHM**	CAM-95447
IZM67	2000	55	**IZM67B3C-AGC20FHM**	CAM-95436	**IZM67B4C-AGC20FHM**	CAM-95448
	2500	55	**IZM67B3C-AGC25FHM**	CAM-95437	**IZM67B4C-AGC25FHM**	CAM-95449
	3200	55	**IZM67B3C-AGC32FHM**	CAM-95438	**IZM67B4C-AGC32FHM**	CAM-95450
	4000	55	**IZM67B3C-AGC40FHM**	CAM-95439	**IZM67B4C-AGC40FHM**	CAM-95451
	4000	55	**IZM67B3C-AGC40FVM**	CAM-96234	**IZM67B4C-AGC40FVM**	CAM-96235

Manually Operated Devices Include:

Fixed circuit breaker's basic device, auxiliary contact (4CO), PT intelligent trip unit, over current trip switch OTS (1CO), door escutcheon, wiring terminal, 220V AC to DC24V power module, arc distinguishing cover, and handle.

PT20 Trip Unit Manually Operated - Current mode (LCD), Fixed Type

Current mode LSI			3P		4P	
Frame	**Rated current I_n (A)**	**Switching capacity I_{cu} (kA @690V AC)**	**Part No.**	**Article No.**	**Part No.**	**Article No.**
IZM65	400	66	**IZM65N3C-A04FHM**	CAM-95164	**IZM65N4C-A04FHM**	CAM-95176
	630	66	**IZM65N3C-A06FHM**	CAM-95165	**IZM65N4C-A06FHM**	CAM-95177
	800	66	**IZM65N3C-A08FHM**	CAM-95166	**IZM65N4C-A08FHM**	CAM-95178
	1000	66	**IZM65N3C-A10FHM**	CAM-95167	**IZM65N4C-A10FHM**	CAM-95179
	1250	66	**IZM65N3C-A12FHM**	CAM-95168	**IZM65N4C-A12FHM**	CAM-95180
	1600	66	**IZM65N3C-A16FHM**	CAM-95169	**IZM65N4C-A16FHM**	CAM-95181
	2000	66	**IZM65N3C-A20FHM**	CAM-95170	**IZM65N4C-A20FHM**	CAM-95182
	2500	66	**IZM65N3C-A25FHM**	CAM-95171	**IZM65N4C-A25FHM**	CAM-95183
IZM67	2000	66	**IZM67N3C-A20FHM**	CAM-95172	**IZM67N4C-A20FHM**	CAM-95184
	2500	66	**IZM67N3C-A25FHM**	CAM-95173	**IZM67N4C-A25FHM**	CAM-95185
	3200	66	**IZM67N3C-A32FHM**	CAM-95174	**IZM67N4C-A32FHM**	CAM-95186
	4000	66	**IZM67N3C-A40FHM**	CAM-95175	**IZM67N4C-A40FHM**	CAM-95187
	4000	66	**IZM67N3C-A40FVM**	CAM-96212	**IZM67N4C-A40FVM**	CAM-96213
Current mode LSIG						
IZM65	400	66	**IZM65N3C-AG04FHM**	CAM-95188	**IZM65N4C-AG04FHM**	CAM-95200
	630	66	**IZM65N3C-AG06FHM**	CAM-95189	**IZM65N4C-AG06FHM**	CAM-95201
	800	66	**IZM65N3C-AG08FHM**	CAM-95190	**IZM65N4C-AG08FHM**	CAM-95202
	1000	66	**IZM65N3C-AG10FHM**	CAM-95191	**IZM65N4C-AG10FHM**	CAM-95203
	1250	66	**IZM65N3C-AG12FHM**	CAM-95192	**IZM65N4C-AG12FHM**	CAM-95204
	1600	66	**IZM65N3C-AG16FHM**	CAM-95193	**IZM65N4C-AG16FHM**	CAM-95205
	2000	66	**IZM65N3C-AG20FHM**	CAM-95194	**IZM65N4C-AG20FHM**	CAM-95206
	2500	66	**IZM65N3C-AG25FHM**	CAM-95195	**IZM65N4C-AG25FHM**	CAM-95207
IZM67	2000	66	**IZM67N3C-AG20FHM**	CAM-95196	**IZM67N4C-AG20FHM**	CAM-95208
	2500	66	**IZM67N3C-AG25FHM**	CAM-95197	**IZM67N4C-AG25FHM**	CAM-95209
	3200	66	**IZM67N3C-AG32FHM**	CAM-95198	**IZM67N4C-AG32FHM**	CAM-95210
	4000	66	**IZM67N3C-AG40FHM**	CAM-95199	**IZM67N4C-AG40FHM**	CAM-95211
	4000	66	**IZM67N3C-AG40FVM**	CAM-96214	**IZM67N4C-AG40FVM**	CAM-96215
Current mode LSI + communication						
IZM65	400	66	**IZM65N3C-AC04FHM**	CAM-95212	**IZM65N4C-AC04FHM**	CAM-95224
	630	66	**IZM65N3C-AC06FHM**	CAM-95213	**IZM65N4C-AC06FHM**	CAM-95225
	800	66	**IZM65N3C-AC08FHM**	CAM-95214	**IZM65N4C-AC08FHM**	CAM-95226
	1000	66	**IZM65N3C-AC10FHM**	CAM-95215	**IZM65N4C-AC10FHM**	CAM-95227
	1250	66	**IZM65N3C-AC12FHM**	CAM-95216	**IZM65N4C-AC12FHM**	CAM-95228
	1600	66	**IZM65N3C-AC16FHM**	CAM-95217	**IZM65N4C-AC16FHM**	CAM-95229
	2000	66	**IZM65N3C-AC20FHM**	CAM-95218	**IZM65N4C-AC20FHM**	CAM-95230
	2500	66	**IZM65N3C-AC25FHM**	CAM-95219	**IZM65N4C-AC25FHM**	CAM-95231
IZM67	2000	66	**IZM67N3C-AC20FHM**	CAM-95220	**IZM67N4C-AC20FHM**	CAM-95232
	2500	66	**IZM67N3C-AC25FHM**	CAM-95221	**IZM67N4C-AC25FHM**	CAM-95233
	3200	66	**IZM67N3C-AC32FHM**	CAM-95222	**IZM67N4C-AC32FHM**	CAM-95234
	4000	66	**IZM67N3C-AC40FHM**	CAM-95223	**IZM67N4C-AC40FHM**	CAM-95235
	4000	66	**IZM67N3C-AC40FVM**	CAM-96216	**IZM67N4C-AC40FVM**	CAM-96217
Current mode LSIG + communication						
IZM65	400	66	**IZM65N3C-AGC04FHM**	CAM-95236	**IZM65N4C-AGC04FHM**	CAM-95248
	630	66	**IZM65N3C-AGC06FHM**	CAM-95237	**IZM65N4C-AGC06FHM**	CAM-95249
	800	66	**IZM65N3C-AGC08FHM**	CAM-95238	**IZM65N4C-AGC08FHM**	CAM-95250
	1000	66	**IZM65N3C-AGC10FHM**	CAM-95239	**IZM65N4C-AGC10FHM**	CAM-95251
	1250	66	**IZM65N3C-AGC12FHM**	CAM-95240	**IZM65N4C-AGC12FHM**	CAM-95252
	1600	66	**IZM65N3C-AGC16FHM**	CAM-95241	**IZM65N4C-AGC16FHM**	CAM-95253
	2000	66	**IZM65N3C-AGC20FHM**	CAM-95242	**IZM65N4C-AGC20FHM**	CAM-95254
	2500	66	**IZM65N3C-AGC25FHM**	CAM-95243	**IZM65N4C-AGC25FHM**	CAM-95255
IZM67	2000	66	**IZM67N3C-AGC20FHM**	CAM-95244	**IZM67N4C-AGC20FHM**	CAM-95256
	2500	66	**IZM67N3C-AGC25FHM**	CAM-95245	**IZM67N4C-AGC25FHM**	CAM-95257
	3200	66	**IZM67N3C-AGC32FHM**	CAM-95246	**IZM67N4C-AGC32FHM**	CAM-95258
	4000	66	**IZM67N3C-AGC40FHM**	CAM-95247	**IZM67N4C-AGC40FHM**	CAM-95259
	4000	66	**IZM67N3C-AGC40FVM**	CAM-96218	**IZM67N4C-AGC40FVM**	CAM-96219

Manually Operated Devices Include:

Fixed circuit breaker's basic device, auxiliary contact (4CO), PT intelligent trip unit, over current trip switch OTS (1CO), door escutcheon, wiring terminal, 220V AC to DC24V power module, arc distinguishing cover, and handle.

PT20 Trip Unit Manually Operated - Current mode (LCD), Fixed Type

Current mode LSI			3P		4P	
Frame	**Rated current I_n (A)**	**Switching capacity I_{cu} (kA @690V AC)**	**Part No.**	**Article No.**	**Part No.**	**Article No.**
IZM67	2000	85	**IZM67S3C-A20FHM**	CAM-93410	**IZM67S4C-A20FHM**	CAM-93414
	2500	85	**IZM67S3C-A25FHM**	CAM-93411	**IZM67S4C-A25FHM**	CAM-93415
	3200	85	**IZM67S3C-A32FHM**	CAM-93412	**IZM67S4C-A32FHM**	CAM-93416
	4000	85	**IZM67S3C-A40FHM**	CAM-93413	**IZM67S4C-A40FHM**	CAM-93417
	4000	85	**IZM67S3C-A40FVM**	CAM-93546	**IZM67S4C-A40FVM**	CAM-93547
Current mode LSIG						
IZM67	2000	85	**IZM67S3C-AG20FHM**	CAM-93418	**IZM67S4C-AG20FHM**	CAM-93422
	2500	85	**IZM67S3C-AG25FHM**	CAM-93419	**IZM67S4C-AG25FHM**	CAM-93423
	3200	85	**IZM67S3C-AG32FHM**	CAM-93420	**IZM67S4C-AG32FHM**	CAM-93424
	4000	85	**IZM67S3C-AG40FHM**	CAM-93421	**IZM67S4C-AG40FHM**	CAM-93425
	4000	85	**IZM67S3C-AG40FVM**	CAM-93548	**IZM67S4C-AG40FVM**	CAM-93549
Current mode LSI + communication						
IZM67	2000	85	**IZM67S3C-AC20FHM**	CAM-93426	**IZM67S4C-AC20FHM**	CAM-93430
	2500	85	**IZM67S3C-AC25FHM**	CAM-93427	**IZM67S4C-AC25FHM**	CAM-93431
	3200	85	**IZM67S3C-AC32FHM**	CAM-93428	**IZM67S4C-AC32FHM**	CAM-93432
	4000	85	**IZM67S3C-AC40FHM**	CAM-93429	**IZM67S4C-AC40FHM**	CAM-93433
	4000	85	**IZM67S3C-AC40FVM**	CAM-93550	**IZM67S4C-AC40FVM**	CAM-93551
Current mode LSIG + communication						
IZM67	2000	85	**IZM67S3C-AGC20FHM**	CAM-93434	**IZM67S4C-AGC20FHM**	CAM-93438
	2500	85	**IZM67S3C-AGC25FHM**	CAM-93435	**IZM67S4C-AGC25FHM**	CAM-93439
	3200	85	**IZM67S3C-AGC32FHM**	CAM-93436	**IZM67S4C-AGC32FHM**	CAM-93440
	4000	85	**IZM67S3C-AGC40FHM**	CAM-93437	**IZM67S4C-AGC40FHM**	CAM-93441
	4000	85	**IZM67S3C-AGC40FVM**	CAM-93552	**IZM67S4C-AGC40FVM**	CAM-93553

Manually Operated Devices Include:

Fixed circuit breaker's basic device, auxiliary contact (4CO), PT intelligent trip unit, over current trip switch OTS (1CO), door escutcheon, wiring terminal, 220V AC to DC24V power module, arc distinguishing cover, and handle.

PT25 Trip Unit Manually Operated - Power Mode (LCD), Fixed Type

Power mode LSI			3P		4P	
Frame	**Rated current I_n (A)**	**Switching capacity I_{cu} (kA @690V AC)**	**Part No.**	**Article No.**	**Part No.**	**Article No.**
IZM65	400	55	**IZM65B3C-P04FHM**	CAM-95708	**IZM65B4C-P04FHM**	CAM-95720
	630	55	**IZM65B3C-P06FHM**	CAM-95709	**IZM65B4C-P06FHM**	CAM-95721
	800	55	**IZM65B3C-P08FHM**	CAM-95710	**IZM65B4C-P08FHM**	CAM-95722
	1000	55	**IZM65B3C-P10FHM**	CAM-95711	**IZM65B4C-P10FHM**	CAM-95723
	1250	55	**IZM65B3C-P12FHM**	CAM-95712	**IZM65B4C-P12FHM**	CAM-95724
	1600	55	**IZM65B3C-P16FHM**	CAM-95713	**IZM65B4C-P16FHM**	CAM-95725
	2000	55	**IZM65B3C-P20FHM**	CAM-95714	**IZM65B4C-P20FHM**	CAM-95726
	2500	55	**IZM65B3C-P25FHM**	CAM-95715	**IZM65B4C-P25FHM**	CAM-95727
IZM67	2000	55	**IZM67B3C-P20FHM**	CAM-95716	**IZM67B4C-P20FHM**	CAM-95728
	2500	55	**IZM67B3C-P25FHM**	CAM-95717	**IZM67B4C-P25FHM**	CAM-95729
	3200	55	**IZM67B3C-P32FHM**	CAM-95718	**IZM67B4C-P32FHM**	CAM-95730
	4000	55	**IZM67B3C-P40FHM**	CAM-95719	**IZM67B4C-P40FHM**	CAM-95731
	4000	55	**IZM67B3C-P40FVM**	CAM-96248	**IZM67B4C-P40FVM**	CAM-96249
Power mode LSIG						
IZM65	400	55	**IZM65B3C-PG04FHM**	CAM-95732	**IZM65B4C-PG04FHM**	CAM-95744
	630	55	**IZM65B3C-PG06FHM**	CAM-95733	**IZM65B4C-PG06FHM**	CAM-95745
	800	55	**IZM65B3C-PG08FHM**	CAM-95734	**IZM65B4C-PG08FHM**	CAM-95746
	1000	55	**IZM65B3C-PG10FHM**	CAM-95735	**IZM65B4C-PG10FHM**	CAM-95747
	1250	55	**IZM65B3C-PG12FHM**	CAM-95736	**IZM65B4C-PG12FHM**	CAM-95748
	1600	55	**IZM65B3C-PG16FHM**	CAM-95737	**IZM65B4C-PG16FHM**	CAM-95749
	2000	55	**IZM65B3C-PG20FHM**	CAM-95738	**IZM65B4C-PG20FHM**	CAM-95750
	2500	55	**IZM65B3C-PG25FHM**	CAM-95739	**IZM65B4C-PG25FHM**	CAM-95751
IZM67	2000	55	**IZM67B3C-PG20FHM**	CAM-95740	**IZM67B4C-PG20FHM**	CAM-95752
	2500	55	**IZM67B3C-PG25FHM**	CAM-95741	**IZM67B4C-PG25FHM**	CAM-95753
	3200	55	**IZM67B3C-PG32FHM**	CAM-95742	**IZM67B4C-PG32FHM**	CAM-95754
	4000	55	**IZM67B3C-PG40FHM**	CAM-95743	**IZM67B4C-PG40FHM**	CAM-95755
	4000	55	**IZM67B3C-PG40FVM**	CAM-96250	**IZM67B4C-PG40FVM**	CAM-96251
Power mode LSI						
IZM65	400	66	**IZM65N3C-P04FHM**	CAM-95612	**IZM65N4C-P04FHM**	CAM-95624
	630	66	**IZM65N3C-P06FHM**	CAM-95613	**IZM65N4C-P06FHM**	CAM-95625
	800	66	**IZM65N3C-P08FHM**	CAM-95614	**IZM65N4C-P08FHM**	CAM-95626
	1000	66	**IZM65N3C-P10FHM**	CAM-95615	**IZM65N4C-P10FHM**	CAM-95627
	1250	66	**IZM65N3C-P12FHM**	CAM-95616	**IZM65N4C-P12FHM**	CAM-95628
	1600	66	**IZM65N3C-P16FHM**	CAM-95617	**IZM65N4C-P16FHM**	CAM-95629
	2000	66	**IZM65N3C-P20FHM**	CAM-95618	**IZM65N4C-P20FHM**	CAM-95630
	2500	66	**IZM65N3C-P25FHM**	CAM-95619	**IZM65N4C-P25FHM**	CAM-95631
IZM67	2000	66	**IZM67N3C-P20FHM**	CAM-95620	**IZM67N4C-P20FHM**	CAM-95632
	2500	66	**IZM67N3C-P25FHM**	CAM-95621	**IZM67N4C-P25FHM**	CAM-95633
	3200	66	**IZM67N3C-P32FHM**	CAM-95622	**IZM67N4C-P32FHM**	CAM-95634
	4000	66	**IZM67N3C-P40FHM**	CAM-95623	**IZM67N4C-P40FHM**	CAM-95635
	4000	66	**IZM67N3C-P40FVM**	CAM-96240	**IZM67N4C-P40FVM**	CAM-96241
Power mode LSIG						
IZM65	400	66	**IZM65N3C-PG04FHM**	CAM-95636	**IZM65N4C-PG04FHM**	CAM-95648
	630	66	**IZM65N3C-PG06FHM**	CAM-95637	**IZM65N4C-PG06FHM**	CAM-95649
	800	66	**IZM65N3C-PG08FHM**	CAM-95638	**IZM65N4C-PG08FHM**	CAM-95650
	1000	66	**IZM65N3C-PG10FHM**	CAM-95639	**IZM65N4C-PG10FHM**	CAM-95651
	1250	66	**IZM65N3C-PG12FHM**	CAM-95640	**IZM65N4C-PG12FHM**	CAM-95652
	1600	66	**IZM65N3C-PG16FHM**	CAM-95641	**IZM65N4C-PG16FHM**	CAM-95653
	2000	66	**IZM65N3C-PG20FHM**	CAM-95642	**IZM65N4C-PG20FHM**	CAM-95654
	2500	66	**IZM65N3C-PG25FHM**	CAM-95643	**IZM65N4C-PG25FHM**	CAM-95655
IZM67	2000	66	**IZM67N3C-PG20FHM**	CAM-95644	**IZM67N4C-PG20FHM**	CAM-95656
	2500	66	**IZM67N3C-PG25FHM**	CAM-95645	**IZM67N4C-PG25FHM**	CAM-95657
	3200	66	**IZM67N3C-PG32FHM**	CAM-95646	**IZM67N4C-PG32FHM**	CAM-95658
	4000	66	**IZM67N3C-PG40FHM**	CAM-95647	**IZM67N4C-PG40FHM**	CAM-95659
	4000	66	**IZM67N3C-PG40FVM**	CAM-96242	**IZM67N4C-PG40FVM**	CAM-96243

PT25 Trip Unit Manually Operated - Power Mode (LCD), Fixed Type

Power mode LSI			3P		4P	
Frame	**Rated current I_n (A)**	**Switching capacity I_{cu} (kA @690V AC)**	**Part No.**	**Article No.**	**Part No.**	**Article No.**
IZM67	2000	85	**IZM67S3C-P20FHM**	CAM-93458	**IZM67S4C-P20FHM**	CAM-93462
	2500	85	**IZM67S3C-P25FHM**	CAM-93459	**IZM67S4C-P25FHM**	CAM-93463
	3200	85	**IZM67S3C-P32FHM**	CAM-93460	**IZM67S4C-P32FHM**	CAM-93464
	4000	85	**IZM67S3C-P40FHM**	CAM-93461	**IZM67S4C-P40FHM**	CAM-93465
	4000	85	**IZM67S3C-P40FVM**	CAM-93558	**IZM67S4C-P40FVM**	CAM-93559
Power mode LSIG						
IZM67	2000	85	**IZM67S3C-PG20FHM**	CAM-93466	**IZM67S4C-PG20FHM**	CAM-93470
	2500	85	**IZM67S3C-PG25FHM**	CAM-93467	**IZM67S4C-PG25FHM**	CAM-93471
	3200	85	**IZM67S3C-PG32FHM**	CAM-93468	**IZM67S4C-PG32FHM**	CAM-93472
	4000	85	**IZM67S3C-PG40FHM**	CAM-93469	**IZM67S4C-PG40FHM**	CAM-93473
	4000	85	**IZM67S3C-PG40FVM**	CAM-93560	**IZM67S4C-PG40FVM**	CAM-93561

Manually Operated Devices Include:

Withdrawable circuit breaker's basic device, cassette, auxiliary contact (4CO), PT intelligent trip unit, over current trip switch OTS (1CO), door escutcheon, wiring terminal, 220V AC to DC24V power module, safety shutter, arc distinguishing cover, and handle.

PT10 Trip Unit Manually Operated - Current mode (Rotary Switch), Withdrawable Type

Current mode LSI			3P		4P	
Frame	**Rated current I_n (A)**	**Switching capacity I_{cu} (kA @690V AC)**	**Part No.**	**Article No.**	**Part No.**	**Article No.**
IZM65	400	55	**IZM65B3C-D04WHM**	CAM-95908	**IZM65B4C-D04WHM**	CAM-95920
	630	55	**IZM65B3C-D06WHM**	CAM-95909	**IZM65B4C-D06WHM**	CAM-95921
	800	55	**IZM65B3C-D08WHM**	CAM-95910	**IZM65B4C-D08WHM**	CAM-95922
	1000	55	**IZM65B3C-D10WHM**	CAM-95911	**IZM65B4C-D10WHM**	CAM-95923
	1250	55	**IZM65B3C-D12WHM**	CAM-95912	**IZM65B4C-D12WHM**	CAM-95924
	1600	55	**IZM65B3C-D16WHM**	CAM-95913	**IZM65B4C-D16WHM**	CAM-95925
	2000	55	**IZM65B3C-D20WHM**	CAM-95914	**IZM65B4C-D20WHM**	CAM-95926
	2500	55	**IZM65B3C-D25WHM**	CAM-95915	**IZM65B4C-D25WHM**	CAM-95927
IZM67	2000	55	**IZM67B3C-D20WHM**	CAM-95916	**IZM67B4C-D20WHM**	CAM-95928
	2500	55	**IZM67B3C-D25WHM**	CAM-95917	**IZM67B4C-D25WHM**	CAM-95929
	3200	55	**IZM67B3C-D32WHM**	CAM-95918	**IZM67B4C-D32WHM**	CAM-95930
	4000	55	**IZM67B3C-D40WHM**	CAM-95919	**IZM67B4C-D40WHM**	CAM-95931
	4000	55	**IZM67B3C-D40WVM**	CAM-96260	**IZM67B4C-D40WVM**	CAM-96261
Current mode LSIG						
IZM65	400	55	**IZM65B3C-DG04WHM**	CAM-95932	**IZM65B4C-DG04WHM**	CAM-95944
	630	55	**IZM65B3C-DG06WHM**	CAM-95933	**IZM65B4C-DG06WHM**	CAM-95945
	800	55	**IZM65B3C-DG08WHM**	CAM-95934	**IZM65B4C-DG08WHM**	CAM-95946
	1000	55	**IZM65B3C-DG10WHM**	CAM-95935	**IZM65B4C-DG10WHM**	CAM-95947
	1250	55	**IZM65B3C-DG12WHM**	CAM-95936	**IZM65B4C-DG12WHM**	CAM-95948
	1600	55	**IZM65B3C-DG16WHM**	CAM-95937	**IZM65B4C-DG16WHM**	CAM-95949
	2000	55	**IZM65B3C-DG20WHM**	CAM-95938	**IZM65B4C-DG20WHM**	CAM-95950
	2500	55	**IZM65B3C-DG25WHM**	CAM-95939	**IZM65B4C-DG25WHM**	CAM-95951
IZM67	2000	55	**IZM67B3C-DG20WHM**	CAM-95940	**IZM67B4C-DG20WHM**	CAM-95952
	2500	55	**IZM67B3C-DG25WHM**	CAM-95941	**IZM67B4C-DG25WHM**	CAM-95953
	3200	55	**IZM67B3C-DG32WHM**	CAM-95942	**IZM67B4C-DG32WHM**	CAM-95954
	4000	55	**IZM67B3C-DG40WHM**	CAM-95943	**IZM67B4C-DG40WHM**	CAM-95955
	4000	55	**IZM67B3C-DG40WVM**	CAM-96262	**IZM67B4C-DG40WVM**	CAM-96263
Current mode LSI						
IZM65	400	66	**IZM65N3C-D04WHM**	CAM-95812	**IZM65N4C-D04WHM**	CAM-95824
	630	66	**IZM65N3C-D06WHM**	CAM-95813	**IZM65N4C-D06WHM**	CAM-95825
	800	66	**IZM65N3C-D08WHM**	CAM-95814	**IZM65N4C-D08WHM**	CAM-95826
	1000	66	**IZM65N3C-D10WHM**	CAM-95815	**IZM65N4C-D10WHM**	CAM-95827
	1250	66	**IZM65N3C-D12WHM**	CAM-95816	**IZM65N4C-D12WHM**	CAM-95828
	1600	66	**IZM65N3C-D16WHM**	CAM-95817	**IZM65N4C-D16WHM**	CAM-95829
	2000	66	**IZM65N3C-D20WHM**	CAM-95818	**IZM65N4C-D20WHM**	CAM-95830
	2500	66	**IZM65N3C-D25WHM**	CAM-95819	**IZM65N4C-D25WHM**	CAM-95831
IZM67	2000	66	**IZM67N3C-D20WHM**	CAM-95820	**IZM67N4C-D20WHM**	CAM-95832
	2500	66	**IZM67N3C-D25WHM**	CAM-95821	**IZM67N4C-D25WHM**	CAM-95833
	3200	66	**IZM67N3C-D32WHM**	CAM-95822	**IZM67N4C-D32WHM**	CAM-95834
	4000	66	**IZM67N3C-D40WHM**	CAM-95823	**IZM67N4C-D40WHM**	CAM-95835
	4000	66	**IZM67N3C-D40WVM**	CAM-96252	**IZM67N4C-D40WVM**	CAM-96253
Current mode LSIG						
IZM65	400	66	**IZM65N3C-DG04WHM**	CAM-95836	**IZM65N4C-DG04WHM**	CAM-95848
	630	66	**IZM65N3C-DG06WHM**	CAM-95837	**IZM65N4C-DG06WHM**	CAM-95849
	800	66	**IZM65N3C-DG08WHM**	CAM-95838	**IZM65N4C-DG08WHM**	CAM-95850
	1000	66	**IZM65N3C-DG10WHM**	CAM-95839	**IZM65N4C-DG10WHM**	CAM-95851
	1250	66	**IZM65N3C-DG12WHM**	CAM-95840	**IZM65N4C-DG12WHM**	CAM-95852
	1600	66	**IZM65N3C-DG16WHM**	CAM-95841	**IZM65N4C-DG16WHM**	CAM-95853
	2000	66	**IZM65N3C-DG20WHM**	CAM-95842	**IZM65N4C-DG20WHM**	CAM-95854
	2500	66	**IZM65N3C-DG25WHM**	CAM-95843	**IZM65N4C-DG25WHM**	CAM-95855
IZM67	2000	66	**IZM67N3C-DG20WHM**	CAM-95844	**IZM67N4C-DG20WHM**	CAM-95856
	2500	66	**IZM67N3C-DG25WHM**	CAM-95845	**IZM67N4C-DG25WHM**	CAM-95857
	3200	66	**IZM67N3C-DG32WHM**	CAM-95846	**IZM67N4C-DG32WHM**	CAM-95858
	4000	66	**IZM67N3C-DG40WHM**	CAM-95847	**IZM67N4C-DG40WHM**	CAM-95859
	4000	66	**IZM67N3C-DG40WVM**	CAM-96254	**IZM67N4C-DG40WVM**	CAM-96255

PT10 Trip Unit Manually Operated - Current mode (Rotary Switch), Withdrawable Type

Current mode LSI			3P		4P	
Frame	**Rated current I_n (A)**	**Switching capacity I_{cu} (kA @690V AC)**	**Part No.**	**Article No.**	**Part No.**	**Article No.**
IZM67	2000	85	**IZM67S3C-D20WHM**	CAM-93474	**IZM67S4C-D20WHM**	CAM-93478
	2500	85	**IZM67S3C-D25WHM**	CAM-93475	**IZM67S4C-D25WHM**	CAM-93479
	3200	85	**IZM67S3C-D32WHM**	CAM-93476	**IZM67S4C-D32WHM**	CAM-93480
	4000	85	**IZM67S3C-D40WHM**	CAM-93477	**IZM67S4C-D40WHM**	CAM-93481
	4000	85	**IZM67S3C-D40WVM**	CAM-93562	**IZM67S4C-D40WVM**	CAM-93563
Current mode LSIG						
IZM67	2000	85	**IZM67S3C-DG20WHM**	CAM-93482	**IZM67S4C-DG20WHM**	CAM-93486
	2500	85	**IZM67S3C-DG25WHM**	CAM-93483	**IZM67S4C-DG25WHM**	CAM-93487
	3200	85	**IZM67S3C-DG32WHM**	CAM-93484	**IZM67S4C-DG32WHM**	CAM-93488
	4000	85	**IZM67S3C-DG40WHM**	CAM-93485	**IZM67S4C-DG40WHM**	CAM-93489
	4000	85	**IZM67S3C-DG40WVM**	CAM-93564	**IZM67S4C-DG40WVM**	CAM-93565

Manually Operated Devices Include:

Fixed circuit breaker's basic device, auxiliary contact (4CO), PT intelligent trip unit, over current trip switch OTS (1CO), door escutcheon, wiring terminal, 220V AC to DC24V power module, arc distinguishing cover, and handle.

PT10 Trip Unit Manually Operated - Current mode (Rotary Switch), Fixed Type

Current mode LSI			3P		4P	
Frame	**Rated current I_n (A)**	**Switching capacity I_{cu} (kA @690V AC)**	**Part No.**	**Article No.**	**Part No.**	**Article No.**
IZM65	400	55	**IZM65B3C-D04FHM**	CAM-95956	**IZM65B4C-D04FHM**	CAM-95968
	630	55	**IZM65B3C-D06FHM**	CAM-95957	**IZM65B4C-D06FHM**	CAM-95969
	800	55	**IZM65B3C-D08FHM**	CAM-95958	**IZM65B4C-D08FHM**	CAM-95970
	1000	55	**IZM65B3C-D10FHM**	CAM-95959	**IZM65B4C-D10FHM**	CAM-95971
	1250	55	**IZM65B3C-D12FHM**	CAM-95960	**IZM65B4C-D12FHM**	CAM-95972
	1600	55	**IZM65B3C-D16FHM**	CAM-95961	**IZM65B4C-D16FHM**	CAM-95973
	2000	55	**IZM65B3C-D20FHM**	CAM-95962	**IZM65B4C-D20FHM**	CAM-95974
	2500	55	**IZM65B3C-D25FHM**	CAM-95963	**IZM65B4C-D25FHM**	CAM-95975
IZM67	2000	55	**IZM67B3C-D20FHM**	CAM-95964	**IZM67B4C-D20FHM**	CAM-95976
	2500	55	**IZM67B3C-D25FHM**	CAM-95965	**IZM67B4C-D25FHM**	CAM-95977
	3200	55	**IZM67B3C-D32FHM**	CAM-95966	**IZM67B4C-D32FHM**	CAM-95978
	4000	55	**IZM67B3C-D40FHM**	CAM-95967	**IZM67B4C-D40FHM**	CAM-95979
	4000	55	**IZM67B3C-D40FVM**	CAM-96264	**IZM67B4C-D40FVM**	CAM-96265
Current mode LSIG						
IZM65	400	55	**IZM65B3C-DG04FHM**	CAM-95980	**IZM65B4C-DG04FHM**	CAM-95992
	630	55	**IZM65B3C-DG06FHM**	CAM-95981	**IZM65B4C-DG06FHM**	CAM-95993
	800	55	**IZM65B3C-DG08FHM**	CAM-95982	**IZM65B4C-DG08FHM**	CAM-95994
	1000	55	**IZM65B3C-DG10FHM**	CAM-95983	**IZM65B4C-DG10FHM**	CAM-95995
	1250	55	**IZM65B3C-DG12FHM**	CAM-95984	**IZM65B4C-DG12FHM**	CAM-95996
	1600	55	**IZM65B3C-DG16FHM**	CAM-95985	**IZM65B4C-DG16FHM**	CAM-95997
	2000	55	**IZM65B3C-DG20FHM**	CAM-95986	**IZM65B4C-DG20FHM**	CAM-95998
	2500	55	**IZM65B3C-DG25FHM**	CAM-95987	**IZM65B4C-DG25FHM**	CAM-95999
IZM67	2000	55	**IZM67B3C-DG20FHM**	CAM-95988	**IZM67B4C-DG20FHM**	CAM-96000
	2500	55	**IZM67B3C-DG25FHM**	CAM-95989	**IZM67B4C-DG25FHM**	CAM-96001
	3200	55	**IZM67B3C-DG32FHM**	CAM-95990	**IZM67B4C-DG32FHM**	CAM-96002
	4000	55	**IZM67B3C-DG40FHM**	CAM-95991	**IZM67B4C-DG40FHM**	CAM-96003
	4000	55	**IZM67B3C-DG40FVM**	CAM-96266	**IZM67B4C-DG40FVM**	CAM-96267
Current mode LSI						
IZM65	400	66	**IZM65N3C-D04FHM**	CAM-95860	**IZM65N4C-D04FHM**	CAM-95872
	630	66	**IZM65N3C-D06FHM**	CAM-95861	**IZM65N4C-D06FHM**	CAM-95873
	800	66	**IZM65N3C-D08FHM**	CAM-95862	**IZM65N4C-D08FHM**	CAM-95874
	1000	66	**IZM65N3C-D10FHM**	CAM-95863	**IZM65N4C-D10FHM**	CAM-95875
	1250	66	**IZM65N3C-D12FHM**	CAM-95864	**IZM65N4C-D12FHM**	CAM-95876
	1600	66	**IZM65N3C-D16FHM**	CAM-95865	**IZM65N4C-D16FHM**	CAM-95877
	2000	66	**IZM65N3C-D20FHM**	CAM-95866	**IZM65N4C-D20FHM**	CAM-95878
	2500	66	**IZM65N3C-D25FHM**	CAM-95867	**IZM65N4C-D25FHM**	CAM-95879
IZM67	2000	66	**IZM67N3C-D20FHM**	CAM-95868	**IZM67N4C-D20FHM**	CAM-95880
	2500	66	**IZM67N3C-D25FHM**	CAM-95869	**IZM67N4C-D25FHM**	CAM-95881
	3200	66	**IZM67N3C-D32FHM**	CAM-95870	**IZM67N4C-D32FHM**	CAM-95882
	4000	66	**IZM67N3C-D40FHM**	CAM-95871	**IZM67N4C-D40FHM**	CAM-95883
	4000	66	**IZM67N3C-D40FVM**	CAM-96256	**IZM67N4C-D40FVM**	CAM-96257
Current mode LSIG						
IZM65	400	66	**IZM65N3C-DG04FHM**	CAM-95884	**IZM65N4C-DG04FHM**	CAM-95896
	630	66	**IZM65N3C-DG06FHM**	CAM-95885	**IZM65N4C-DG06FHM**	CAM-95897
	800	66	**IZM65N3C-DG08FHM**	CAM-95886	**IZM65N4C-DG08FHM**	CAM-95898
	1000	66	**IZM65N3C-DG10FHM**	CAM-95887	**IZM65N4C-DG10FHM**	CAM-95899
	1250	66	**IZM65N3C-DG12FHM**	CAM-95888	**IZM65N4C-DG12FHM**	CAM-95900
	1600	66	**IZM65N3C-DG16FHM**	CAM-95889	**IZM65N4C-DG16FHM**	CAM-95901
	2000	66	**IZM65N3C-DG20FHM**	CAM-95890	**IZM65N4C-DG20FHM**	CAM-95902
	2500	66	**IZM65N3C-DG25FHM**	CAM-95891	**IZM65N4C-DG25FHM**	CAM-95903
IZM67	2000	66	**IZM67N3C-DG20FHM**	CAM-95892	**IZM67N4C-DG20FHM**	CAM-95904
	2500	66	**IZM67N3C-DG25FHM**	CAM-95893	**IZM67N4C-DG25FHM**	CAM-95905
	3200	66	**IZM67N3C-DG32FHM**	CAM-95894	**IZM67N4C-DG32FHM**	CAM-95906
	4000	66	**IZM67N3C-DG40FHM**	CAM-95895	**IZM67N4C-DG40FHM**	CAM-95907
	4000	66	**IZM67N3C-DG40FVM**	CAM-96258	**IZM67N4C-DG40FVM**	CAM-96259

PT10 Trip Unit Manually Operated - Current mode (Rotary Switch), Fixed Type

Current mode LSI			3P		4P	
Frame	**Rated current I_n (A)**	**Switching capacity I_{cu} (kA @690V AC)**	**Part No.**	**Article No.**	**Part No.**	**Article No.**
IZM67	2000	85	**IZM67S3C-D20FHM**	CAM-93490	**IZM67S4C-D20FHM**	CAM-93494
	2500	85	**IZM67S3C-D25FHM**	CAM-93491	**IZM67S4C-D25FHM**	CAM-93495
	3200	85	**IZM67S3C-D32FHM**	CAM-93492	**IZM67S4C-D32FHM**	CAM-93496
	4000	85	**IZM67S3C-D40FHM**	CAM-93493	**IZM67S4C-D40FHM**	CAM-93497
	4000	85	**IZM67S3C-D40FVM**	CAM-93566	**IZM67S4C-D40FVM**	CAM-93567
Current mode LSIG						
IZM67	2000	85	**IZM67S3C-DG20FHM**	CAM-93498	**IZM67S4C-DG20FHM**	CAM-93502
	2500	85	**IZM67S3C-DG25FHM**	CAM-93499	**IZM67S4C-DG25FHM**	CAM-93503
	3200	85	**IZM67S3C-DG32FHM**	CAM-93500	**IZM67S4C-DG32FHM**	CAM-93504
	4000	85	**IZM67S3C-DG40FHM**	CAM-93501	**IZM67S4C-DG40FHM**	CAM-93505
	4000	85	**IZM67S3C-DG40FVM**	CAM-93568	**IZM67S4C-DG40FVM**	CAM-93569

Manually Operated Devices Include:

Withdrawable circuit breaker's basic device, cassette, auxiliary contact (4CO), door escutcheon, wiring terminal, safety shutter, arc distinguishing cover, and handle.

Manually Operated Switch Disconnector, Withdrawable Type

			3P		4P	
Frame	**Rated current I_n (A)**	**Switching capacity I_{cw} (1s)**	**Part No.**	**Article No.**	**Part No.**	**Article No.**
IZM61	200	66	**IZM61N3C-02WHM**	CAM-96108	**IZM61N4C-02WHM**	CAM-96115
	400	66	**IZM61N3C-04WHM**	CAM-96109	**IZM61N4C-04WHM**	CAM-96116
	630	66	**IZM61N3C-06WHM**	CAM-96110	**IZM61N4C-06WHM**	CAM-96117
	800	66	**IZM61N3C-08WHM**	CAM-96111	**IZM61N4C-08WHM**	CAM-96118
	1000	66	**IZM61N3C-10WHM**	CAM-96112	**IZM61N4C-10WHM**	CAM-96119
	1250	66	**IZM61N3C-12WHM**	CAM-96113	**IZM61N4C-12WHM**	CAM-96120
	1600	66	**IZM61N3C-16WHM**	CAM-96114	**IZM61N4C-16WHM**	CAM-96121
IZM65	400	66	**IZM65N3C-04WHM**	CAM-96060	**IZM65N4C-04WHM**	CAM-96072
	630	66	**IZM65N3C-06WHM**	CAM-96061	**IZM65N4C-06WHM**	CAM-96073
	800	66	**IZM65N3C-08WHM**	CAM-96062	**IZM65N4C-08WHM**	CAM-96074
	1000	66	**IZM65N3C-10WHM**	CAM-96063	**IZM65N4C-10WHM**	CAM-96075
	1250	66	**IZM65N3C-12WHM**	CAM-96064	**IZM65N4C-12WHM**	CAM-96076
	1600	66	**IZM65N3C-16WHM**	CAM-96065	**IZM65N4C-16WHM**	CAM-96077
	2000	66	**IZM65N3C-20WHM**	CAM-96066	**IZM65N4C-20WHM**	CAM-96078
	2500	66	**IZM65N3C-25WHM**	CAM-96067	**IZM65N4C-25WHM**	CAM-96079
IZM67	2000	66	**IZM67N3C-20WHM**	CAM-96068	**IZM67N4C-20WHM**	CAM-96080
	2500	66	**IZM67N3C-25WHM**	CAM-96069	**IZM67N4C-25WHM**	CAM-96081
	3200	66	**IZM67N3C-32WHM**	CAM-96070	**IZM67N4C-32WHM**	CAM-96082
	4000	66	**IZM67N3C-40WHM**	CAM-96071	**IZM67N4C-40WHM**	CAM-96083
	4000	66	**IZM67N3C-40WVM**	CAM-96268	**IZM67N4C-40WVM**	CAM-96269
IZM67	2000	85	**IZM67S3C-20WHM**	CAM-93586	**IZM67S4C-20WHM**	CAM-93590
	2500	85	**IZM67S3C-25WHM**	CAM-93587	**IZM67S4C-25WHM**	CAM-93591
	3200	85	**IZM67S3C-32WHM**	CAM-93588	**IZM67S4C-32WHM**	CAM-93592
	4000	85	**IZM67S3C-40WHM**	CAM-93589	**IZM67S4C-40WHM**	CAM-93593
	4000	85	**IZM67S3C-40WVM**	CAM-93606	**IZM67S4C-40WVM**	CAM-93607

Manually Operated Devices Include:

Fixed circuit breaker's basic device, auxiliary contact (4CO), door escutcheon, wiring terminal, arc distinguishing cover, and handle.

Manually Operated Switch Disconnector, Fixed Type

			3P		4P	
Frame	**Rated current I_n (A)**	**Switching capacity I_{cw} (1s)**	**Part No.**	**Article No.**	**Part No.**	**Article No.**
IZM61	200	66	**IZM61N3C-02FHM**	CAM-96122	**IZM61N4C-02FHM**	CAM-96129
	400	66	**IZM61N3C-04FHM**	CAM-96123	**IZM61N4C-04FHM**	CAM-96130
	630	66	**IZM61N3C-06FHM**	CAM-96124	**IZM61N4C-06FHM**	CAM-96131
	800	66	**IZM61N3C-08FHM**	CAM-96125	**IZM61N4C-08FHM**	CAM-96132
	1000	66	**IZM61N3C-10FHM**	CAM-96126	**IZM61N4C-10FHM**	CAM-96133
	1250	66	**IZM61N3C-12FHM**	CAM-96127	**IZM61N4C-12FHM**	CAM-96134
	1600	66	**IZM61N3C-16FHM**	CAM-96128	**IZM61N4C-16FHM**	CAM-96135
IZM65	400	66	**IZM65N3C-04FHM**	CAM-96084	**IZM65N4C-04FHM**	CAM-96096
	630	66	**IZM65N3C-06FHM**	CAM-96085	**IZM65N4C-06FHM**	CAM-96097
	800	66	**IZM65N3C-08FHM**	CAM-96086	**IZM65N4C-08FHM**	CAM-96098
	1000	66	**IZM65N3C-10FHM**	CAM-96087	**IZM65N4C-10FHM**	CAM-96099
	1250	66	**IZM65N3C-12FHM**	CAM-96088	**IZM65N4C-12FHM**	CAM-96100
	1600	66	**IZM65N3C-16FHM**	CAM-96089	**IZM65N4C-16FHM**	CAM-96101
	2000	66	**IZM65N3C-20FHM**	CAM-96090	**IZM65N4C-20FHM**	CAM-96102
	2500	66	**IZM65N3C-25FHM**	CAM-96091	**IZM65N4C-25FHM**	CAM-96103
IZM67	2000	66	**IZM67N3C-20FHM**	CAM-96092	**IZM67N4C-20FHM**	CAM-96104
	2500	66	**IZM67N3C-25FHM**	CAM-96093	**IZM67N4C-25FHM**	CAM-96105
	3200	66	**IZM67N3C-32FHM**	CAM-96094	**IZM67N4C-32FHM**	CAM-96106
	4000	66	**IZM67N3C-40FHM**	CAM-96095	**IZM67N4C-40FHM**	CAM-96107
	4000	66	**IZM67N3C-40FVM**	CAM-96270	**IZM67N4C-40FVM**	CAM-96271
IZM67	2000	85	**IZM67S3C-20FHM**	CAM-93594	**IZM67S4C-20FHM**	CAM-93598
	2500	85	**IZM67S3C-25FHM**	CAM-93595	**IZM67S4C-25FHM**	CAM-93599
	3200	85	**IZM67S3C-32FHM**	CAM-93596	**IZM67S4C-32FHM**	CAM-93600
	4000	85	**IZM67S3C-40FHM**	CAM-93597	**IZM67S4C-40FHM**	CAM-93601
	4000	85	**IZM67S3C-40FVM**	CAM-93608	**IZM67S4C-40FVM**	CAM-93609

Power Loss Table of Motor Operator

Rated control voltage U_s (V)		**AC24/DC24**	**AC48/DC48**	**AC110/DC110**	**AC230/DC220**	**AC400**
Model code		M5	M4	M3	M1	M2
Actuating voltage		(0.85~1.1) U_s	(0.85~1.1) U_s	(0.85~1.1) U_s	(0.85~1.1) U_s	(0.85~1.1) U_s
Power loss	IZM61	80W	80W	80W	80VA	80VA
	IZM65/67	150W	150W	150W	150VA	150VA
Charging time (S)		5s	5s	5s	5s	5s

Motor Operator

The circuit breaker offers motor charging and automatic recharging functions (manual charging is also available for the circuit breaker).

	Rated control voltage U_s (V)	For use with	**Part No.** Article No.	**Part No.** Article No. "+" means ordering together with the basic device
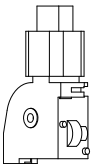	AC24/DC24	IZM61	**IZM61C-M-24AC/DC** CAM-51139	**+IZM61C-M-24AC/DC** CAM-31139
	AC48/DC48	IZM61	**IZM61C-M-48AC/DC** CAM-51140	**+IZM61C-M-48AC/DC** CAM-31140
	AC110/DC110	IZM61	**IZM61C-M-110AC/DC** CAM-51141	**+IZM61C-M-110AC/DC** CAM-31141
	AC230/DC220	IZM61	**IZM61C-M-230AC/220DC** CAM-51142	**+IZM61C-M-230AC/220DC** CAM-31142
	AC400	IZM61	**IZM61C-M-400AC** CAM-51143	**+IZM61C-M-400AC** CAM-31143
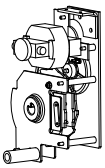	AC24/DC24	IZM65/67	**IZM6C-M-24AC/DC** CAM-51001	**+IZM6C-M-24AC/DC** CAM-31001
	AC48/DC48	IZM65/67	**IZM6C-M-48AC/DC** CAM-51002	**+IZM6C-M-48AC/DC** CAM-31002
	AC110/DC110	IZM65/67	**IZM6C-M-110AC/DC** CAM-51003	**+IZM6C-M-110AC/DC** CAM-31003
	AC230/DC220	IZM65/67	**IZM6C-M-230AC/220DC** CAM-51004	**+IZM6C-M-230AC/220DC** CAM-31004
	AC400	IZM65/67	**IZM6C-M-400AC** CAM-51005	**+IZM6C-M-400AC** CAM-31005

Power Loss Table of Closing Release

Insulation voltage (U_i)	Rated control voltage U_s (V)	Actuating voltage	Pickup transient current IZM61	Pickup transient current IZM65/67	Pickup transient power IZM61	Pickup transient power IZM65/67
400V	AC24/DC24	(0.85~1.1) U_s	2.5A	11A	60W	264W
	AC48/DC48	(0.85~1.1) U_s	4A	7.5A	190W	360W
	AC110/DC110	(0.85~1.1) U_s	2.5A	5.2A	270W	550VA
	AC230/DC220	(0.85~1.1) U_s	2.2A	2.5A	500W	550W
	AC400	(0.85~1.1) U_s	1.5A	2.1A	600W	780W

Closing releases

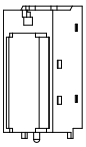

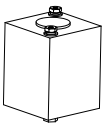

Rated control voltage U_s (V)	For use with	**Part No.** Article No.	**Part No.** Article No. "+" means ordering together with the basic device
AC24/DC24	IZM61	**IZM61C-SR-24AC/DC** CAM-51144	**+IZM61C-SR-24AC/DC** CAM-31144
AC48/DC48	IZM61	**IZM61C-SR-48AC/DC** CAM-51145	**+IZM61C-SR-48AC/DC** CAM-31145
AC110/DC110	IZM61	**IZM61C-SR-110AC/DC** CAM-51146	**+IZM61C-SR-110AC/DC** CAM-31146
AC230/DC220	IZM61	**IZM61C-SR-230AC/220DC** CAM-51147	**+IZM61C-SR-230AC/220DC** CAM-31147
AC400	IZM61	**IZM61C-SR-400AC** CAM-51148	**+IZM61C-SR-400AC** CAM-31148
AC24/DC24	IZM65/67	**IZM6C-SR-24AC/DC** CAM-51006	**+IZM6C-SR-24AC/DC** CAM-31006
AC48/DC48	IZM65/67	**IZM6C-SR-48AC/DC** CAM-51007	**+IZM6C-SR-48AC/DC** CAM-31007
AC110/DC110	IZM65/67	**IZM6C-SR-110AC/DC** CAM-51008	**+IZM6C-SR-110AC/DC** CAM-31008
AC230/DC220	IZM65/67	**IZM6C-SR-230AC/220DC** CAM-51009	**+IZM6C-SR-230AC/220DC** CAM-31009
AC400	IZM65/67	**IZM6C-SR-400AC** CAM-51010	**+IZM6C-SR-400AC** CAM-31010

Latch Check Switch (LCS)

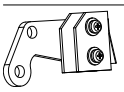

	For use with	**Part No.** Article No.	**Part No.** Article No. "+" means ordering together with the basic device
–	IZM61	**IZM61C-LCS** CAM-51215	**+IZM61C-LCS** CAM-31215
–	IZM65/67	**IZM6C-LCS** CAM-51086	**+IZM6C-LCS** CAM-31086

Notes: Factory mounting is recommended.

Power Loss Table of Shunt Release

Insulation voltage (U_i)	Rated control voltage U_s (V)	Actuating voltage	Pickup transient current IZM61	Pickup transient current IZM65/67	Pickup transient power IZM61	Pickup transient power IZM65/67
400V	AC24/DC24	(0.7~1.1) U_s	2.5A	11A	60W	264W
	AC48/DC48	(0.7~1.1) U_s	4A	7.5A	190W	360W
	AC110/DC110	(0.7~1.1) U_s	2.5A	5.2A	270W	550W
	AC230/DC220	(0.7~1.1) U_s	2.2A	2.5A	500W	550W
	AC400	(0.7~1.1) U_s	1.5A	2.1A	600W	780W

Shunt Release

Enables the circuit breaker to open remotely.

	Rated control voltage U_s (V)	For use with	**Part No.** Article No.	**Part No.** Article No. "+" means ordering together with the basic device
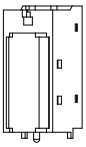	AC24/DC24	IZM61	**IZM61C-ST-24AC/DC** CAM-51149	**+IZM61C-ST-24AC/DC** CAM-31149
	AC48/DC48	IZM61	**IZM61C-ST-48AC/DC** CAM-51150	**+IZM61C-ST-48AC/DC** CAM-31150
	AC110/DC110	IZM61	**IZM61C-ST-110AC/DC** CAM-51151	**+IZM61C-ST-110AC/DC** CAM-31151
	AC230/DC220	IZM61	**IZM61C-ST-230AC/220DC** CAM-51152	**+IZM61C-ST-230AC/220DC** CAM-31152
	AC400	IZM61	**IZM61C-ST-400AC** CAM-51153	**+IZM61C-ST-400AC** CAM-31153
	AC24/DC24	IZM65/67	**IZM6C-ST-24AC/DC** CAM-51011	**+IZM6C-ST-24AC/DC** CAM-31011
	AC48/DC48	IZM65/67	**IZM6C-ST-48AC/DC** CAM-51012	**+IZM6C-ST-48AC/DC** CAM-31012
	AC110/DC110	IZM65/67	**IZM6C-ST-110AC/DC** CAM-51013	**+IZM6C-ST-110AC/DC** CAM-31013
	AC230/DC220	IZM65/67	**IZM6C-ST-230AC/220DC** CAM-51014	**+IZM6C-ST-230AC/220DC** CAM-31014
	AC400	IZM65/67	**IZM6C-ST-400AC** CAM-51015	**+IZM6C-ST-400AC** CAM-31015
	Second shunt release The Second shunt release cannot be equipped together with under/no voltage release. The operating counter can be equipped together.			
	AC24/DC24	IZM61	**IZM61C-ST-24AC/DC-2** CAM-51154	**+IZM61C-ST-24AC/DC-2** CAM-31154
	AC48/DC48	IZM61	**IZM61C-ST-48AC/DC-2** CAM-51155	**+IZM61C-ST-48AC/DC-2** CAM-31155
	AC110/DC110	IZM61	**IZM61C-ST-110AC/DC-2** CAM-51156	**+IZM61C-ST-110AC/DC-2** CAM-31156
	AC230/DC220	IZM61	**IZM61C-ST-230AC/220DC-2** CAM-51157	**+IZM61C-ST-230AC/220DC-2** CAM-31157
	AC400	IZM61	**IZM61C-ST-400AC-2** CAM-51158	**+IZM61C-ST-400AC-2** CAM-31158
	AC24/DC24	IZM65/67	**IZM6C-ST-24AC/DC-2** CAM-51016	**+IZM6C-ST-24AC/DC-2** CAM-31016
	AC48/DC48	IZM65/67	**IZM6C-ST-48AC/DC-2** CAM-51017	**+IZM6C-ST-48AC/DC-2** CAM-31017
	AC110/DC110	IZM65/67	**IZM6C-ST-110AC/DC-2** CAM-51018	**+IZM6C-ST-110AC/DC-2** CAM-31018
	AC230/DC220	IZM65/67	**IZM6C-ST-230AC/220DC-2** CAM-51019	**+IZM6C-ST-230AC/220DC-2** CAM-31019
	AC400	IZM65/67	**IZM6C-ST-400AC-2** CAM-51020	**+IZM6C-ST-400AC-2** CAM-31020

Power Loss Table of External Auxiliary Contact

	Rated control voltage U_e (V)	Rated control capacity	Conventional thermal current I_{th} (A)
External auxiliary contact	AC230	800VA	16
	AC400		
	DC110	300W	
	DC220		

External Auxiliary Contact

The standard style of embedded auxiliary contacts provided in IZM6 is 4CO; when more than 4CO, external auxiliary contact will be needed, with the maximum number of 10CO. The external auxiliary contact cannot be equipped with mechanical interlocking.

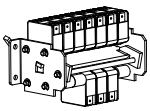

Rated control voltage U_s (V)	For use with	**Part No.** Article No.	**Part No.** Article No. "+" means ordering together with the basic device
Withdrawable type			
External 2CO	IZM61	**IZM61C-AS22-W** CAM-51216	**+IZM61C-AS22-W** CAM-31216
External 4CO	IZM61	**IZM61C-AS44-W** CAM-51217	**+IZM61C-AS44-W** CAM-31217
External 6CO	IZM61	**IZM61C-AS66-W** CAM-51218	**+IZM61C-AS66-W** CAM-31218
External 8CO	IZM61	**IZM61C-AS88-W** CAM-51219	**+IZM61C-AS88-W** CAM-31219
External 10CO	IZM61	**IZM61C-AS1010-W** CAM-51220	**+IZM61C-AS1010-W** CAM-31220
External 2CO	IZM65/67	**IZM6C-AS22-W** CAM-51087	**+IZM6C-AS22-W** CAM-31087
External 4CO	IZM65/67	**IZM6C-AS44-W** CAM-51088	**+IZM6C-AS44-W** CAM-31088
External 6CO	IZM65/67	**IZM6C-AS66-W** CAM-51089	**+IZM6C-AS66-W** CAM-31089
External 8CO	IZM65/67	**IZM6C-AS88-W** CAM-51090	**+IZM6C-AS88-W** CAM-31090
External 10CO	IZM65/67	**IZM6C-AS1010-W** CAM-51091	**+IZM6C-AS1010-W** CAM-31091
Fixed type			
External 2CO	IZM61	**IZM61C-AS22-F** CAM-51221	**+IZM61C-AS22-F** CAM-31221
External 4CO	IZM61	**IZM61C-AS44-F** CAM-51222	**+IZM61C-AS44-F** CAM-31222
External 6CO	IZM61	**IZM61C-AS66-F** CAM-51223	**+IZM61C-AS66-F** CAM-31223
External 8CO	IZM61	**IZM61C-AS88-F** CAM-51224	**+IZM61C-AS88-F** CAM-31224
External 10CO	IZM61	**IZM61C-AS1010-F** CAM-51225	**+IZM61C-AS1010-F** CAM-31225
External 2CO	IZM65/67	**IZM6C-AS22-F** CAM-51092	**+IZM6C-AS22-F** CAM-31092
External 4CO	IZM65/67	**IZM6C-AS44-F** CAM-51093	**+IZM6C-AS44-F** CAM-31093
External 6CO	IZM65/67	**IZM6C-AS66-F** CAM-51094	**+IZM6C-AS66-F** CAM-31094
External 8CO	IZM65/67	**IZM6C-AS88-F** CAM-51095	**+IZM6C-AS88-F** CAM-31095
External 10CO	IZM65/67	**IZM6C-AS1010-F** CAM-51096	**+IZM6C-AS1010-F** CAM-31096

Power Loss Table of Under Voltage Release

Rated operational voltage U_e (V)		AC24/DC24	AC48/DC48	AC110/DC110	AC230/DC220	AC400
Actuating voltage (V)		(0.35-0.7) U_e				
Reliable closing voltage (V)		(0.85-1.1) U_e				
Reliable no-closing voltage (V)		≤ 0.35 U_e				
Pickup power loss	IZM61	263W	331W	773W	570W	408W
	IZM65/67	228W	269W	220W	456W	508W
Maintained power loss	IZM61	2.2W	2.62W	2.8W	4W	3.5W
	IZM65/67	5.7W	6.2W	8.6W	4.2W	6.6W

Under Voltage Release

The under/no voltage release and Operation counter or the Second shunt release cannot be equipped at the same time.

	Rated control voltage U_s (V)	For use with	**Part No.** Article No.	**Part No.** Article No. "+" means ordering together with the basic device
	Under voltage instantaneous			
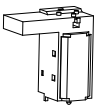	AC24/DC24	IZM61	**IZM61C-UVR-24AC/DC** CAM-51159	**+IZM61C-UVR-24AC/DC** CAM-31159
	AC48/DC48	IZM61	**IZM61C-UVR-48AC/DC** CAM-51160	**+IZM61C-UVR-48AC/DC** CAM-31160
	AC110/DC110	IZM61	**IZM61C-UVR-110AC/DC** CAM-51161	**+IZM61C-UVR-110AC/DC** CAM-31161
	AC230/DC220	IZM61	**IZM61C-UVR-230AC/220DC** CAM-51162	**+IZM61C-UVR-230AC/220DC** CAM-31162
	AC400	IZM61	**IZM61C-UVR-400AC** CAM-51163	**+IZM61C-UVR-400AC** CAM-31163
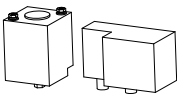	AC24/DC24	IZM65/67	**IZM6C-UVR-24AC/DC** CAM-51021	**+IZM6C-UVR-24AC/DC** CAM-31021
	AC48/DC48	IZM65/67	**IZM6C-UVR-48AC/DC** CAM-51022	**+IZM6C-UVR-48AC/DC** CAM-31022
	AC110/DC110	IZM65/67	**IZM6C-UVR-110AC/DC** CAM-51023	**+IZM6C-UVR-110AC/DC** CAM-31023
	AC230/DC220	IZM65/67	**IZM6C-UVR-230AC/220DC** CAM-51024	**+IZM6C-UVR-230AC/220DC** CAM-31024
	AC400	IZM65/67	**IZM6C-UVR-400AC** CAM-51025	**+IZM6C-UVR-400AC** CAM-31025

Under Voltage Release

Rated control voltage U_s (V)	For use with	Delay time	**Part No.** Article No.	**Part No.** Article No. "+" means ordering together with the basic device
Under voltage with time delay function				
AC24/DC24	IZM61	0.3s	**IZM61C-UVR-TD03-24AC/DC** CAM-51164	**+IZM61C-UVR-TD03-24AC/DC** CAM-31164
		0.5s	**IZM61C-UVR-TD05-24AC/DC** CAM-51165	**+IZM61C-UVR-TD05-24AC/DC** CAM-31165
		0.7s	**IZM61C-UVR-TD07-24AC/DC** CAM-51166	**+IZM61C-UVR-TD07-24AC/DC** CAM-31166
		1s	**IZM61C-UVR-TD1-24AC/DC** CAM-51167	**+IZM61C-UVR-TD1-24AC/DC** CAM-31167
		3s	**IZM61C-UVR-TD3-24AC/DC** CAM-51168	**+IZM61C-UVR-TD3-24AC/DC** CAM-31168
		5s	**IZM61C-UVR-TD5-24AC/DC** CAM-51169	**+IZM61C-UVR-TD5-24AC/DC** CAM-31169
		10s	**IZM61C-UVR-TD10-24AC/DC** CAM-51170	**+IZM61C-UVR-TD10-24AC/DC** CAM-31170
AC48/DC48	IZM61	0.3s	**IZM61C-UVR-TD03-48AC/DC** CAM-51171	**+IZM61C-UVR-TD03-48AC/DC** CAM-31171
		0.5s	**IZM61C-UVR-TD05-48AC/DC** CAM-51172	**+IZM61C-UVR-TD05-48AC/DC** CAM-31172
		0.7s	**IZM61C-UVR-TD07-48AC/DC** CAM-51173	**+IZM61C-UVR-TD07-48AC/DC** CAM-31173
		1s	**IZM61C-UVR-TD1-48AC/DC** CAM-51174	**+IZM61C-UVR-TD1-48AC/DC** CAM-31174
		3s	**IZM61C-UVR-TD3-48AC/DC** CAM-51175	**+IZM61C-UVR-TD3-48AC/DC** CAM-31175
		5s	**IZM61C-UVR-TD5-48AC/DC** CAM-51176	**+IZM61C-UVR-TD5-48AC/DC** CAM-31176
		10s	**IZM61C-UVR-TD10-48AC/DC** CAM-51177	**+IZM61C-UVR-TD10-48AC/DC** CAM-31177
AC110/DC110	IZM61	0.3s	**IZM61C-UVR-TD03-110AC/DC** CAM-51178	**+IZM61C-UVR-TD03-110AC/DC** CAM-31178
		0.5s	**IZM61C-UVR-TD05-110AC/DC** CAM-51179	**+IZM61C-UVR-TD05-110AC/DC** CAM-31179
		0.7s	**IZM61C-UVR-TD07-110AC/DC** CAM-51180	**+IZM61C-UVR-TD07-110AC/DC** CAM-31180
		1s	**IZM61C-UVR-TD1-110AC/DC** CAM-51181	**+IZM61C-UVR-TD1-110AC/DC** CAM-31181
		3s	**IZM61C-UVR-TD3-110AC/DC** CAM-51182	**+IZM61C-UVR-TD3-110AC/DC** CAM-31182
		5s	**IZM61C-UVR-TD5-110AC/DC** CAM-51183	**+IZM61C-UVR-TD5-110AC/DC** CAM-31183
		10s	**IZM61C-UVR-TD10-110AC/DC** CAM-51184	**+IZM61C-UVR-TD10-110AC/DC** CAM-31184
AC230/DC220	IZM61	0.3s	**IZM61C-UVR-TD03-230AC/220DC** CAM-51185	**+IZM61C-UVR-TD03-230AC/220DC** CAM-31185
		0.5s	**IZM61C-UVR-TD05-230AC/220DC** CAM-51186	**+IZM61C-UVR-TD05-230AC/220DC** CAM-31186
		0.7s	**IZM61C-UVR-TD07-230AC/220DC** CAM-51187	**+IZM61C-UVR-TD07-230AC/220DC** CAM-31187
		1s	**IZM61C-UVR-TD1-230AC/220DC** CAM-51188	**+IZM61C-UVR-TD1-230AC/220DC** CAM-31188
		3s	**IZM61C-UVR-TD3-230AC/220DC** CAM-51189	**+IZM61C-UVR-TD3-230AC/220DC** CAM-31189
		5s	**IZM61C-UVR-TD5-230AC/220DC** CAM-51190	**+IZM61C-UVR-TD5-230AC/220DC** CAM-31190
		10s	**IZM61C-UVR-TD10-230AC/220DC** CAM-51191	**+IZM61C-UVR-TD10-230AC/220DC** CAM-31191

Under Voltage Release

	Rated control voltage U_s (V)	For use with	Delay time	**Part No.** Article No.	**Part No.** Article No. "+" means ordering together with the basic device
	Under voltage with time delay function				
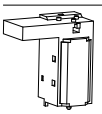	AC400	IZM61	0.3s	**IZM61C-UVR-TD03-400AC** CAM-51192	**+IZM61C-UVR-TD03-400AC** CAM-31192
			0.5s	**IZM61C-UVR-TD05-400AC** CAM-51193	**+IZM61C-UVR-TD05-400AC** CAM-31193
			0.7s	**IZM61C-UVR-TD07-400AC** CAM-51194	**+IZM61C-UVR-TD07-400AC** CAM-31194
			1s	**IZM61C-UVR-TD1-400AC** CAM-51195	**+IZM61C-UVR-TD1-400AC** CAM-31195
			3s	**IZM61C-UVR-TD3-400AC** CAM-51196	**+IZM61C-UVR-TD3-400AC** CAM-31196
			5s	**IZM61C-UVR-TD5-400AC** CAM-51197	**+IZM61C-UVR-TD5-400AC** CAM-31197
			10s	**IZM61C-UVR-TD10-400AC** CAM-51198	**+IZM61C-UVR-TD10-400AC** CAM-31198
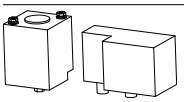	AC24/DC24	IZM65/67	0.3s	**IZM6C-UVR-TD03-24AC/DC** CAM-51026	**+IZM6C-UVR-TD03-24AC/DC** CAM-31026
			0.5s	**IZM6C-UVR-TD05-24AC/DC** CAM-51027	**+IZM6C-UVR-TD05-24AC/DC** CAM-31027
			0.7s	**IZM6C-UVR-TD07-24AC/DC** CAM-51028	**+IZM6C-UVR-TD07-24AC/DC** CAM-31028
			1s	**IZM6C-UVR-TD1-24AC/DC** CAM-51029	**+IZM6C-UVR-TD1-24AC/DC** CAM-31029
			3s	**IZM6C-UVR-TD3-24AC/DC** CAM-51030	**+IZM6C-UVR-TD3-24AC/DC** CAM-31030
			5s	**IZM6C-UVR-TD5-24AC/DC** CAM-51031	**+IZM6C-UVR-TD5-24AC/DC** CAM-31031
			10s	**IZM6C-UVR-TD10-24AC/DC** CAM-51032	**+IZM6C-UVR-TD10-24AC/DC** CAM-31032
	AC48/DC48	IZM65/67	0.3s	**IZM6C-UVR-TD03-48AC/DC** CAM-51033	**+IZM6C-UVR-TD03-48AC/DC** CAM-31033
			0.5s	**IZM6C-UVR-TD05-48AC/DC** CAM-51034	**+IZM6C-UVR-TD05-48AC/DC** CAM-31034
			0.7s	**IZM6C-UVR-TD07-48AC/DC** CAM-51035	**+IZM6C-UVR-TD07-48AC/DC** CAM-31035
			1s	**IZM6C-UVR-TD1-48AC/DC** CAM-51036	**+IZM6C-UVR-TD1-48AC/DC** CAM-31036
			3s	**IZM6C-UVR-TD3-48AC/DC** CAM-51037	**+IZM6C-UVR-TD3-48AC/DC** CAM-31037
			5s	**IZM6C-UVR-TD5-48AC/DC** CAM-51038	**+IZM6C-UVR-TD5-48AC/DC** CAM-31038
			10s	**IZM6C-UVR-TD10-48AC/DC** CAM-51039	**+IZM6C-UVR-TD10-48AC/DC** CAM-31039
	AC110/DC110	IZM65/67	0.3s	**IZM6C-UVR-TD03-110AC/DC** CAM-51040	**+IZM6C-UVR-TD03-110AC/DC** CAM-31040
			0.5s	**IZM6C-UVR-TD05-110AC/DC** CAM-51041	**+IZM6C-UVR-TD05-110AC/DC** CAM-31041
			0.7s	**IZM6C-UVR-TD07-110AC/DC** CAM-51042	**+IZM6C-UVR-TD07-110AC/DC** CAM-31042
			1s	**IZM6C-UVR-TD1-110AC/DC** CAM-51043	**+IZM6C-UVR-TD1-110AC/DC** CAM-31043
			3s	**IZM6C-UVR-TD3-110AC/DC** CAM-51044	**+IZM6C-UVR-TD3-110AC/DC** CAM-31044
			5s	**IZM6C-UVR-TD5-110AC/DC** CAM-51045	**+IZM6C-UVR-TD5-110AC/DC** CAM-31045
			10s	**IZM6C-UVR-TD10-110AC/DC** CAM-51046	**+IZM6C-UVR-TD10-110AC/DC** CAM-31046

Under Voltage Release

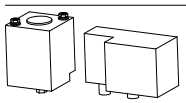

Rated control voltage U_s (V)	For use with	Delay time	**Part No.** Article No.	**Part No.** Article No. "+" means ordering together with the basic device
Under voltage with time delay function				
AC230/DC220	IZM65/67	0.3s	**IZM6C-UVR-TD03-230AC/220DC** CAM-51047	**+IZM6C-UVR-TD03-230AC/220DC** CAM-31047
		0.5s	**IZM6C-UVR-TD05-230AC/220DC** CAM-51048	**+IZM6C-UVR-TD05-230AC/220DC** CAM-31048
		0.7s	**IZM6C-UVR-TD07-230AC/220DC** CAM-51049	**+IZM6C-UVR-TD07-230AC/220DC** CAM-31049
		1s	**IZM6C-UVR-TD1-230AC/220DC** CAM-51050	**+IZM6C-UVR-TD1-230AC/220DC** CAM-31050
		3s	**IZM6C-UVR-TD3-230AC/220DC** CAM-51051	**+IZM6C-UVR-TD3-230AC/220DC** CAM-31051
		5s	**IZM6C-UVR-TD5-230AC/220DC** CAM-51052	**+IZM6C-UVR-TD5-230AC/220DC** CAM-31052
		10s	**IZM6C-UVR-TD10-230AC/220DC** CAM-51053	**+IZM6C-UVR-TD10-230AC/220DC** CAM-31053
AC400	IZM65/67	0.3s	**IZM6C-UVR-TD03-400AC** CAM-51054	**+IZM6C-UVR-TD03-400AC** CAM-31054
		0.5s	**IZM6C-UVR-TD05-400AC** CAM-51055	**+IZM6C-UVR-TD05-400AC** CAM-31055
		0.7s	**IZM6C-UVR-TD07-400AC** CAM-51056	**+IZM6C-UVR-TD07-400AC** CAM-31056
		1s	**IZM6C-UVR-TD1-400AC** CAM-51057	**+IZM6C-UVR-TD1-400AC** CAM-31057
		3s	**IZM6C-UVR-TD3-400AC** CAM-51058	**+IZM6C-UVR-TD3-400AC** CAM-31058
		5s	**IZM6C-UVR-TD5-400AC** CAM-51059	**+IZM6C-UVR-TD5-400AC** CAM-31059
		10s	**IZM6C-UVR-TD10-400AC** CAM-51060	**+IZM6C-UVR-TD10-400AC** CAM-31060

Power Loss Table of No Voltage Release

Rated operational voltage U_e (V)		AC24/DC24	AC110/DC110	AC230/DC220	AC400
Actuating voltage (V)		(0.1-0.35) U_e			
Reliable closing voltage (V)		(0.85-1.1) U_e			
Reliable no-closing voltage (V)		≤ 0.35 U_e			
Pickup power loss	IZM61	/	/	200W	220W
	IZM65/67	140W	117W	81W	200W
Maintained power loss	IZM61	/	/	3.5W	3.3W
	IZM65/67	2.9W	2.5W	2.5W	2W

No Voltage Release

The under/no voltage release and Operation counter or the Second shunt release cannot be equipped at the same time.

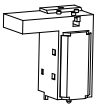

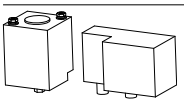

Rated control voltage U_s (V)	For use with	**Part No.** Article No.	**Part No.** Article No. "+" means ordering together with the basic device
No voltage instantaneous			
AC230/DC220	IZM61	**IZM61C-NVR-230AC/220DC** CAM-51199	**+IZM61C-NVR-230AC/220DC** CAM-31199
AC400	IZM61	**IZM61C-NVR-400AC** CAM-51200	**+IZM61C-NVR-400AC** CAM-31200
AC24/DC24	IZM65/67	**IZM6C-NVR-24AC/DC** CAM-51061	**+IZM6C-NVR-24AC/DC** CAM-31061
AC110/DC110	IZM65/67	**IZM6C-NVR-110AC/DC** CAM-51062	**+IZM6C-NVR-110AC/DC** CAM-31062
AC230/DC220	IZM65/67	**IZM6C-NVR-230AC/220DC** CAM-51063	**+IZM6C-NVR-230AC/220DC** CAM-31063
AC400	IZM65/67	**IZM6C-NVR-400AC** CAM-51064	**+IZM6C-NVR-400AC** CAM-31064

No Voltage Release

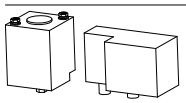

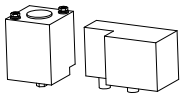

Rated control voltage U_s (V)	For use with	Delay time	**Part No.** Article No.	**Part No.** Article No. "+" means ordering together with the basic device
No voltage with time delay function				
230VAC	IZM65/67	0.3s	**IZM6C-NVR-TD03-230AC/220DC** CAM-51071	**+IZM6C-NVR-TD03-230AC/220DC** CAM-31071
		0.5s	**IZM6C-NVR-TD05-230AC/220DC** CAM-51072	**+IZM6C-NVR-TD05-230AC/220DC** CAM-31072
		0.7s	**IZM6C-NVR-TD07-230AC/220DC** CAM-51073	**+IZM6C-NVR-TD07-230AC/220DC** CAM-31073
		1s	**IZM6C-NVR-TD1-230AC/220DC** CAM-51074	**+IZM6C-NVR-TD1-230AC/220DC** CAM-31074
		3s	**IZM6C-NVR-TD3-230AC/220DC** CAM-51075	**+IZM6C-NVR-TD3-230AC/220DC** CAM-31075
		5s	**IZM6C-NVR-TD5-230AC/220DC** CAM-51076	**+IZM6C-NVR-TD5-230AC/220DC** CAM-31076
400VAC	IZM65/67	0.3s	**IZM6C-NVR-TD03-400AC** CAM-51077	**+IZM6C-NVR-TD03-400AC** CAM-31077
		0.5s	**IZM6C-NVR-TD05-400AC** CAM-51078	**+IZM6C-NVR-TD05-400AC** CAM-31078
		0.7s	**IZM6C-NVR-TD07-400AC** CAM-51079	**+IZM6C-NVR-TD07-400AC** CAM-31079
		1s	**IZM6C-NVR-TD1-400AC** CAM-51080	**+IZM6C-NVR-TD1-400AC** CAM-31080
		3s	**IZM6C-NVR-TD3-400AC** CAM-51081	**+IZM6C-NVR-TD3-400AC** CAM-31081
		5s	**IZM6C-NVR-TD5-400AC** CAM-51082	**+IZM6C-NVR-TD5-400AC** CAM-31082

OFF Position Safety Lock

The OFF position safety lock can secure the opening button of the circuit breaker in the depressed position.
One lock and one key: A circuit breaker is equipped with one lock and one key. The circuit breaker is not allowed to close in the locked state.
Three locks and two keys: Three circuit breakers are equipped with three identical locks and two keys, and only two circuit breakers are allowed to close.

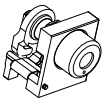

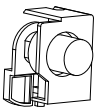

Lock type	For use with	**Part No.** Article No.	**Part No.** Article No. "+" means ordering together with the basic device
One lock/one key	IZM61	**IZM61C-1L1K-A** CAM-51227	**+IZM61C-1L1K-A** CAM-31227
	IZM61	**IZM61C-1L1K-B** CAM-51228	**+IZM61C-1L1K-B** CAM-31228
	IZM61	**IZM61C-1L1K-C** CAM-51229	**+IZM61C-1L1K-C** CAM-31229
Three locks/two keys	IZM61	**IZM61C-3L2K-A** CAM-51230	**+IZM61C-3L2K-A** CAM-31230
	IZM61	**IZM61C-3L2K-B** CAM-51231	**+IZM61C-3L2K-B** CAM-31231
	IZM61	**IZM61C-3L2K-C** CAM-51232	**+IZM61C-3L2K-C** CAM-31232
One lock/one key	IZM65/67	**IZM6C-1L1K-A** CAM-51099	**+IZM6C-1L1K-A** CAM-31099
	IZM65/67	**IZM6C-1L1K-B** CAM-51100	**+IZM6C-1L1K-B** CAM-31100
	IZM65/67	**IZM6C-1L1K-C** CAM-51101	**+IZM6C-1L1K-C** CAM-31101
Three locks/two keys	IZM65/67	**IZM6C-3L2K-A** CAM-51102	**+IZM6C-3L2K-A** CAM-31102
	IZM65/67	**IZM6C-3L2K-B** CAM-51103	**+IZM6C-3L2K-B** CAM-31103
	IZM65/67	**IZM6C-3L2K-C** CAM-51104	**+IZM6C-3L2K-C** CAM-31104

Notes: Factory mounting is recommended (free of charge). Please specify in the order on which model's basic device the lock is mounted. Eaton's on-site installation service requires additional charge. Please contact Eaton's sales representative for details prior to ordering.

Open/Close Door Interlock Kit

The door is not allowed to open when the circuit breaker is in the working or experimental position: the door is open and the circuit breaker is in the connected position, and the door can be closed without disconnecting the circuit breaker.

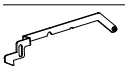

Lock type	For use with	**Part No.** Article No. "+" means ordering together with the basic device
Open/Close Door Interlock Kit	IZM65/67	**+IZM6C-DI** CAM-31265

Locking ON/OFF Button

Only lock plates are provided, with no locks included.

	For use with	**Part No.** Article No.	**Part No.** Article No. "+" means ordering together with the basic device
–	IZM65/67	**IZM6C-PLPC** CAM-51098	**+IZM6C-PLPC** CAM-31098

Notes: Factory mounting is recommended (free of charge). Please specify in the order on which model's basic device the lock is mounted. Eaton's on-site installation service requires additional charge. Please contact Eaton's sales representative for details prior to ordering.

Operation Counter

Cannot be assembled with Under/No voltage release at the same time.

	For use with	**Part No.** Article No.	**Part No.** Article No. "+" means ordering together with the basic device
–	IZM65/67	**IZM6C-OC** CAM-51125	**+IZM6C-OC** CAM-31125

Position Cell Switch

Three sets of contacts are available to indicate the current position of the circuit breaker (Connected, Test, Disconnected). When the circuit breaker is in a certain position, the corresponding contact will be switched on.

	For use with	**Part No.** Article No.	**Part No.** Article No. "+" means ordering together with the basic device
Position cell switch, withdrawable circuit breaker	IZM61	**IZM61C-CS** CAM-51226	**+IZM61C-CS** CAM-31226
	IZM65/67	**IZM6C-CS** CAM-51097	**+IZM6C-CS** CAM-31097

Overcurrent Trip Switch (OTS)

It cannot be installed separately and needs to be purchased together with the basic device.

	For use with	**Part No.** Article No. "+" means ordering together with the basic device
–	IZM61	**+IZM61C-OTS** CAM-31214
	IZM65/67	**+IZM6C-OTS** CAM-31084

Remote Reset

It cannot be mounted separately and needs to be purchased together with the basic device.

	For use with	**Part No.** Article No. "+" means ordering together with the basic device
–	IZM65/67	**+IZM6C-RR230AC** CAM-31085

Mechanical Interlock

Cannot be equipped with external auxiliary contacts at the same time.
Cable length is 2000mm.
One material number corresponds to a set of mechanical interlocks.

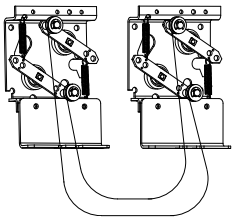

	For use with	**Part No.** Article No.
Mechanical interlock, fixed mounting		
Interlocking for 2 circuit breakers: A normal power supply (A) and an emergency power supply (B). 1 set of cables is included.	IZM61...F	**IZM61C-MIL2C-F** CAM-51233
	IZM65,67...F	**IZM6C-MIL2C-F** CAM-51105
Type 31, for 3 circuit breakers: Two normal power supplies (A, C) and an emergency power supply (B). When B in OFF, A and C can be switched on. B can be switched on only when A and C are in OFF. Two sets of cables are included.	IZM61...F	**IZM61C-MIL31C-F** CAM-51234
	IZM65,67...F	**IZM6C-MIL31C-F** CAM-51106
Type 32, for 3 circuit breakers: Two normal power supplies (A, C) and a bus coupling circuit breaker (B). Any one or two circuit breakers can be closed at the same time. Three sets of cables are included.	IZM61...F	**IZM61C-MIL32C-F** CAM-51235
	IZM65,67...F	**IZM6C-MIL32C-F** CAM-51107

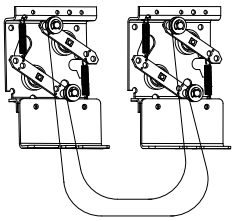

Mechanical interlock, withdrawable mounting		
Interlocking for 2 circuit breakers: A normal power supply (A) and an emergency power supply (B). 1 set of cables is included.	IZM61...W	**IZM61C-MIL2C-W** CAM-51236
	IZM65,67...W	**IZM6C-MIL2C-W** CAM-51108
Type 31, for 3 circuit breakers: Two normal power supplies (A, C) and an emergency power supply (B). When B in OFF, A and C can be switched on. B can be switched on only when A and C are in OFF. Two sets of cables are included.	IZM61...W	**IZM61C-MIL31C-W** CAM-51237
	IZM65,67...W	**IZM6C-MIL31C-W** CAM-51109
Type 32, for 3 circuit breakers: Two normal power supplies (A, C) and a bus coupling circuit breaker (B). Any one or two circuit breakers can be closed at the same time. Three sets of cables are included.	IZM61...W	**IZM61C-MIL32C-W** CAM-51238
	IZM65,67...W	**IZM6C-MIL32C-W** CAM-51110

2-line interlocking logic

A	B
0	0
1	0
0	1

Type 31 interlocking logic

A	B	C
0	0	0
1	0	0
1	0	1
0	0	1
0	1	0

Type 32 interlocking logic

A	B	C
0	0	0
1	0	0
0	1	0
0	0	1
1	1	0
0	1	1
1	0	1

Mechanical Interlock

The mechanical interlock of the main device allows the interlocking among Frame 61, 65 and 67 of same or different sizes.
One part number corresponds to one circuit breaker mechanical interlock.
Cannot be assembled with external auxiliary contacts at the same time.

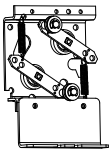

2-line interlocking system requires 2 mounting kits and 1 set of cables.
Type 31 interlocking system requires 3 mounting kits and 2 set of cables.
Type 32 interlocking system requires 3 mounting kits and 3 set of cables

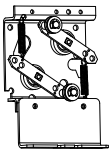

2-line interlocking system requires 2 mounting kits and 1 set of cables.
Type 31 interlocking system requires 3 mounting kits and 2 set of cables.
Type 32 interlocking system requires 3 mounting kits and 3 set of cables.

	For use with	**Part No.** Article No.
Mechanical interlock, fixed mounting		
Interlocking for 2 circuit breakers: A normal power supply (A) and an emergency power supply (B).	IZM61...F	**IZM61C-MIL2C-F-2** CAM-51239
	IZM65,67...F	**IZM6C-MIL2C-F-2** CAM-51111
Type 31, for 3 circuit breakers: Two normal power supplies (A, C) and an emergency power supply (B). When B in OFF, A and C can be switched on. B can be switched on only when A and C are in OFF.	IZM61...F	**IZM61C-MIL31C-F-2** CAM-51240
	IZM65,67...F	**IZM6C-MIL31C-F-2** CAM-51112
Type 32, for 3 circuit breakers: Two normal power supplies (A, C) and a bus coupling circuit breaker (B). Any one or two circuit breakers can be closed at the same time.	IZM61...F	**IZM61C-MIL32C-F-2** CAM-51241
	IZM65,67...F	**IZM6C-MIL32C-F-2** CAM-51113
Mechanical interlock, withdrawable mounting		
Interlocking for 2 circuit breakers: A normal power supply (A) and an emergency power supply (B).	IZM61...W	**IZM61C-MIL2C-W-2** CAM-51242
	IZM65,67...W	**IZM6C-MIL2C-W-2** CAM-51114
Type 31, for 3 circuit breakers: Two normal power supplies (A, C) and an emergency power supply (B). When B in OFF, A and C can be switched on. B can be switched on only when A and C are in OFF.	IZM61...W	**IZM61C-MIL31C-W-2** CAM-51243
	IZM65,67...W	**IZM6C-MIL31C-W-2** CAM-51115
Type 32, for 3 circuit breakers: Two normal power supplies (A, C) and a bus coupling circuit breaker (B). Any one or two circuit breakers can be closed at the same time.	IZM61...W	**IZM61C-MIL32C-W-2** CAM-51244
	IZM65,67...W	**IZM6C-MIL32C-W-2** CAM-51116
Mechanical interlock cables Cable length is subject to mechanical interlock type. A set of cables usually include 2 cables.		
Length 2000mm	IZM61,65,67...F IZM61,65,67...W	**IZM6C-MIL-CAB2000** CAM-51117
Length 3000mm	IZM61,65,67...F IZM61,65,67...W	**IZM6C-MIL-CAB3000** CAM-51118

2-line interlocking logic

A	B
0	0
1	0
0	1

Type 31 interlocking logic

A	B	C
0	0	0
1	0	0
1	0	1
0	0	1
0	1	0

Type 32 interlocking logic

A	B	C
0	0	0
1	0	0
0	1	0
0	0	1
1	1	0
0	1	1
1	0	1

Interphase Partition

The interphase partition is mounted vertically between the wiring boards in the fixed section of the withdrawable circuit breaker, to increase the insulation strength of the busbar connection and prevent the arc from spreading to the inside of the circuit breaker.

	For use with	**Part No.** Article No.
Withdrawable type		
Interphase partition - 3-pole	IZM61	**IZM61C-IB-3** [1)] CAM-51245
Interphase partition - 4-pole	IZM61	**IZM61C-IB-4** [1)] CAM-51246
Interphase partition - 3-pole	IZM65/67	**IZM6C-IB-3-W** CAM-51119
Interphase partition - 4-pole	IZM65/67	**IZM6C-IB-4-W** CAM-51120
Interphase partition - 3-pole	IZM65/67	**IZM6C-IB-3-F** CAM-51121
Interphase partition - 4-pole	IZM65/67	**IZM6C-IB-4-F** CAM-51122

Notes: [1)] Can also be used for fixed circuit breakers.

Lever-In/Lever-Out Handle

	For use with	**Part No.** Article No.
–	IZM61	**IZM61C-LT** CAM-51251
–	IZM65/67	**IZM6C-LT** CAM-51126

Door Escutcheon

The door escutcheon is mounted on the door and features a protection level up to IP40. The circuit breaker offers an IP20 protection level when mounted separately. Corresponding door escutcheon is available for both fixed and withdrawable circuit breakers.

	For use with	**Part No.** Article No.
Door escutcheon for withdrawable circuit breaker	IZM61	**IZM61C-DEG-W** CAM-51249
Door escutcheon for withdrawable circuit breaker	IZM65/67	**IZM6C-DEG-W** CAM-51123
Door escutcheon for fixed circuit breaker	IZM61	**IZM61C-DEG-F** CAM-51250
Door escutcheon for fixed circuit breaker	IZM65/67	**IZM6C-DEG-F** CAM-51124

Vertical Main Wiring Terminals

Horizontal wiring is configured as standard for vertical main wiring terminals.

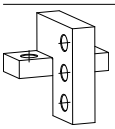

Wiring method	Rated current I_n A	Rated ultimate Switching capacity I_{cu} KA	Poles	For use with	**Part No.** Article No.
Vertical wiring	≤ 2500	≤ 66	3	IZM65	**IZM6C-TV253** CAM-51127
Vertical wiring	≤ 2500	≤ 66	4	IZM65	**IZM6C-TV254** CAM-51128

Power Module

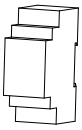

	For use with	Rated control voltage U_s V	**Part No.** Article No.	**Note**
–	IZM61/65/67	85-264VAC,120-370VDC input 24VDC, 1.5A output	**EASY400-POW-CN** 90000019400525	DIN rail mount

External Neutral Current Sensor

A three-pole circuit breaker is used, which requires an external neutral current sensor to be equipped with, for residual current ground protection.

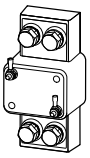

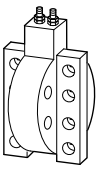

	For use with	**Part No.** Article No.	**Note**
External mounting Residual current ground protection	IZM61	**IZM61C-CT** CAM-51213	–
External mounting Residual current ground protection	IZM65/67	**IZM6C-CT** CAM-51083	–

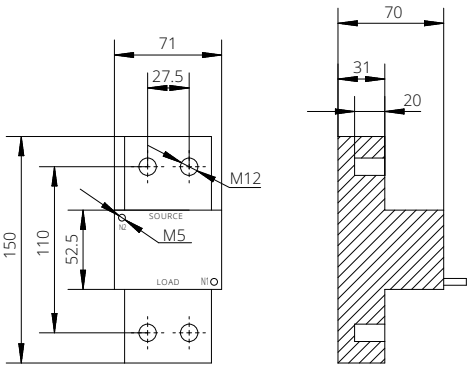

IZM61C-CT dimensions

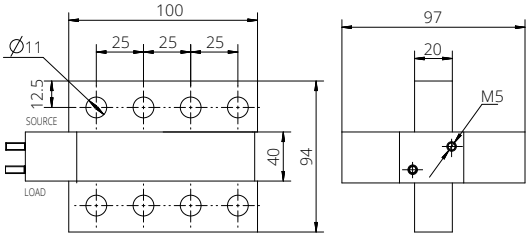

IZM6C-CT dimensions

PT10 - Long Delay Protection with I²t Curves and Short Delay Protection with Flat Curves

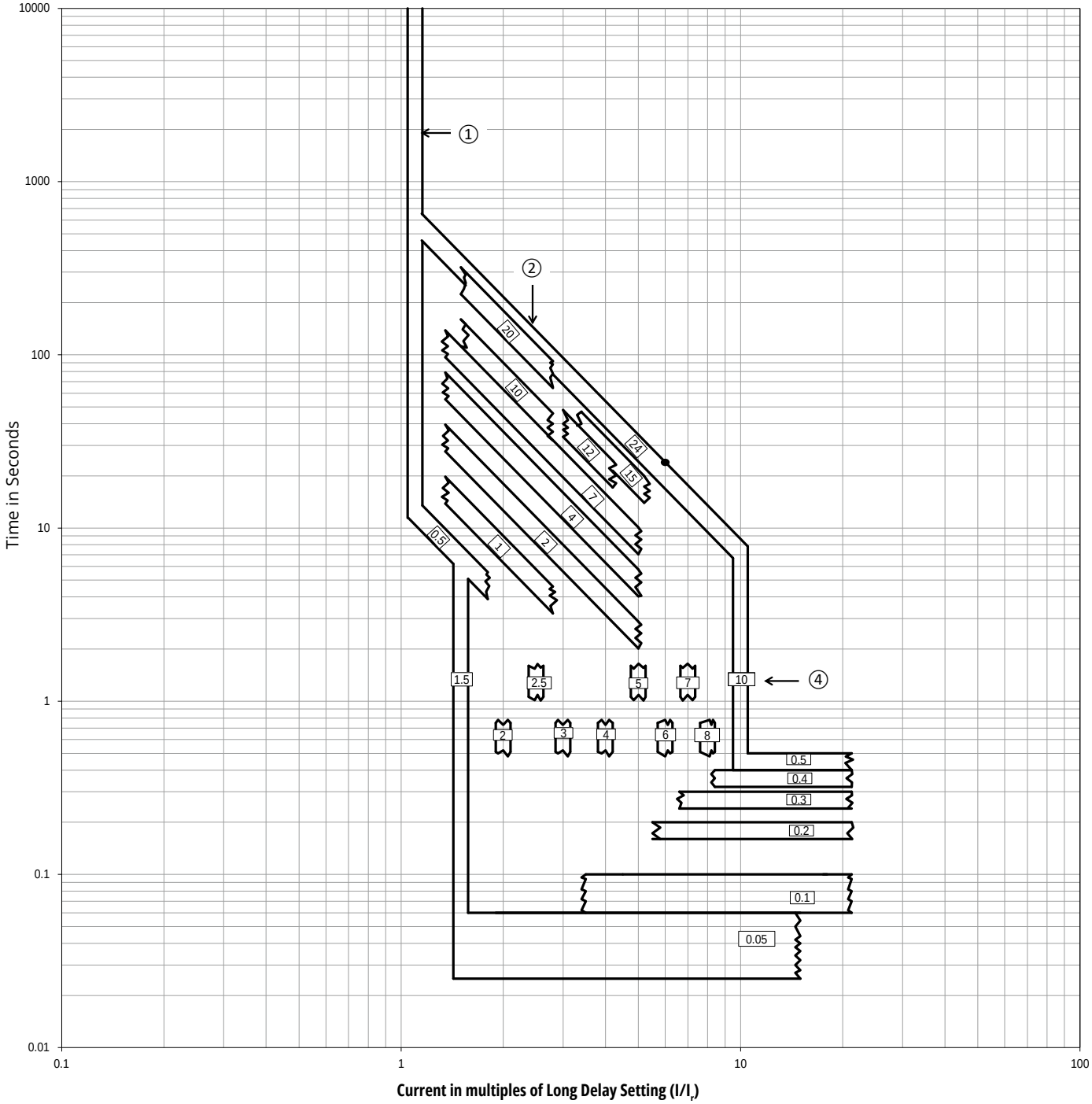

Notes:

1. Long delay I²T slopes flattens out after 6x of I_r.
2. If Thermal Memory is enabled for long delay, trip times may be shorter than indicated in this curve.
3. Curves apply from -20°C to +50°C ambient. Temperature above 85°C will cause over temperature trip.
4. This curve is for 50hz or 60Hz applications.
5. These curves are comprehensive for series IZM61/65/67 circuit breakers, including all frame sizes, ratings and constructions.
6. The total clearance times shown include the response time for trip unit, the breaker opening time and the interruption of the current.

PT10 - Long Delay Protection with I²t Curves and Short Delay Protection with I²t Curves

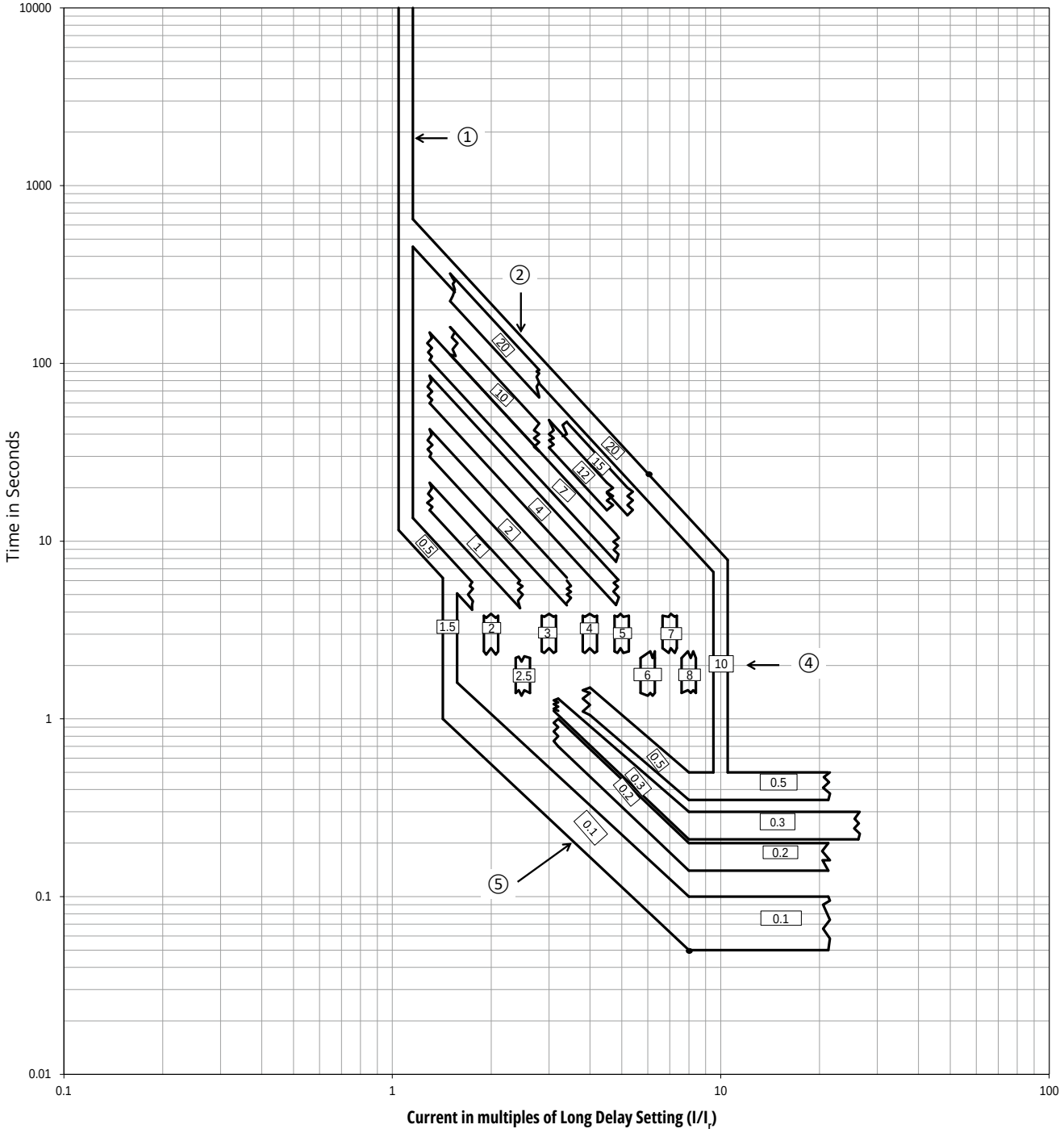

Notes:

1. Short delay pickup setting is 1.5x to 10x of I_r.
2. Long delay time = 0.5s to 24s, with +0/-30% accuracy.
3. Short delay slope is I^2t.
4. I^2t slopes intersect at 8x of I_r for top of band with FLAT time. The lower band flat response time value projected to I^2T line will determine the shape of the curve.
5. If Thermal Memory is enabled for long delay, trip times may be shorter than indicated in this curve.
6. Curves apply from -20°C to +50°C ambient. Temperature above 85°C will cause over temperature trip.
7. This curve is for 50hz or 60Hz applications.
8. These curves are comprehensive for series IZM61/65/67 circuit breakers, including all frame sizes, ratings and constructions.
9. The total clearance times shown include the response time for trip unit, the breaker opening time and the interruption of the current.

PT10 – Ground Protection with Flat Curves

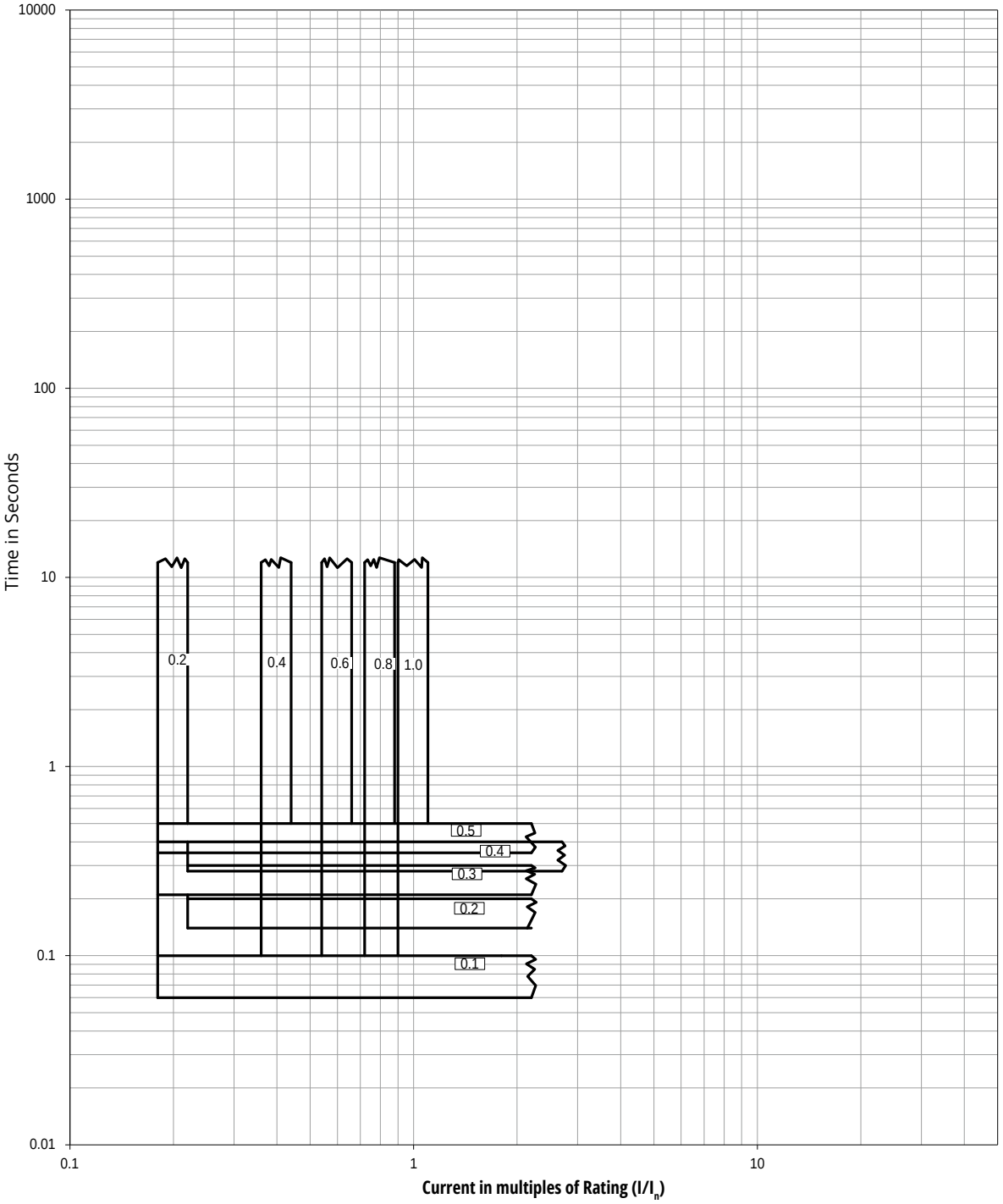

Notes:

1. Ground pickup setting is 0.2 to 1 of I_n setting.
2. Ground Flat time setting is 0.1s to 0.5s.
3. Ground pickup setting is multiples of the Current Rating I_n.
4. The end of the curve is determined by the interrupting rating of the circuit breaker.
5. Curves apply from -20°C to +50°C ambient. Over-temperature tripping will be caused when the temperature exceeds 85°C.
6. This curve is for 50hz or 60Hz applications.
7. These curves are comprehensive for series IZM61/65/67 circuit breakers, including all frame sizes, ratings and constructions.
8. The total clearance times shown include the response time for trip unit, the breaker opening time and the interruption of the current.

PT10 – Ground Protection with I²T Curves

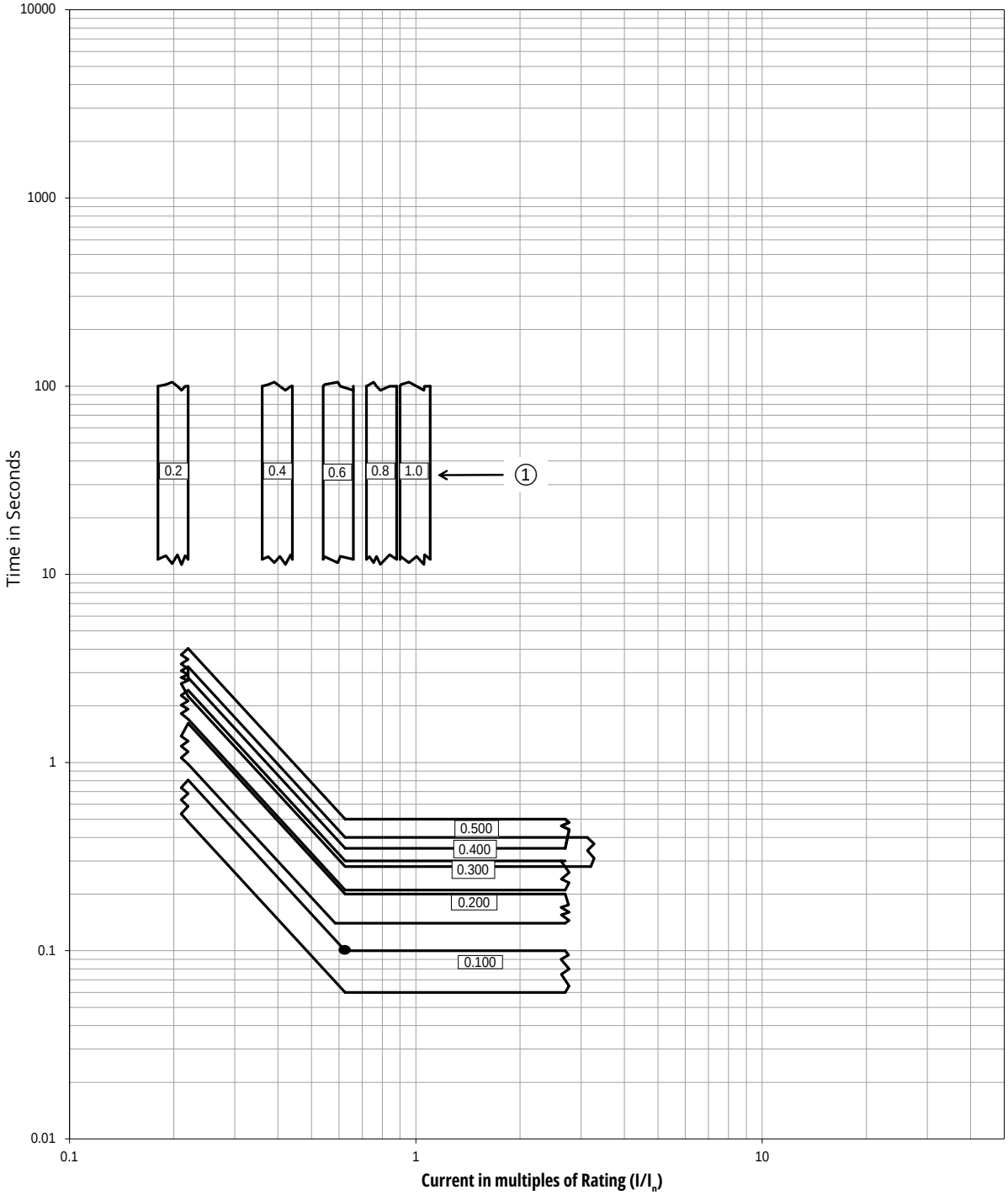

Notes:

1. Ground pickup setting is 0.2 to 1.0 of I_n.
2. Break points at 0.625 x I_n to flat.
3. Ground I^2T time is 0.1s to 0.5s.
4. Ground pickup setting is multiples of the Current Rating I_n.
5. The end of the curve is determined by the interrupting rating of the circuit breaker.
6. Curves apply from -20°C to +50°C ambient. Over-temperature tripping will be caused when the temperature exceeds 85°C.
7. This curve is for 50hz or 60Hz applications.
8. These curves are comprehensive for series IZM61/65/67 circuit breakers, including all frame sizes, ratings and constructions.
9. The total clearance times shown include the response time for trip unit, the breaker opening time and the interruption of the current.

PT10 - Instantaneous Protection Curves

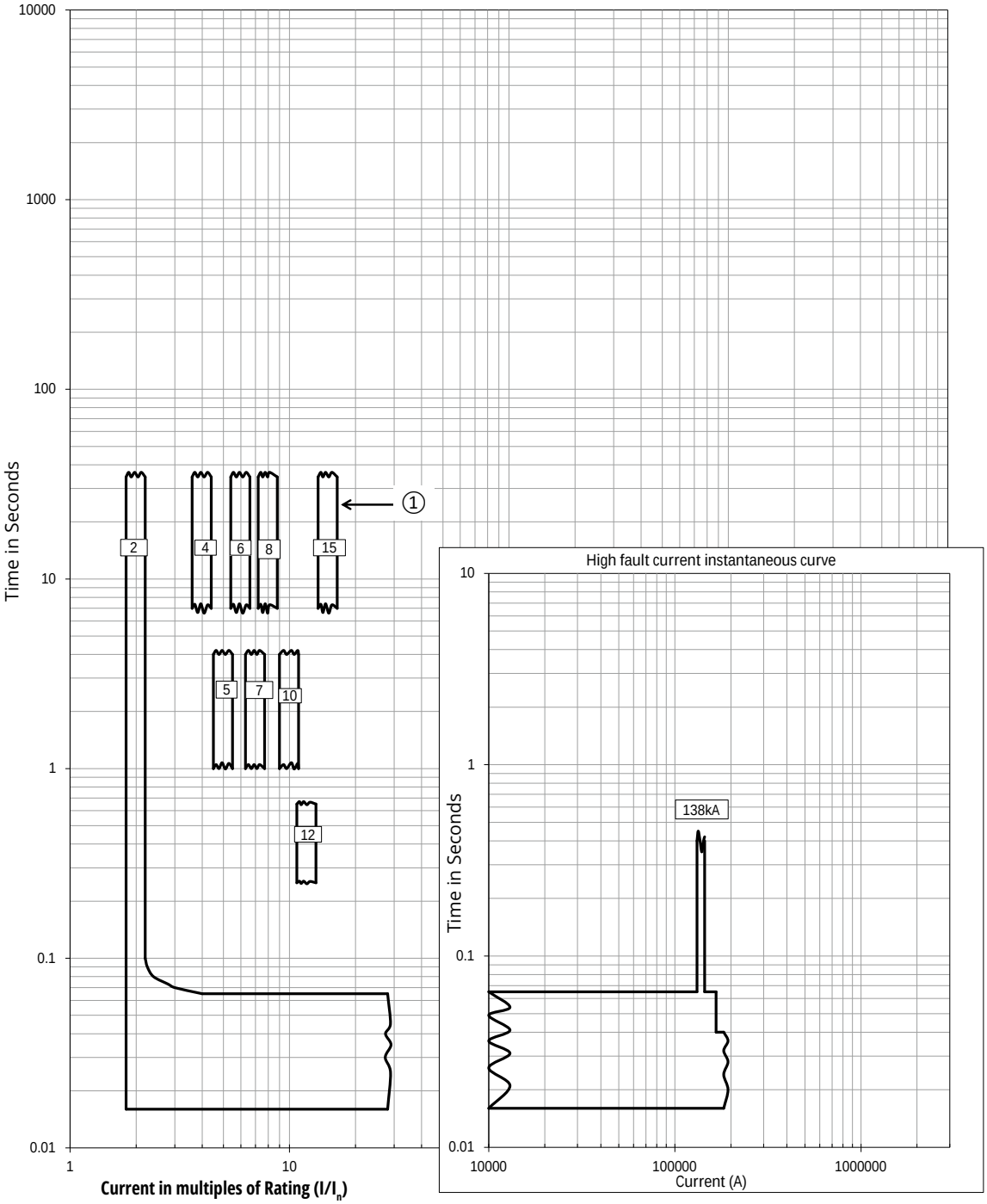

Notes:

1. Instantaneous protection can be disabled via rotary switch.
2. Instantaneous pickup setting is multiples of the Current Rating I_n.
3. The end of the curve is determined by the interrupting rating of the circuit breaker.
4. Curves apply from -20°C to +50°C ambient. Over-temperature tripping will be caused when the temperature exceeds 85°C.
5. This curve is for 50hz or 60Hz applications.
6. These curves are comprehensive for series IZM61/65/67 circuit breakers, including all frame sizes, ratings and constructions.
   The total clearance times shown include the response time for trip unit, the breaker opening time and the interruption of the current.
7. Fixed High Instantaneous protection provided in IZM61 circuit breakers is set to pick up at 138kA.
8. This protection is functional even when the Instantaneous is set to the OFF position.
9. The PT unit will light the Instantaneous LED for a High Instantaneous protection action.
10. The total Instantaneous clearing times shown are conservative and consider the maximum response times of the trip unit, the circuit breaker opening, and the interruption of the current under factors that contribute to worst case conditions, like: maximum rated current, single-phase interruption, and minimum power factor. Faster clearing times are possible depending on the specific system conditions and settings.

PT20/25 – Long Delay Protection with I^2t Curves and Short Delay Protection with Flat Curves

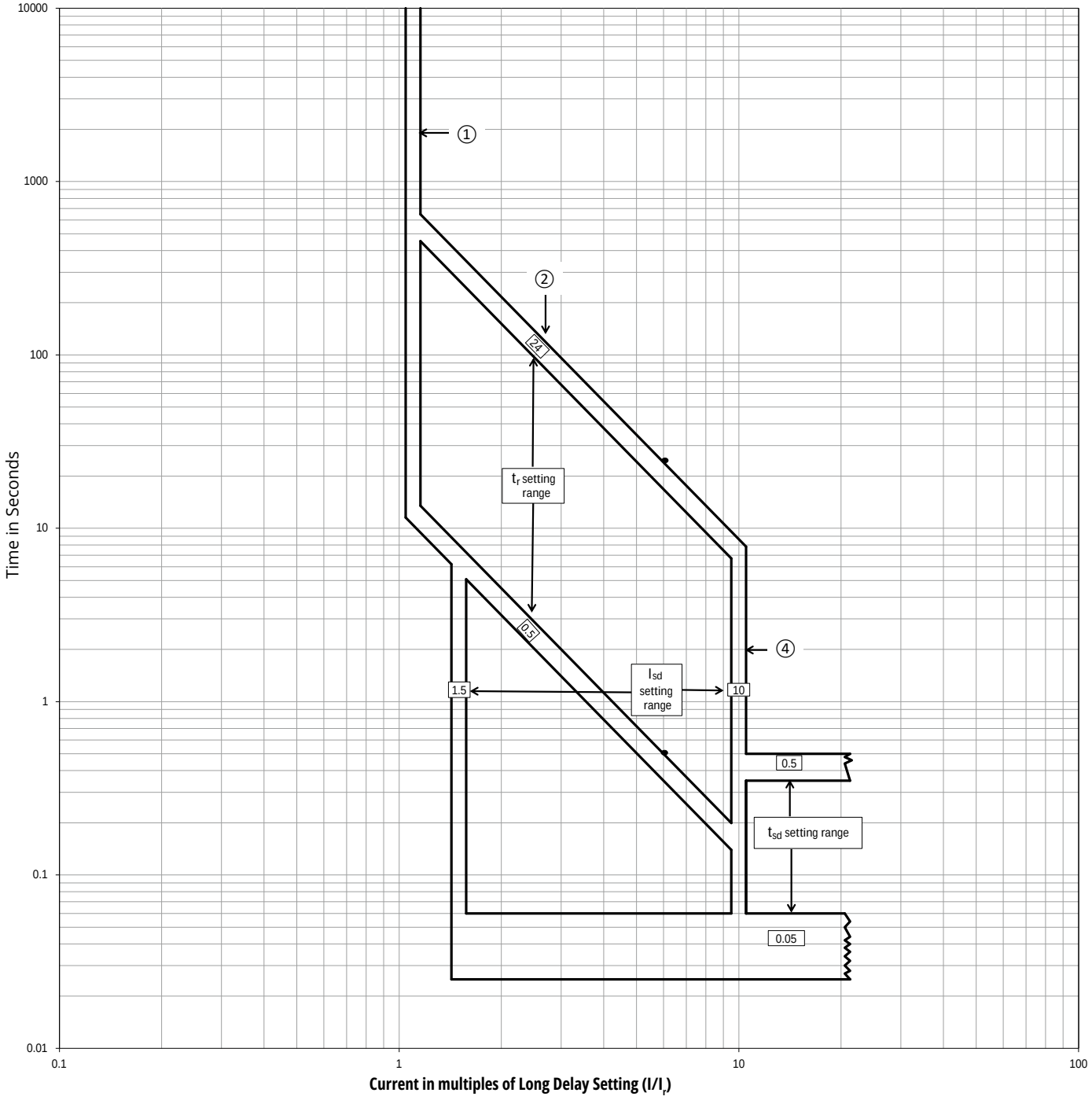

Notes:

1. Short Delay I^2t slopes flattens out after 6x of I_r.
2. If Thermal Memory is enabled for long delay, trip times may be shorter than indicated in this curve.
3. Curves apply from -20°C to +50°C ambient. Over-temperature tripping will be caused when the temperature exceeds 85°C.
4. This curve is for 50hz or 60Hz applications.
5. These curves are comprehensive for series IZM61/65/67 circuit breakers, including all frame sizes, ratings and constructions.
6. The total clearance times shown include the response time for trip unit, the breaker opening time and the interruption of the current.

PT20/25 - Long Delay Protection with I²t Curves and Short Delay Protection with I²T CurvesI²t

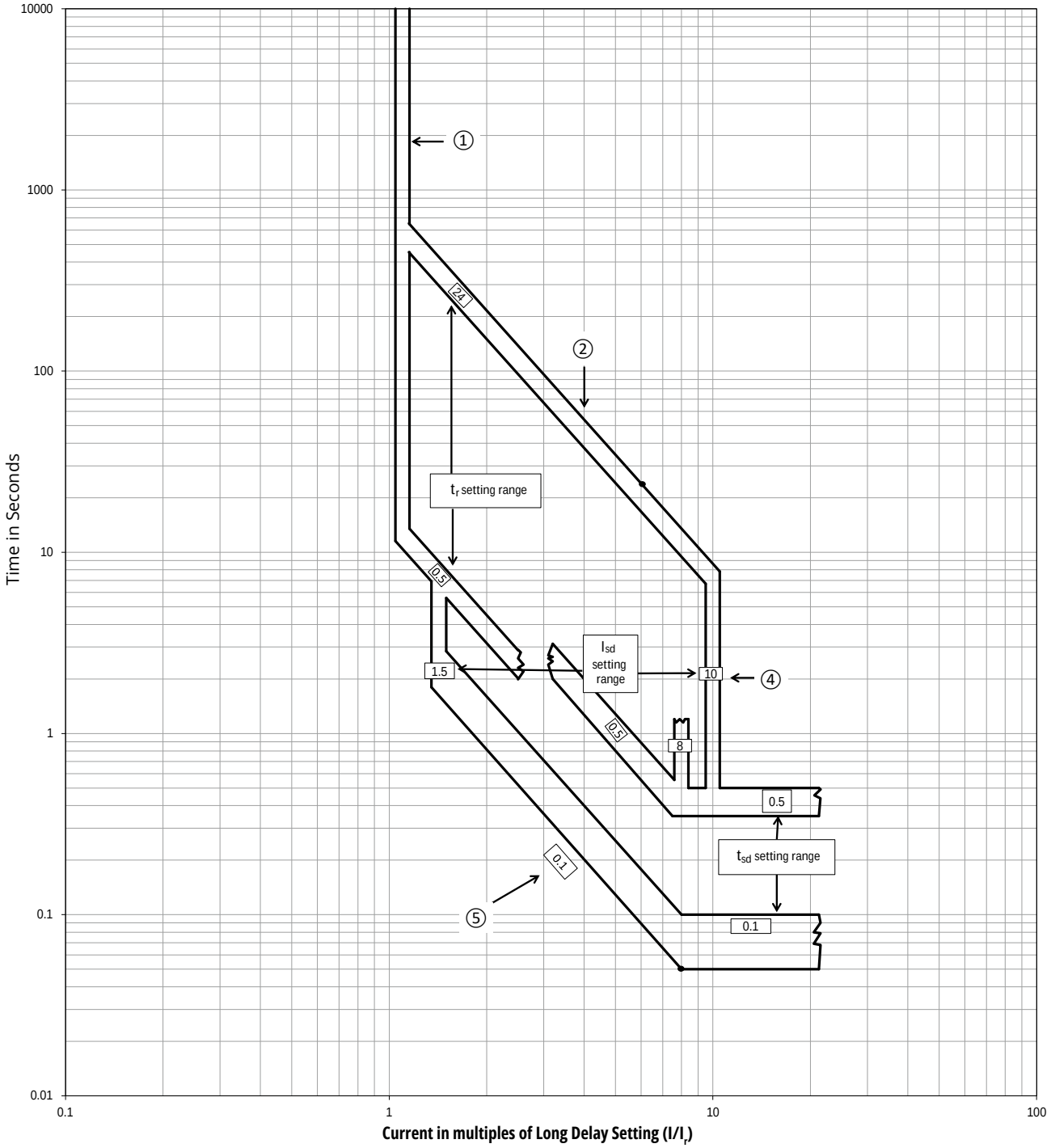

Notes:

1. Short Delay pickup setting is 1.5x to 10x of I_r.
2. Long Delay time setting is 0.5s to 24s, with +0/-30% accuracy.
3. Short delay slope is I^2t.
4. I^2t slopes intersect at 8x of I_r for top of band with FLAT time. The lower band flat response time value projected to I^2T line will determine the shape of the curve.
5. If Thermal Memory is enabled for long delay, trip times may be shorter than indicated in this curve.
6. Curves apply from -20°C to +50°C ambient. Over-temperature tripping will be caused when the temperature exceeds 85°C.
7. This curve is for 50hz or 60Hz applications.
8. These curves are comprehensive for series IZM61/65/67 circuit breakers, including all frame sizes, ratings and constructions.
9. The total clearance times shown include the response time for trip unit, the breaker opening time and the interruption of the current.

PT20/25 - Long Delay Protection with I^4t Curves and Short Delay Protection with Flat Curves

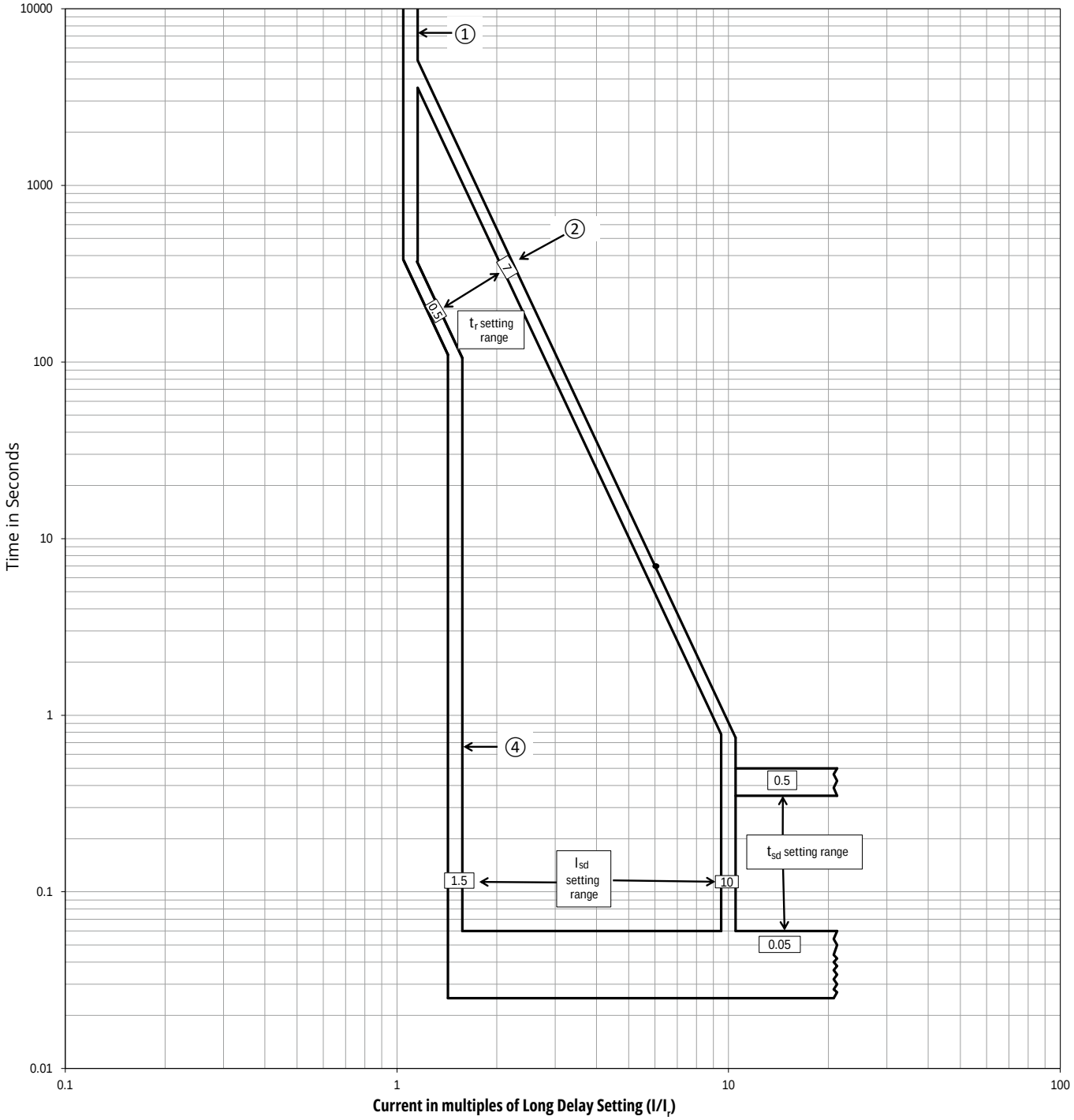

Notes:

1. Short delay pickup setting is 1.5x to 10x of I_r.
2. Long delay time setting is 0.5s to 24s, with +0/-30% accuracy.
3. If Thermal Memory is enabled for long delay, trip times may be shorter than indicated in this curve.
4. Curves apply from -20°C to +50°C ambient. Over-temperature tripping will be caused when the temperature exceeds 85°C.
5. This curve is for 50hz or 60Hz applications.
6. These curves are comprehensive for series IZM61/65/67 circuit breakers, including all frame sizes, ratings and constructions.
7. The total clearance times shown include the response time for trip unit, the breaker opening time and the interruption of the current.

PT20/25 - Long Delay Protection with I^1t Curves and Short Delay Protection with Flat Curves

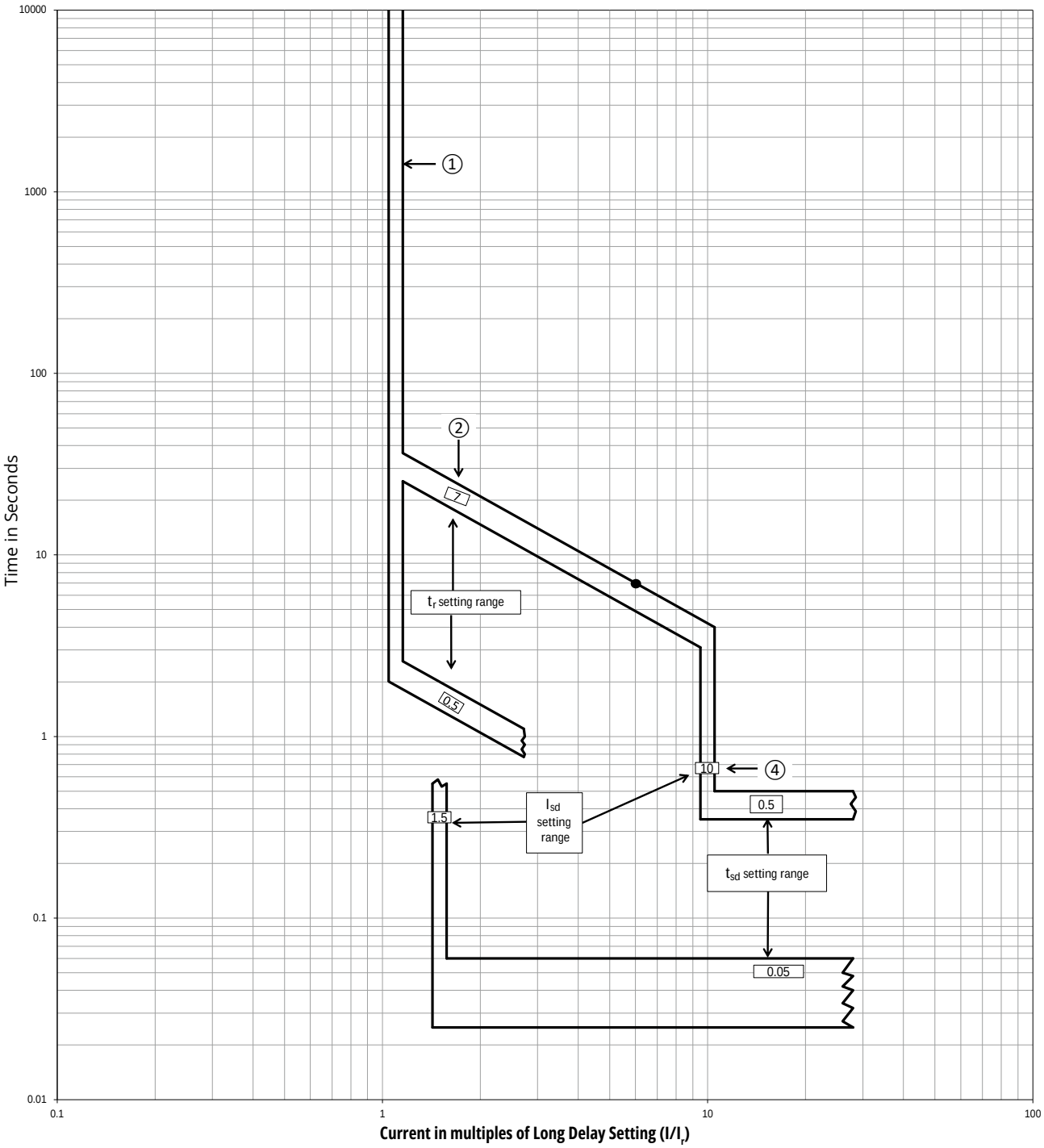

Notes:

1. Short delay pickup setting is 1.5x to 10x of I_r.
2. Long delay time setting is 0.5s to 24s, with +0/-30% accuracy.
3. If Thermal Memory is enabled for long delay, trip times may be shorter than indicated in this curve.
4. Curves apply from -20°C to +50°C ambient. Over-temperature tripping will be caused when the temperature exceeds 85°C.
5. This curve is for 50hz or 60Hz applications.
6. These curves are comprehensive for series IZM61/65/67 circuit breakers, including all frame sizes, ratings and constructions.
7. The total clearance times shown include the response time for trip unit, the breaker opening time and the interruption of the current.

PT25 - Long Delay Protection with $I^{0.5}t$ Curves and Short Delay Protection with Flat Curves

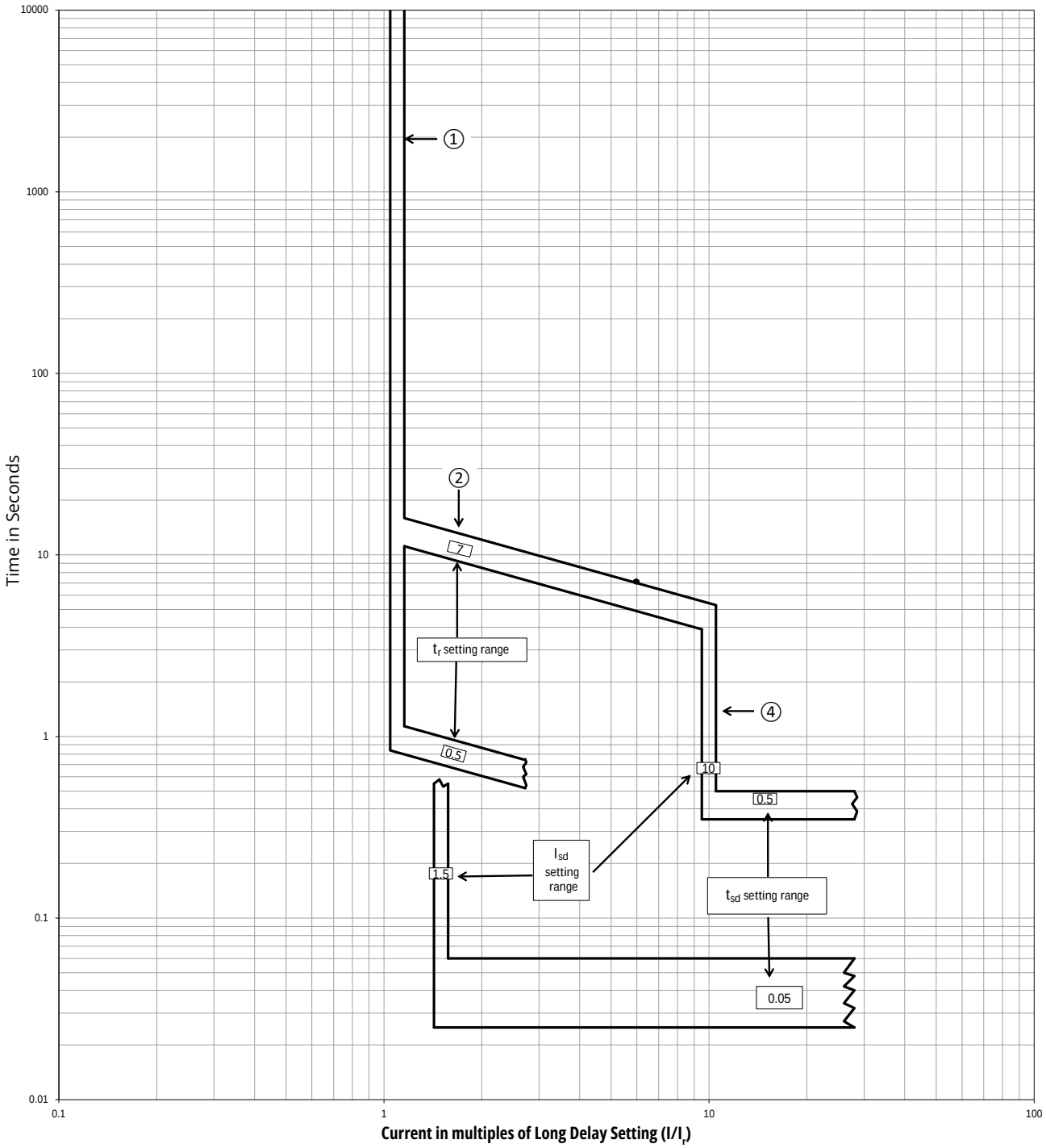

Notes:

1. Short delay pickup setting is 1.5x to 10x of I_r.
2. Long delay time setting is 0.5s to 24s, with +0/-30% accuracy.
3. If Thermal Memory is enabled for long delay, trip times may be shorter than indicated in this curve.
4. Curves apply from -20°C to +50°C ambient. Over-temperature tripping will be caused when the temperature exceeds 85°C.
5. This curve is for 50hz or 60Hz applications.
6. These curves are comprehensive for series IZM61/65/67 circuit breakers, including all frame sizes, ratings and constructions.
7. The total clearance times shown include the response time for trip unit, the breaker opening time and the interruption of the current.

PT20/25 – Ground Protection with Flat Curves

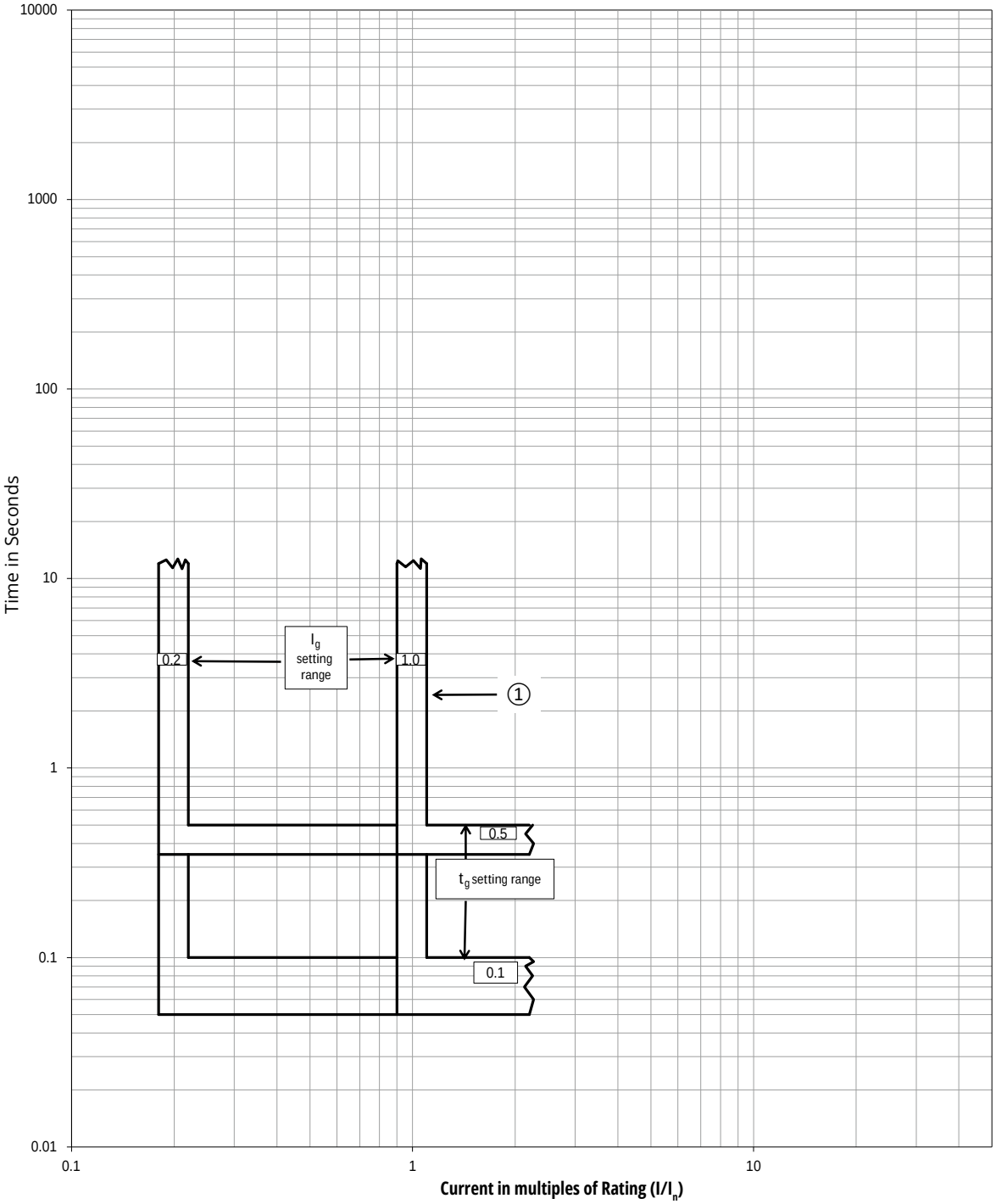

Notes:

1. Ground pickup setting is 0.2 to 1.0 of I_n.
2. Ground flat time setting is 0.1s to 0.5s.
3. Ground pickup setting is multiples of the Current Rating I_n.
4. The end of the curve is determined by the interrupting rating of the circuit breaker.
5. Curves apply from -20°C to +50°C ambient. Over-temperature tripping will be caused when the temperature exceeds 85°C.
6. This curve is for 50hz or 60Hz applications.
7. These curves are comprehensive for series IZM61/65/67 circuit breakers, including all frame sizes, ratings and constructions.
8. The total clearance times shown include the response time for trip unit, the breaker opening time and the interruption of the current.

PT20/25 – Ground Protection with I^2T Curves

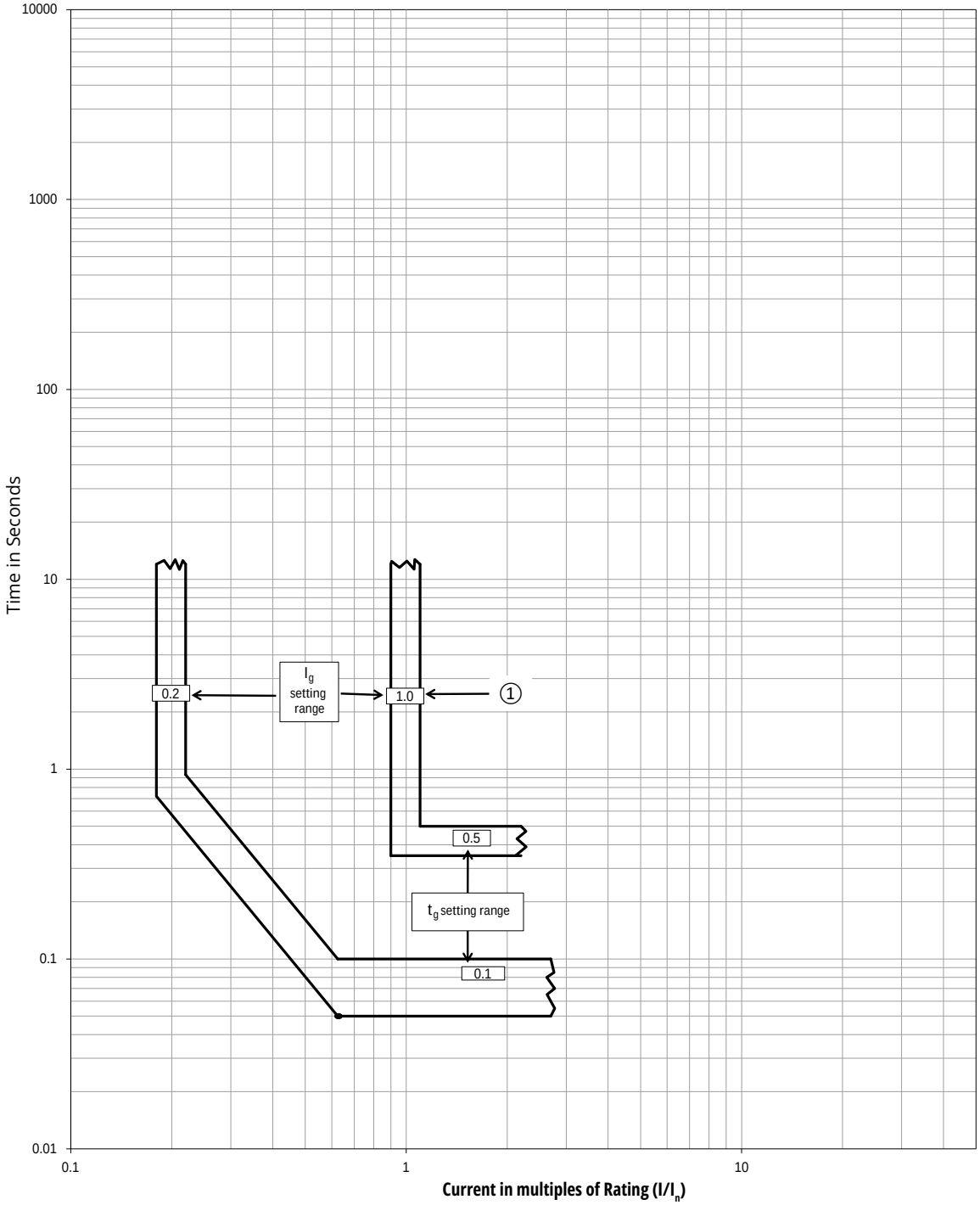

Notes:

1. Ground pickup setting is 0.2 to 1.0 of I_n.
2. Break points at 0.625 x I_n to flat.
3. Ground I^2T time setting is 0.1s to 0.5s.
4. Ground pickup setting is multiples of the Current Rating I_n.
5. The end of the curve is determined by the interrupting rating of the circuit breaker.
6. Curves apply from -20°C to +50°C ambient. Over-temperature tripping will be caused when the temperature exceeds 85°C.
7. This curve is for 50hz or 60Hz applications.
8. These curves are comprehensive for series IZM61/65/67 circuit breakers, including all frame sizes, ratings and constructions.
9. The total clearance times shown include the response time for trip unit, the breaker opening time and the interruption of the current.

PT 20/25 – Instantaneous Protection Curves

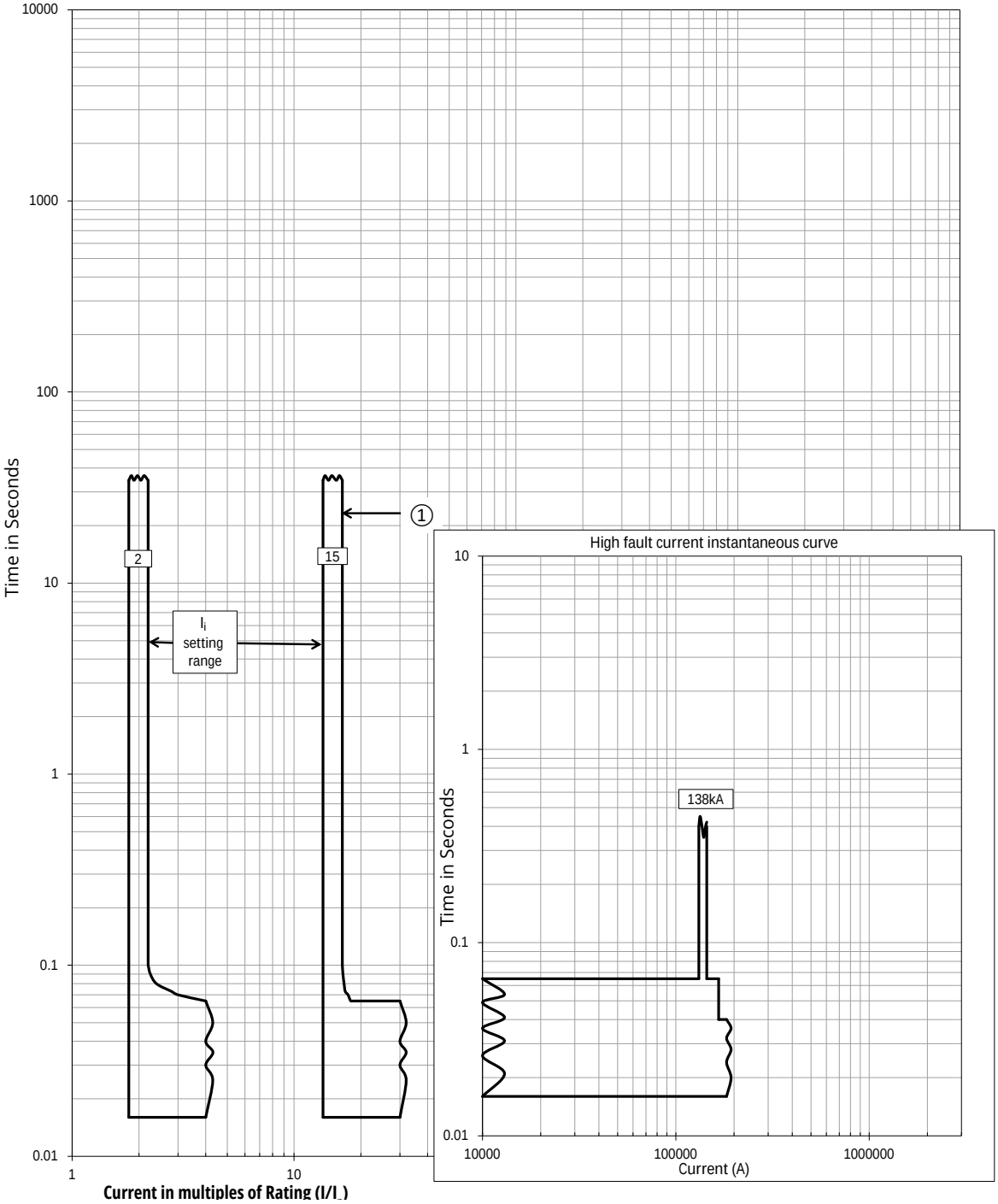

Notes:

1. Instantaneous protection can be disabled via rotary switch.
2. Instantaneous pickup setting is multiples of the Current Rating I_n.
3. The end of the curve is determined by the interrupting rating of the circuit breaker.
4. Curves apply from -20°C to +50°C ambient. Over-temperature tripping will be caused when the temperature exceeds 85°C.
5. This curve is for 50hz or 60Hz applications.
6. These curves are comprehensive for series IZM61/65/67 circuit breakers, including all frame sizes, ratings and constructions.
   The total clearance times shown include the response time for trip unit, the breaker opening time and the interruption of the current.
7. Fixed High Instantaneous protection provided in IZM61 circuit breakers is set to pick up at 138kA.
8. This protection is functional even when the Instantaneous is set to the OFF position.
9. The PT unit will light the Instantaneous LED for a High Instantaneous protection action.
10. The total Instantaneous clearing times shown are conservative and consider the maximum response times of the trip unit, the circuit breaker opening, and the interruption of the current under factors that contribute to worst case conditions, like: maximum rated voltages, single phase interruption, and minimum power factor. Faster clearing times are possible depending on the specific systems and settings.

Power Loss (with Ambient Temperature at +40°C)

Power loss is the total power consumption measured when the frame rating current I_n passes through the circuit breaker.

	Power loss (W)	
Model	**Fixed type**	**Withdrawable type**
IZM61 1600A frame	123.5	331.5
IZM65 2500A frame	356.8	823.4
IZM67 4000A frame	486.7	856.8

Temperature Derating

When the working ambient temperature is higher than +40°C, the continuous current carrying capacity can be corrected with reference to the following table:

Model	Rated current (A)	+40°C	+45°C	+50°C	+55°C	+60°C	+65°C	+70°C
IZM61 1600A frame	400-1250	1	1	1	1	1	1	1
	1600	1	1	1	0.95	0.93	0.87	0.8
IZM65 2500A frame	400-2000	1	1	1	1	1	1	1
	2500	1	1	1	1	0.99	0.94	0.88
IZM67 4000A frame	2000-2500	1	1	1	1	1	1	1
	3200	1	1	1	0.95	0.92	0.89	0.85
	4000	1	0.95	0.92	0.89	0.85	0.82	0.8

When the circuit breaker is installed at higher altitudes than 2000m, its electrical performance can be corrected with reference to the following table:

Altitude (m)		2000	3000	4000	4500	5000
Power frequency voltage withstand (V)		5000	4500	3500	3000	2900
Operational voltage		440/690	440/690	440/690	440/690	440/690
Short-circuit breaking capacity correction factor		1	0.83	0.71	0.66	0.63
Operating current correction factor	IZM61 1600A frame	1	0.98	0.93	0.9	0.87
	IZM65 2500A frame	1	1	1	1	0.97
	IZM67 4000A frame	1	0.93	0.88	0.85	0.82

Notes: The operating current derating correction factor is only for the maximum current in the frame.

Recommended Copper Bar Specifications

		Recommended Copper Bar Specifications		
		Number		
Rated current (frame level) I_{nm} (A)	**Rated current I_n (A)**	**Horizontal outgoing**	**Vertical outgoing**	**Dimensions (mm × mm)**
IZM61 1600A frame	200	2	/	50×5
	400	2	/	50×5
	630	2	/	50×6
	800	2	/	50×10
	1000	2	/	50×10
	1250	3	/	50×8
	1600	3	/	50×10
IZM65 2500A frame	400	2	/	80×5
	630	2	/	80×5
	800	2	/	80×5
	1000	2	/	80×5
	1250	3	/	80×5
	1600	2	/	80×10
	2000	3	/	80×10
	2500	4	/	80×10
IZM67 4000A frame	2000	3	2	100×5
	2500	2	2	100×10
	3200	4	4	100×10
	4000	5	4	100×10

The copper bar specifications used in the table are when the circuit breaker is at the ambient temperature up to 40 °C, installed in an open area, and in accordance with the conventional thermal conditions in GB14048.2.

IZM6 Series Air Circuit Breakers

Power Loss, Derating Factor and Copper Bar Specification

Terminal Numbers are Described as Follows:

1	3	5	6	8	9	11	13	15	16	18	19	21	22	24	26	27	29	31	33	34	36	38	40	42	43	45	46	48	49	51	52	54	55
+24V	ALM1	ALM2	ALM3	ALM4	RELAY1	RELAY3	DI1	DI2	A	GND	Z IN	ZOUT	N1	G1	PE	Ua	Uc	LCB	LCM	UVR1	ST1	SR1	EO1	EO2	NO1	NC1	NO2	NC2	NO3	NC3	NO4	NC4	RR1
GND	ALMC		ALMC		RELAY2	RELAY COM	DI_COM		B		ZCOM		N2	G2		Ub	Un	LCC		UVR2	ST2	SR2	EOC		COM1		COM2		COM3		COM4		RR2
2	4		7		10	12	14		17		20		23	25		28	30	32		35	37	39	41		44		47		50		53		56

1# 2#	24VDC working power supply input
3# 4# 5#	Overcurrent trip switch (OTS) output
6# 7# 8#	Overcurrent trip switch 2 (OTS) output (added function)
9# 10# 11# 12#	Relay DO output (added function)
13# 14# 15#	Programmable DI input (added function)
16# 17# 18#	Communication wiring terminal (added function)
19# 20# 21#	Zone interlocking (added function)
22# 23#	External neutral transformer N1 N2 (added function)
24# 25#	Ground (added function)
26#	PE-phase wiring terminal
27#	Phase A wiring terminal (≤ 690V line voltage) (added function)

28#	Phase B wiring terminal (≤ 690V line voltage) (added function)
29#	Phase C wiring terminal (≤ 690V line voltage) (added function)
30#	Phase N wiring terminal (≤ 690V line voltage) (added function)
31# 32# 33#	LCS wiring terminal (added function)
34# 35#	Under voltage release wiring terminal (added function)
36# 37#	Shunt release wiring terminal
38# 39#	Closing release wiring terminal
40# 41# 42#	Motor operator wiring terminal
43#---54#	Auxiliary contact wiring terminal
55# 56#	Remote reset wiring terminal (added function)

Notes:

1) Position cell switch terminals do not pass through the secondary terminal
2) Buttons and indicator lights are provided by users themselves
3) The secondary wiring of the power module is shown in the diagram – the external power supply is input from U1 (+) and U2 (-), and the two output terminals of the power module are connected separately to corresponding secondary wiring terminals 1# (+) and 2# (-)
4) The circuit diagrams are the ones when the circuit breaker is in the open, released position.
5) This wiring diagram includes all the functions. Optional functions are available only after selected and equipped by users.

IZM61/65/67 Electrical Wiring Diagrams

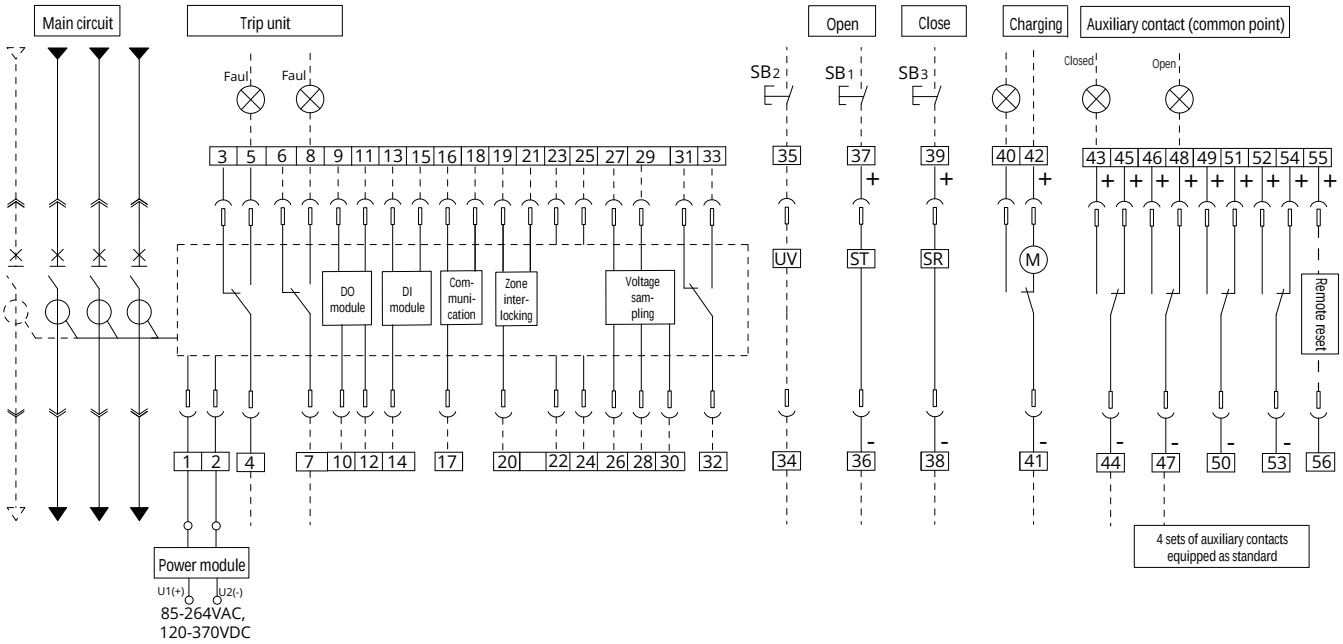

External Auxiliary Contact Terminal Numbers

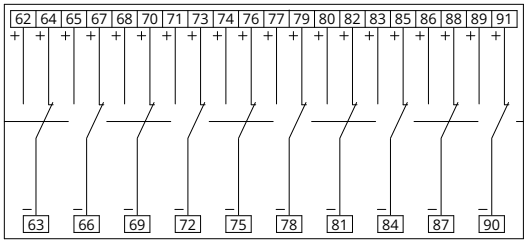

Position Cell Switch Electrical Wiring Diagram

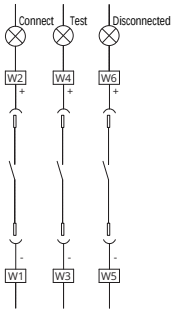

Withdrawable Type (IZM61 200-1600A)

Front view

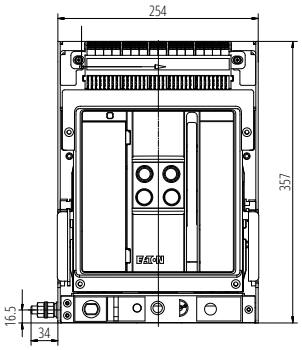

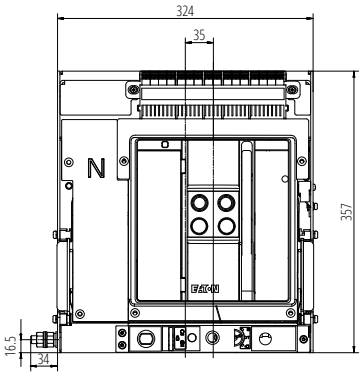

Horizontal wiring

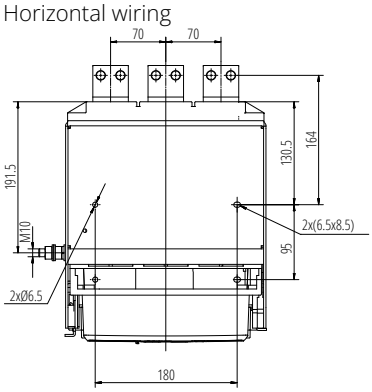

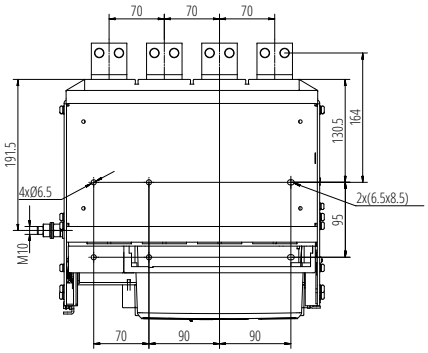

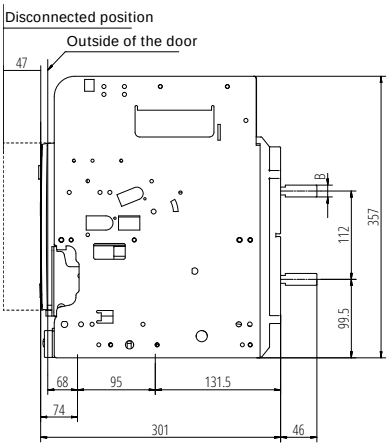

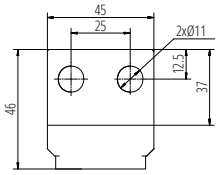

Current	200-1250A	1600A
Dimension B (mm)	10	15

Door escutcheon cutout

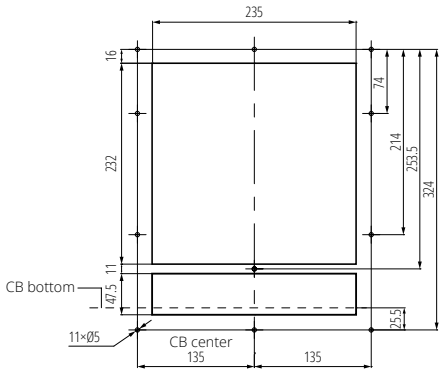

3P

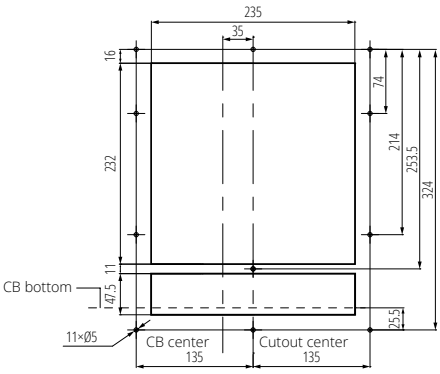

4P

IZM6 Series Air Circuit Breakers

Outline and Mounting Dimensions

Fixed Type (IZM61 200-1600A)

Front view

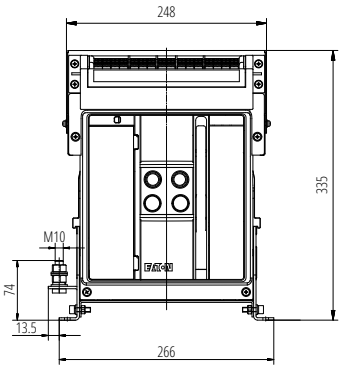

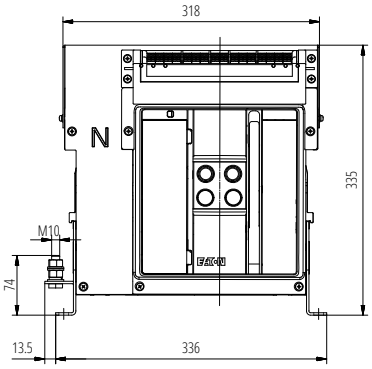

Horizontal wiring

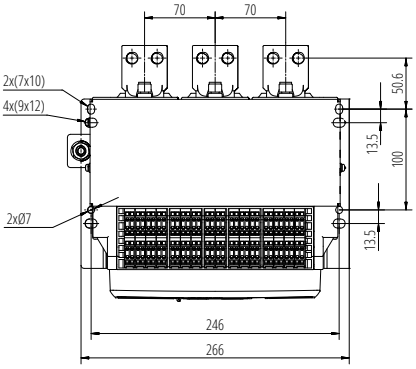

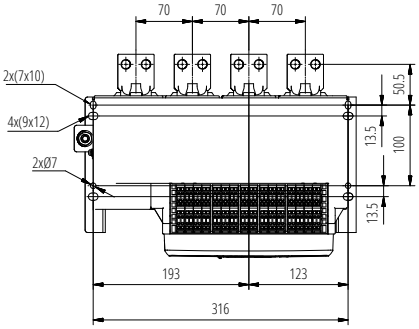

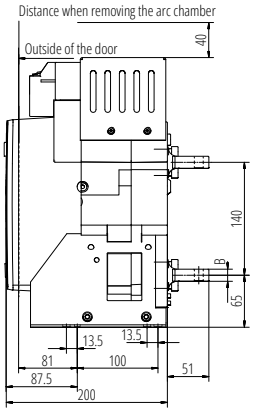

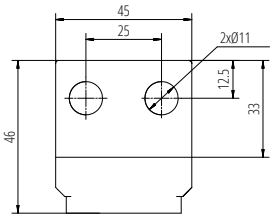

Current	200-1250A	1600A
Dimension B (mm)	10	15

Door escutheon cutout

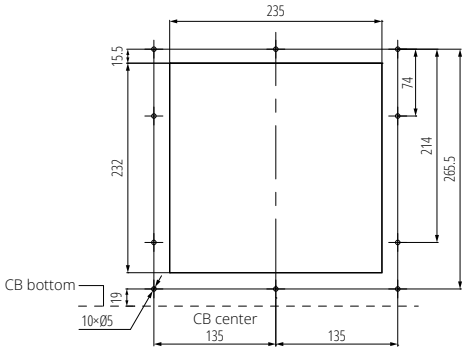

3P

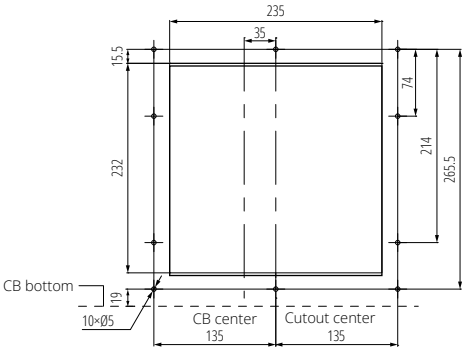

4P

Withdrawable Type (IZM65 400-2500A)

Front view

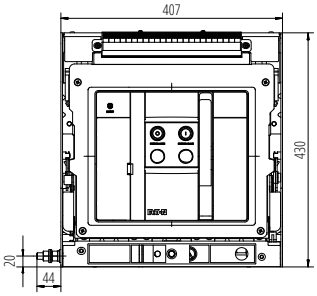

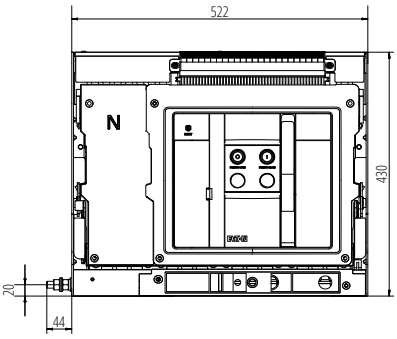

Horizontal wiring

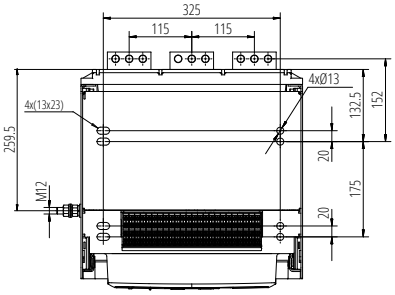

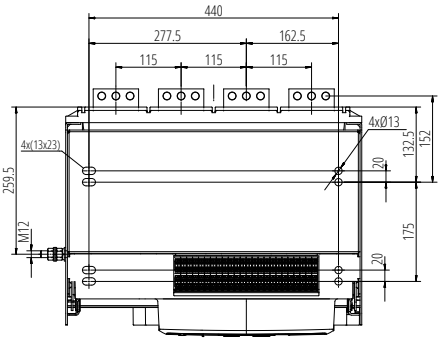

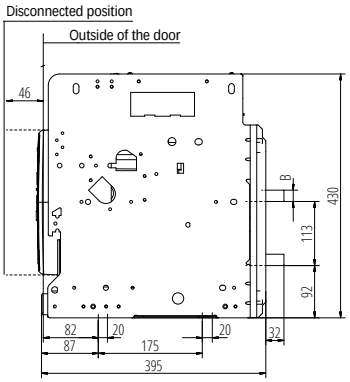

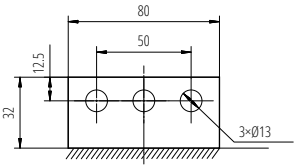

Standard type

Current	400-1600A	2000-2500A
Dimension B (mm)	10	20

Door escutheon cutout

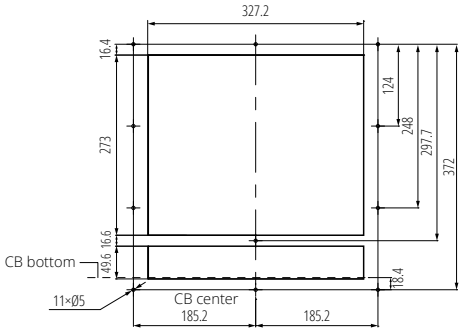

3P

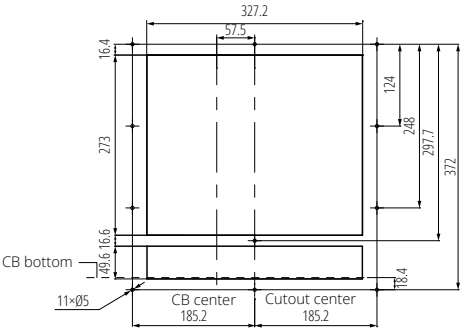

4P

IZM6 Series Air Circuit Breakers

Outline and Mounting Dimensions

Fixed Type (IZM65 400-2500A)

Front view

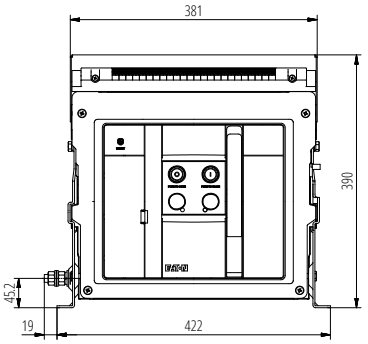

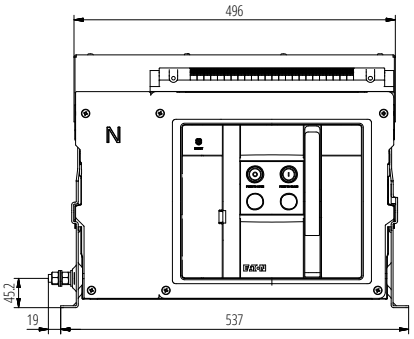

Horizontal wiring

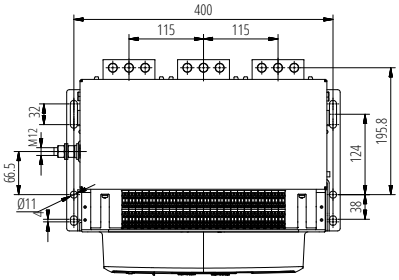

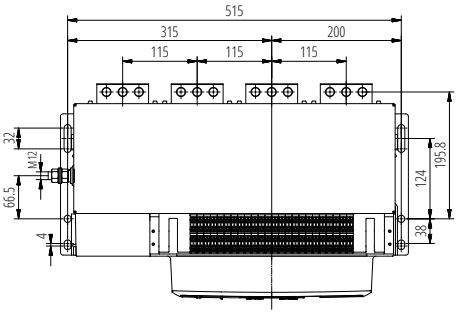

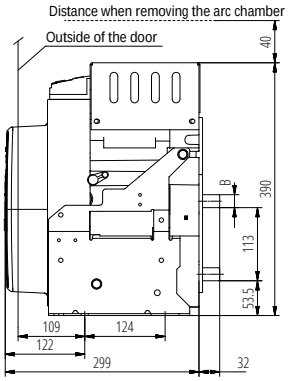

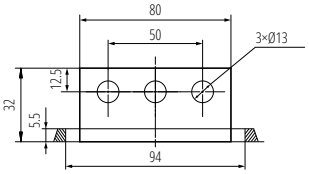

Standard type

Current	400-1600A	2000-2500A
Dimension B (mm)	10	20

Door escutheon cutout

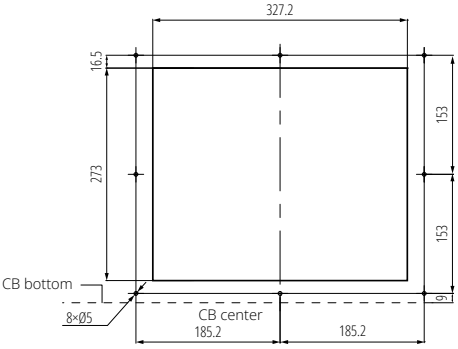

3P

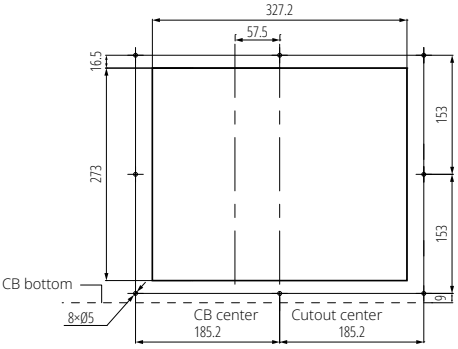

4P

Withdrawable Type (IZM67 2000-3200A)

Front view

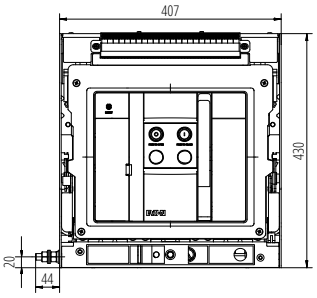

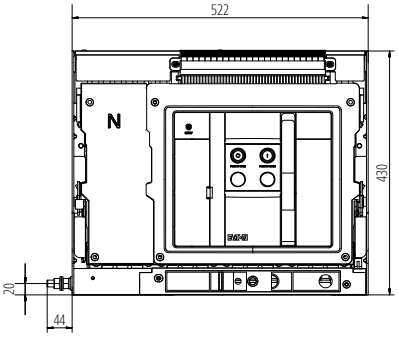

Vertical wiring

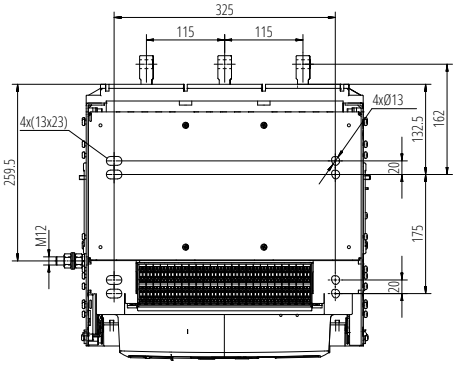

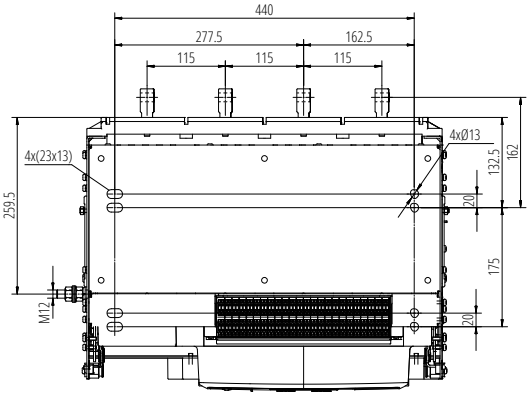

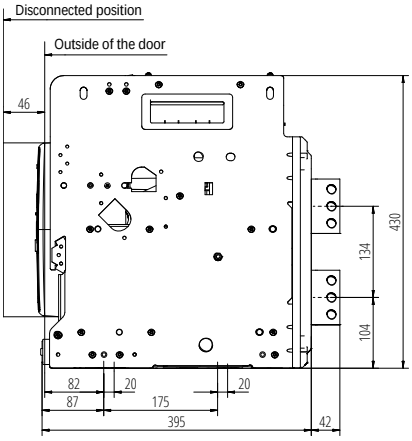

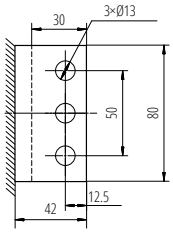

Standard type

Withdrawable Type (IZM67 2000-3200A)

Horizontal wiring

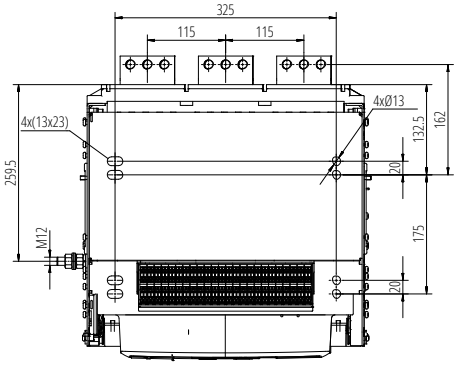

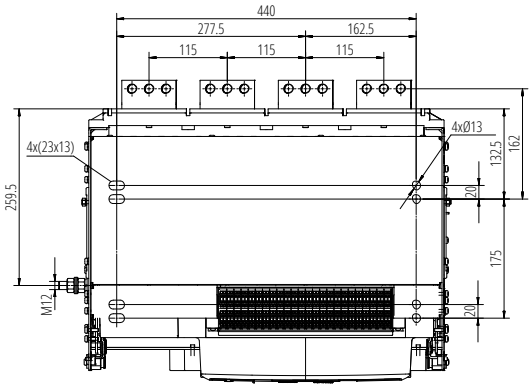

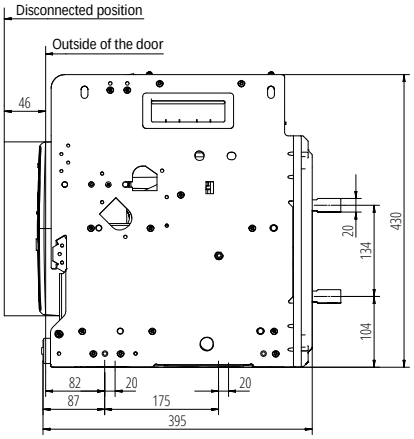

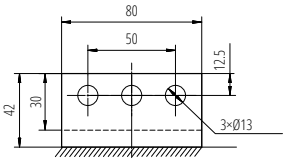

Standard type

Door escutheon cutout

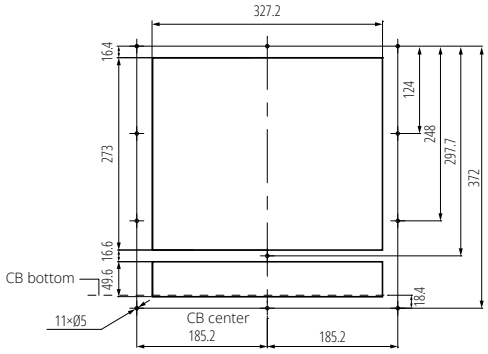

3P

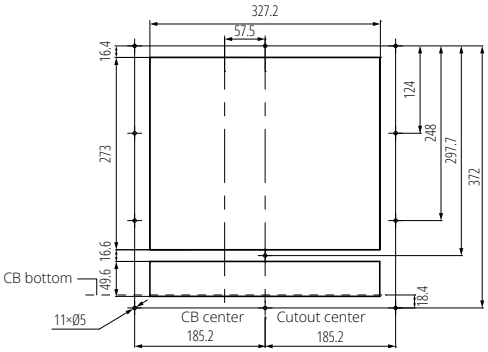

4P

Withdrawable Type (IZM67 4000A)

Front view

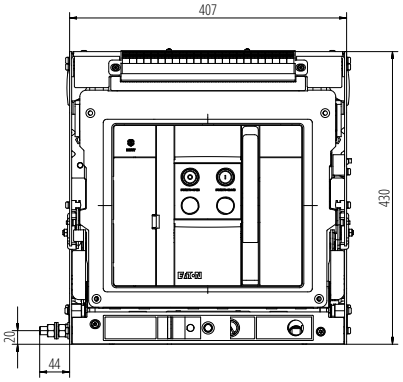

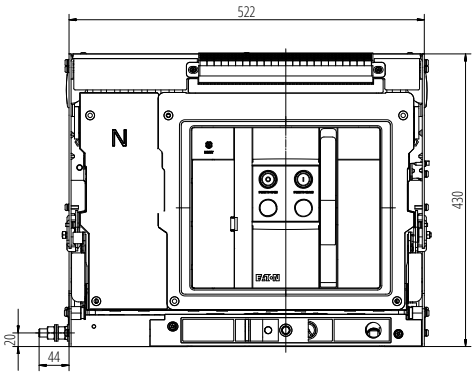

Vertical wiring

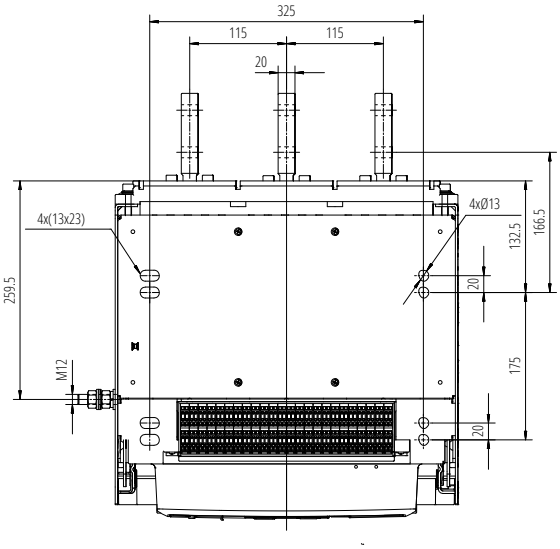

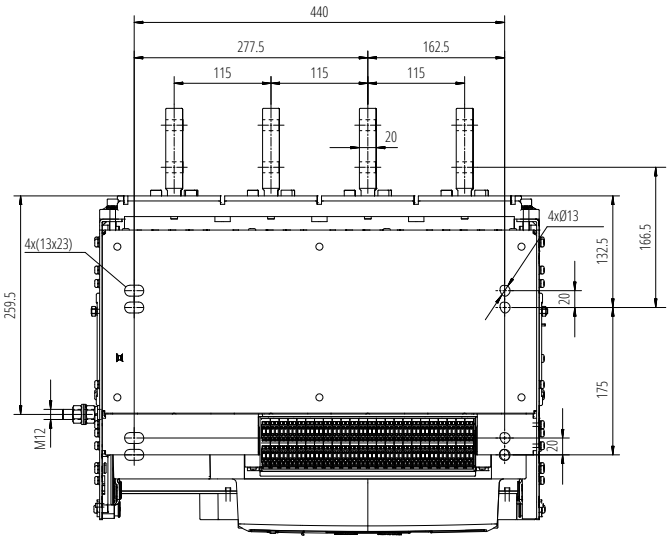

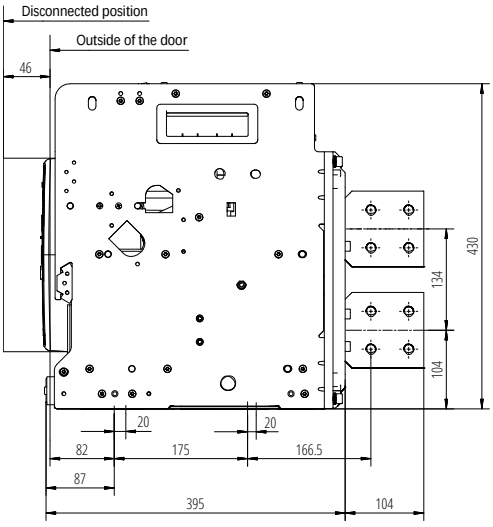

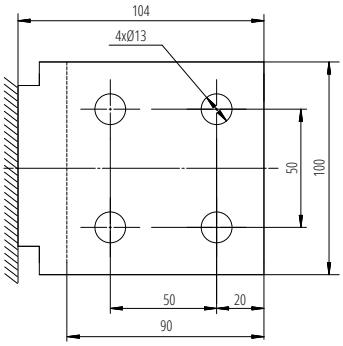

Withdrawable Type (IZM67 4000A)

Horizontal wiring

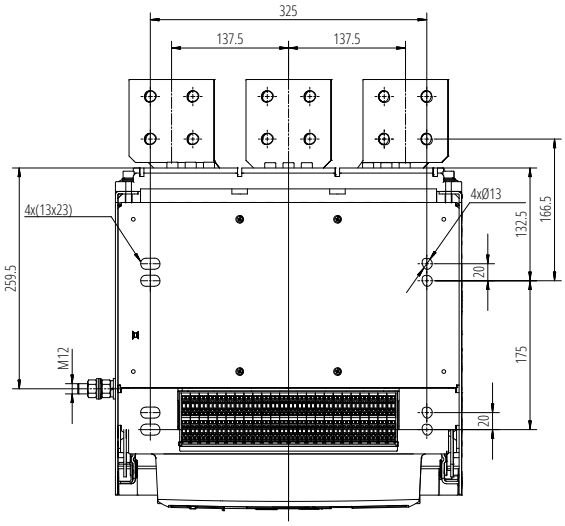

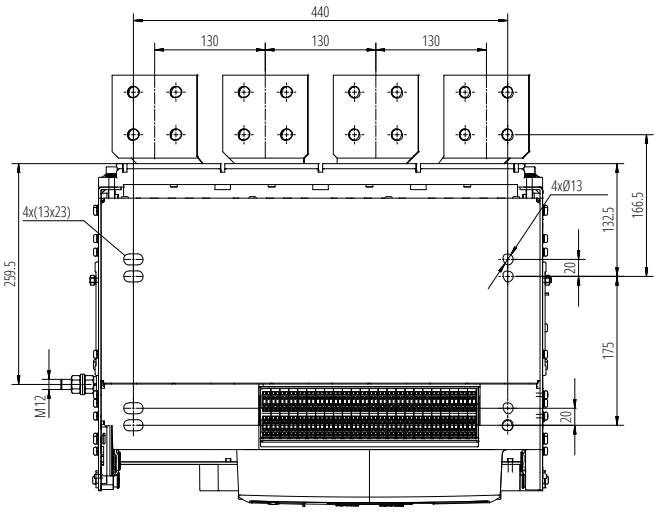

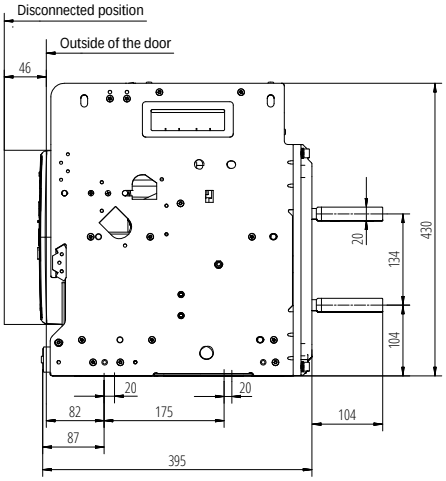

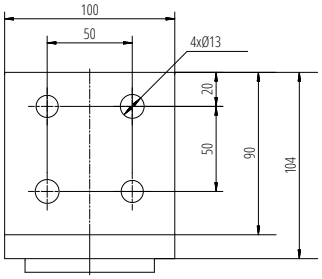

Door escutheon cutout

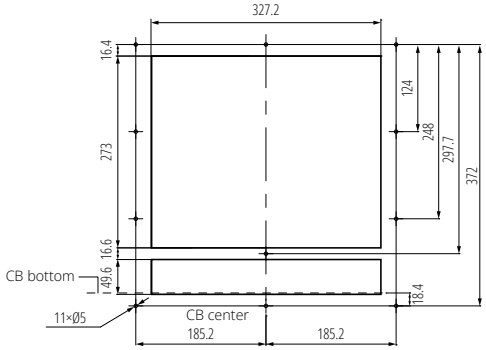

3P

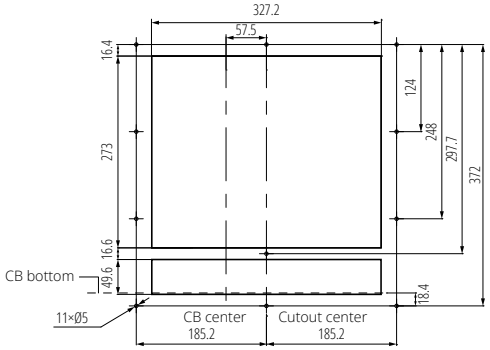

4P

Fixed Type (IZM67 2000-3200A)

Front view

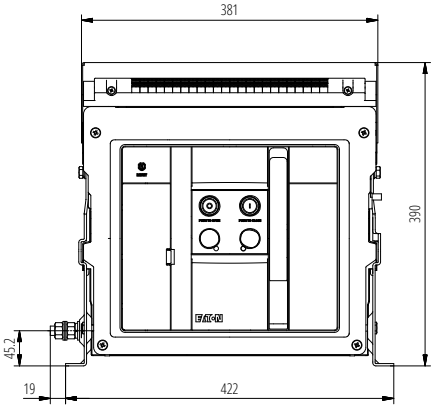

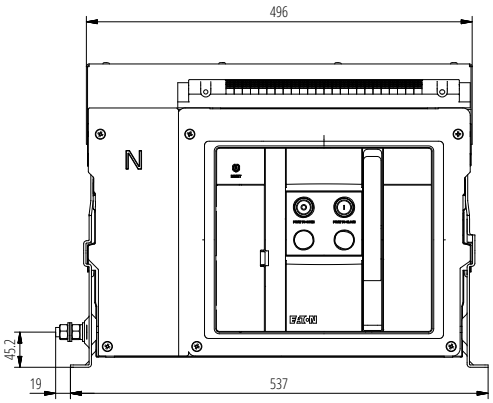

Vertical wiring

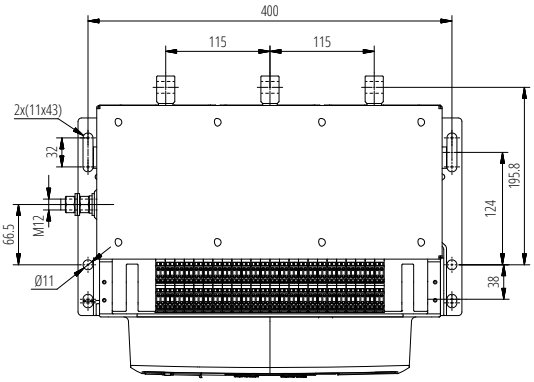

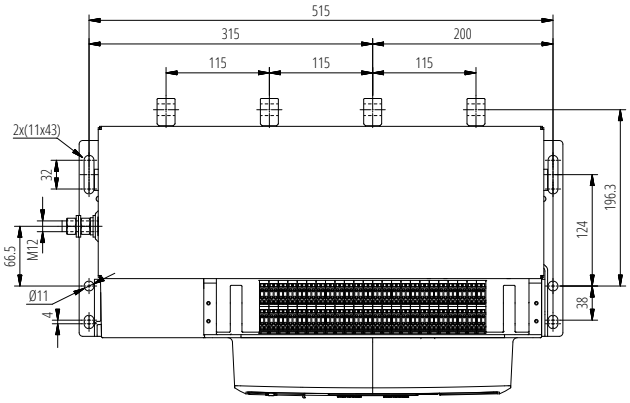

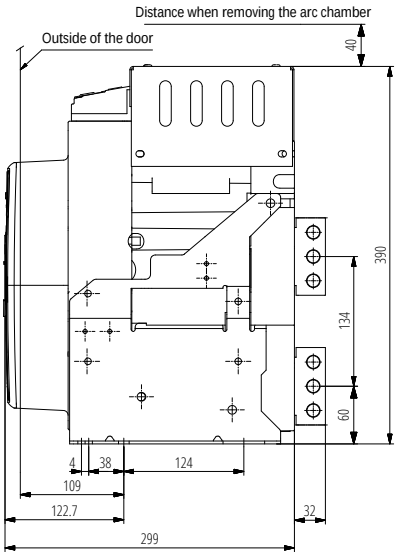

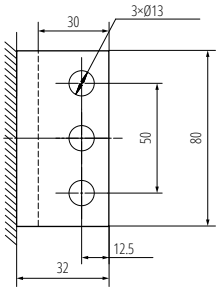

Standard type

Fixed Type (IZM67 2000-3200A)

Horizontal wiring

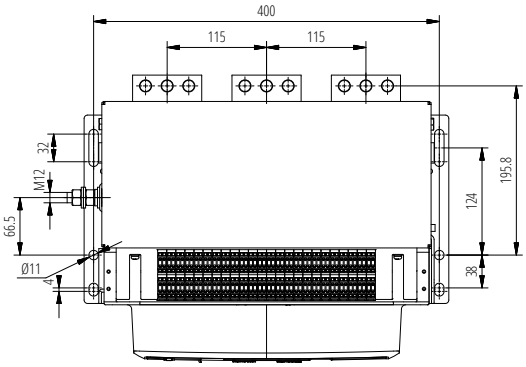

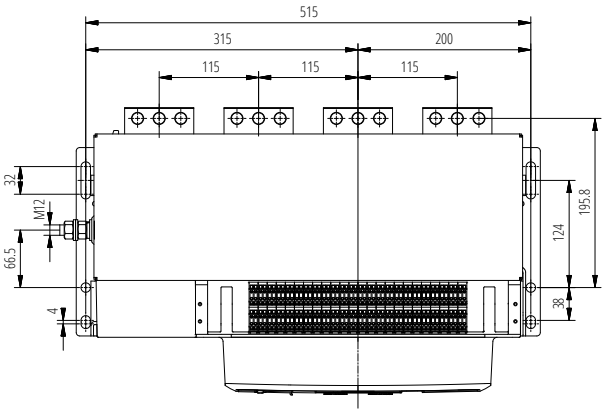

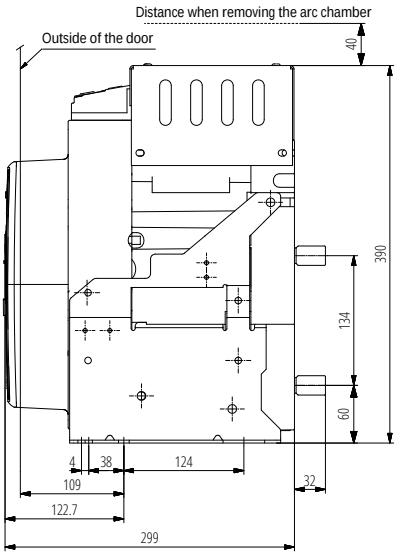

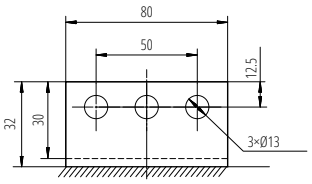

Standard type

Door escutheon cutout

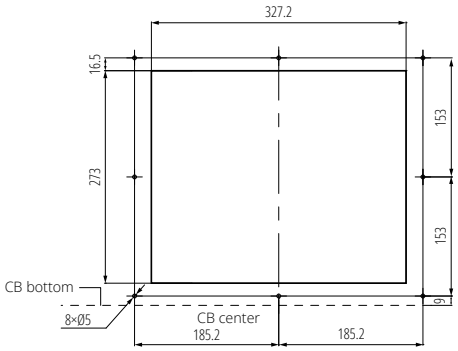

3P

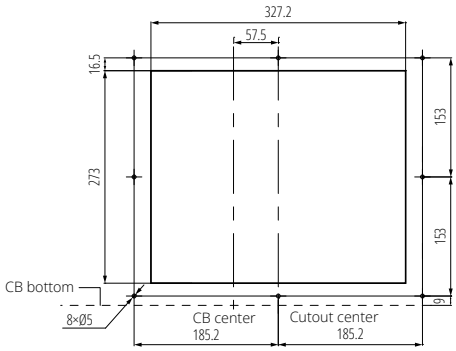

4P

Fixed Type (IZM67 4000A)

Front view

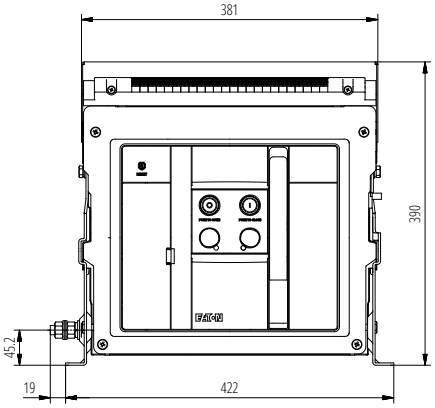

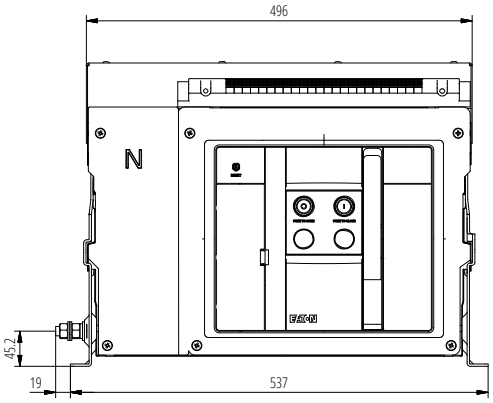

Vertical wiring

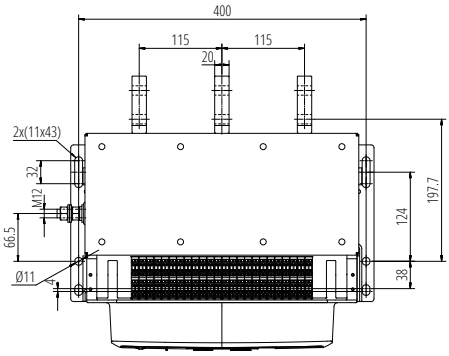

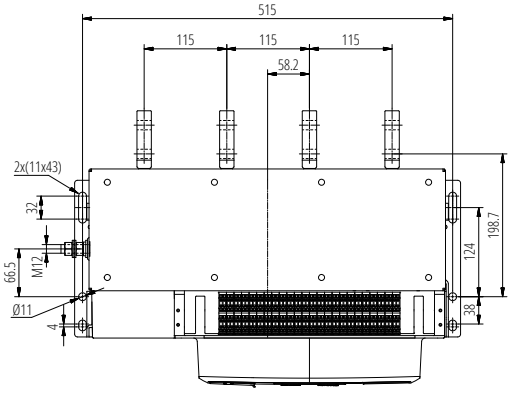

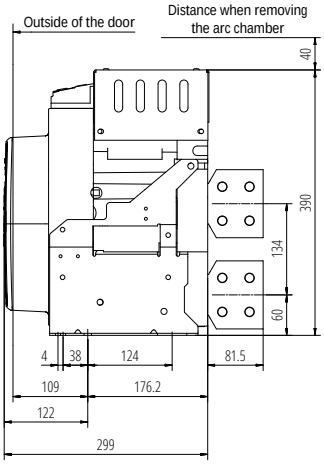

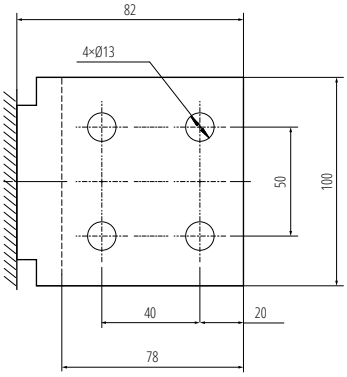

Fixed Type (IZM67 4000A)

Horizontal wiring

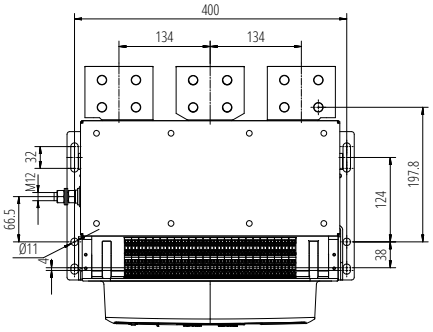

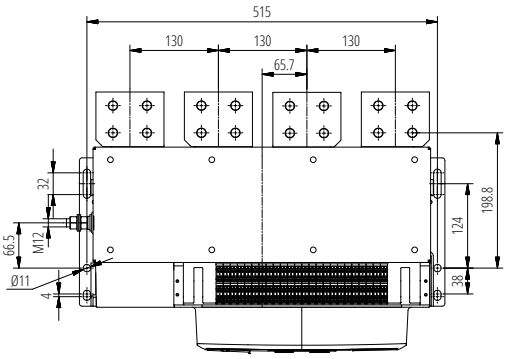

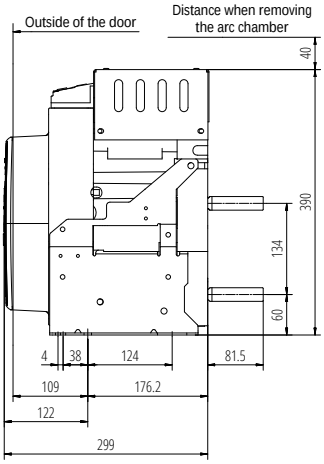

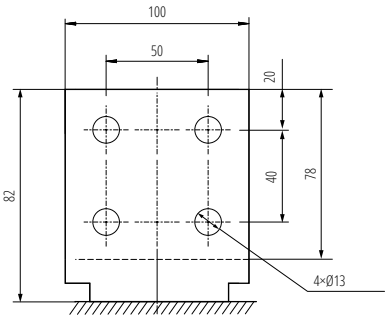

Door escutheon cutout

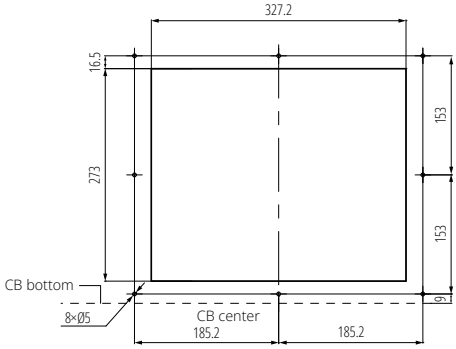

3P

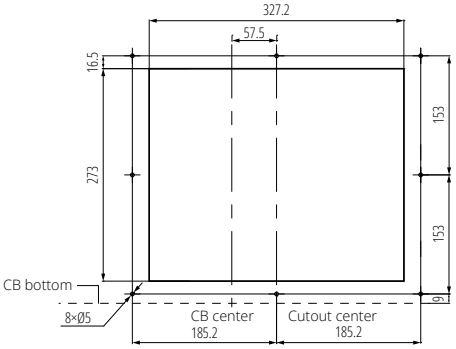

4P

IZM61 Withdrawable Type

Mechanical interlock

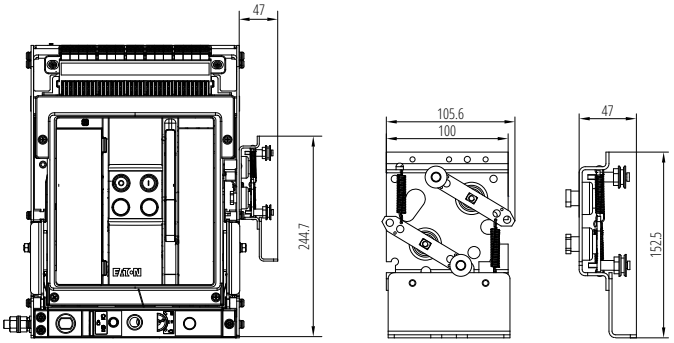

External auxiliary contacts

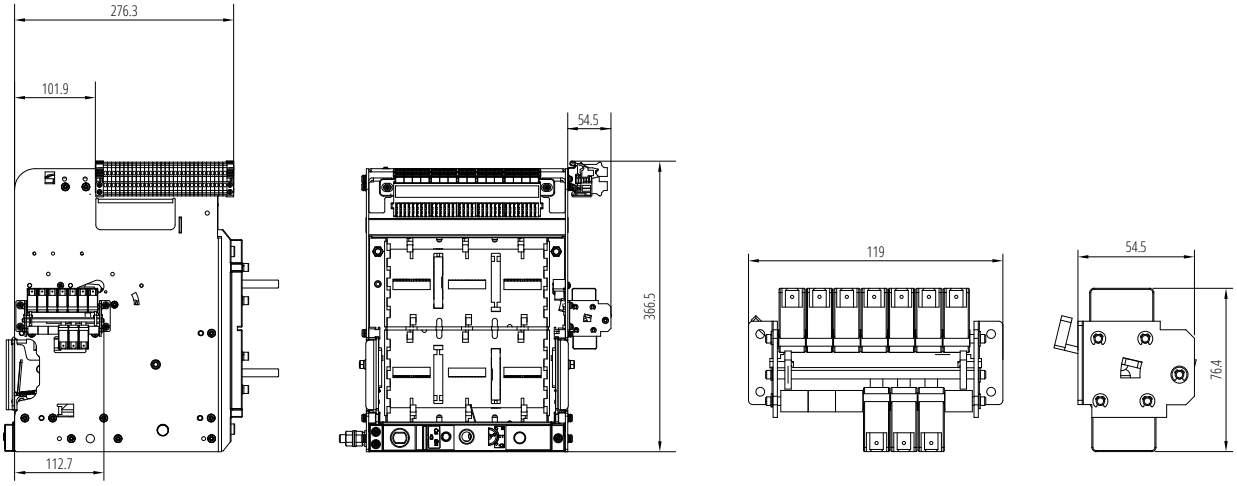

Position cell switch

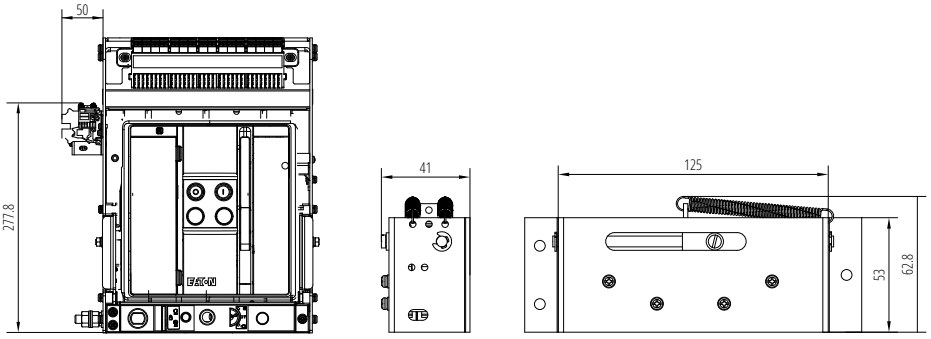

IZM61 Fixed Type

Mechanical interlock

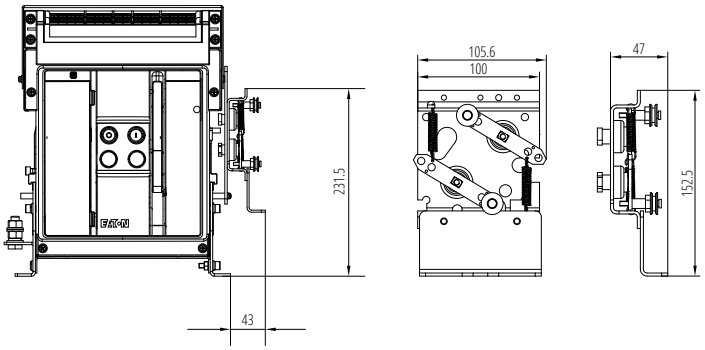

External auxiliary contacts

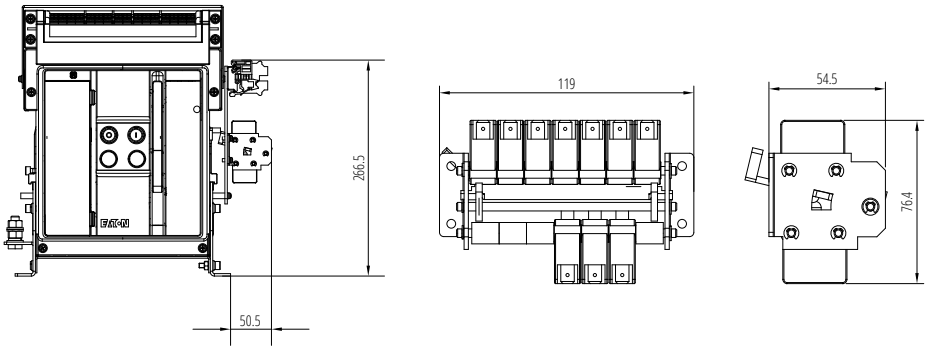

IZM65/67 Withdrawable Type

Mechanical interlock

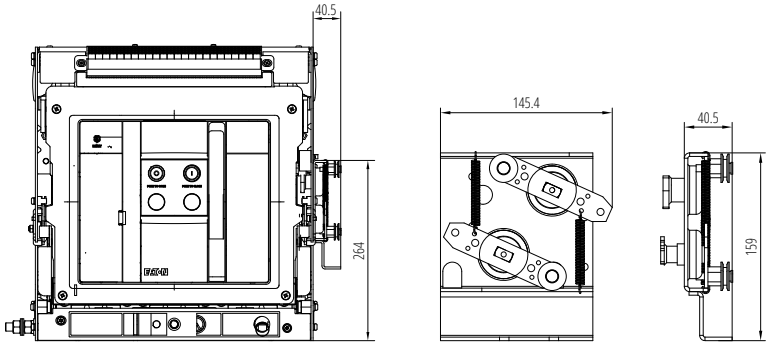

External auxiliary contacts

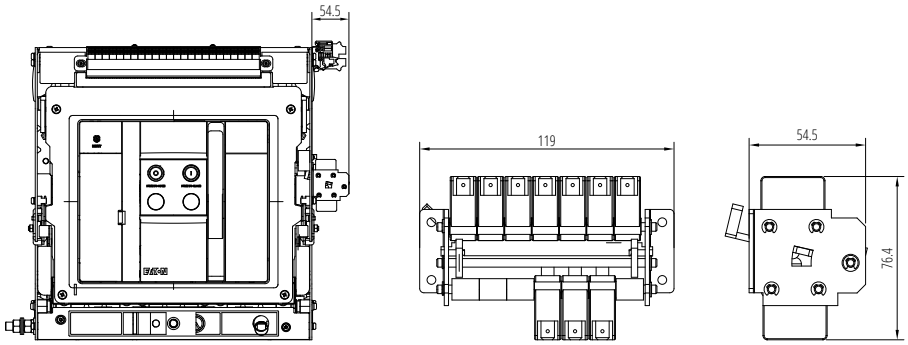

Cell switch

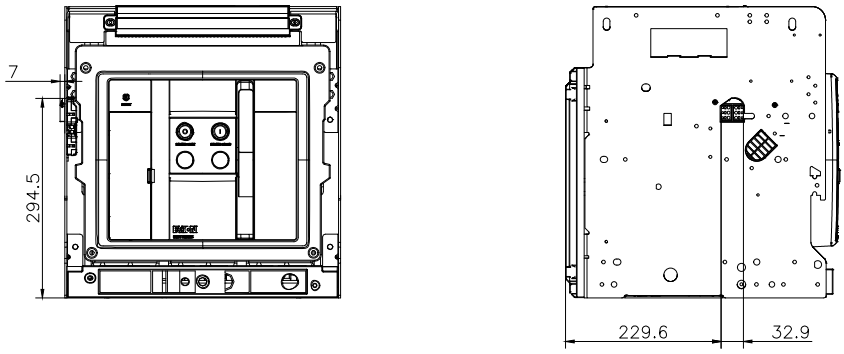

IZM65/67 Fixed Type

Mechanical interlock

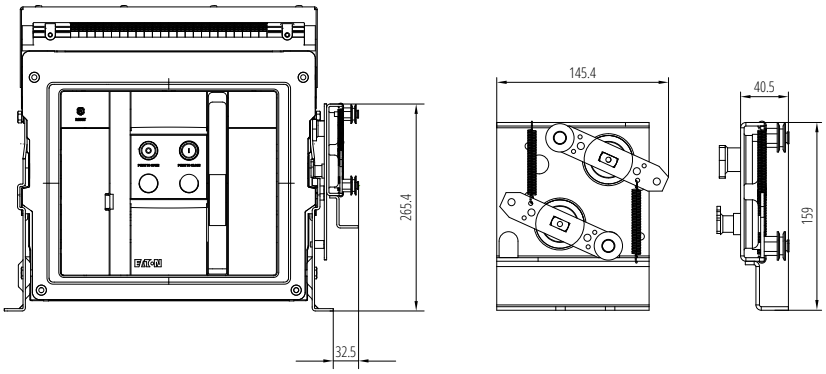

External auxiliary contacts

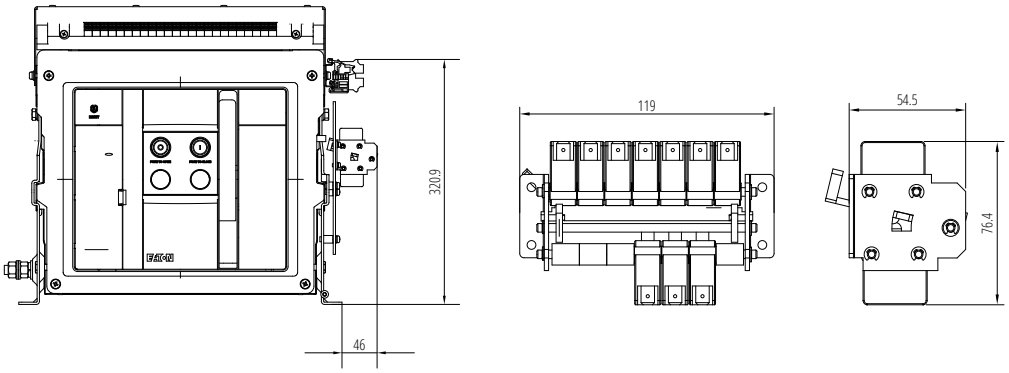

Open/Close door interlock kit

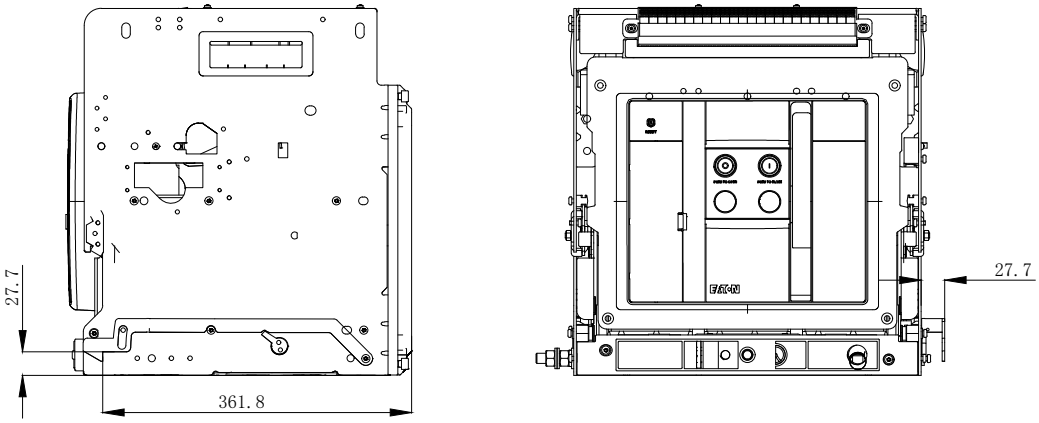

Recommended Safety Clearances

The following information about safety distances is intended to provide a guideline for the installation of circuit-breakers in an enclosure.

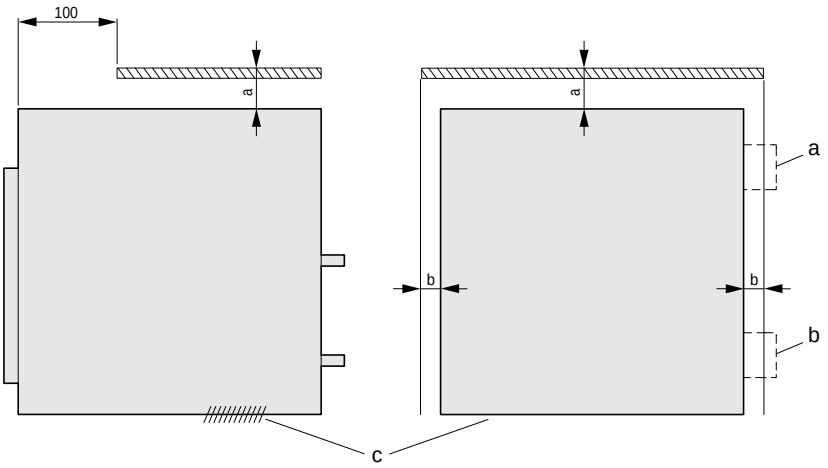

a Cell switch (optional)

b Cell switch (optional)

c Ventilation openings (do not cover!)

	Enclosure clearance	To insulated surface	To grounded metal surface	With cell switch or locking facilities
		mm	mm	mm
Withdrawable	a	0	0	0
	b	25	25	25/75
Fixed	a	150	250	–
	b	30	70	–

Recommended Enclosure Clearance and Ventilation

The illustration shows a typical enclosure.
The table below lists the minimum distances between enclosures and ventilation openings. This information is intended as a guideline for constructing a suitable circuit-breaker enclosure.

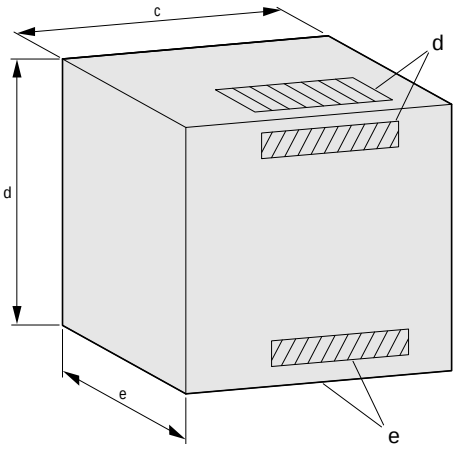

c	Width of cassette + 75mm	
d	550 mm	
e	450 mm (front control panel bay)	
Ventilation holes	160 cm² (800 - 3200 A) 320 cm² (4000 A)	} Top and bottom

Top or rear vent

Rear or lower vent

Complete Model Selection Guide for IZM6 Series Air Circuit Breaker

C	6	5	S	B	0	6	3	W	H	C	N	N	A	M	N	A	N	N	6	N	O	R	A	C	L	A	X
1	2	3	4	5	6	7	8	9	10	11	12	13	14	15	16	17	18	19	20	21	22	23	24	25	26	27	28

No.	Description	Specification and model code	Note
1	Product series	☐ C: IZM6	
2&3	frame	☐ 61: 1600A frame, current range: 200A-1600A ☐ 65: 2500A frame, current range: 400A-2500A ☐ 67: 4000A frame, current range: 2000A-4000A	
4&5	Switching capacity	☐ SB: 55KA @690VAC; ☐ SN: 66KA @690VAC; 1600A frame: 66KA@440VAC ☐ SS: 85KA@690VAC	
6&7	Current / Phase sequence	☐ 02: 200 ☐ 04: 400 ☐ 06: 630 ☐ 08: 800 ☐ 10: 1000 ☐ 12: 1250 ☐ 16: 1600 ☐ 20: 2000 ☐ 25: 2500 ☐ 32: 3200 ☐ 40: 4000	
8	poles	☐ 3: 3-pole ☐ 4: 4-pole	
9	Mounting method	☐ F: Fixed type ☐ W: Withdrawable type	
10	Terminal	☐ H: horizontal, in support of IZM61, IZM65, IZM67 ☐ V: vertical, in support of IZM67	
11	Language	☐ C: Chinese ☐ E: English	
12&13	Trip unit	☐ NN: N/A (switch disconnector) ☐ 1A: D ☐ 1B: DG ☐ 1C: A ☐ 1D: AG ☐ 1E: AC ☐ 1F: AGC ☐ 1G: P ☐ 1H: PG	
14	Shunt release	☐ N: N/A ☐ A: 24 VAC/DC ☐ D: 48 VAC/DC ☐ R: 110 VAC/DC ☐ B: 230 VAC/220 VDC ☐ C: 400 VAC	
15	Motor operator	☐ M: Manual operation ☐ R: 24 VAC/DC ☐ D: 48 VAC/DC ☐ B: 110 VAC/DC ☐ W: 230 VAC/220 VDC ☐ C: 400 VAC	
16	Closing release	☐ N: N/A ☐ A: 24 VAC/DC ☐ D: 48 VAC/DC ☐ R: 110 VAC/DC ☐ B: 230 VAC/220 VDC ☐ C: 400 VAC	

Complete Model Selection Guide for IZM6 Series Air Circuit Breaker (continued)

C	6	5	S	B	0	6	3	W	H	C	N	N	A	M	N	A	N	N	6	N	O	R	A	C	L	A	X
1	2	3	4	5	6	7	8	9	10	11	12	13	14	15	16	17	18	19	20	21	22	23	24	25	26	27	28

No.	Description	Specification and model code	Note
17&18&19	Under voltage/no voltage/second shunt release/operation counter	☐ NNN: N/A ☐ ANN: Operation counter ☐ BNN: 24 VAC/DC second shunt release ☐ CNN: 48 VAC/DC second shunt release ☐ DNN: 110 VAC/DC second shunt release ☐ ENN: 230 VAC/220 VDC second shunt release ☐ FNN: 400 VAC second shunt release ☐ GNN: Operation counter and 24 VAC/DC second shunt release ☐ HNN: Operation counter and 48 VAC/DC second shunt release ☐ INN: Operation counter and 110 VAC/DC second shunt release ☐ JNN: Operation counter and 230 VAC/220 VDC second shunt release ☐ KNN: Operation counter and 400 VAC second shunt release ☐ LNN: 24 VAC/DC under voltage ☐ MNN: 24 VAC/DC under voltage time delay 0.3S ☐ ONN: 24 VAC/DC under voltage time delay 0.5S ☐ PNN: 24 VAC/DC under voltage time delay 0.7S ☐ QNN: 24 VAC/DC under voltage time delay 1S ☐ RNN: 24 VAC/DC under voltage time delay 3S ☐ SNN: 24 VAC/DC under voltage time delay 5S ☐ TNN: 24 VAC/DC under voltage time delay 10S ☐ UNN: 48 VAC/DC under voltage ☐ VNN: 48 VAC/DC under voltage time delay 0.3S ☐ WNN: 48 VAC/DC under voltage time delay 0.5S ☐ XNN: 48 VAC/DC under voltage time delay 0.7S ☐ YNN: 48 VAC/DC under voltage time delay 1S ☐ ZNN: 48 VAC/DC under voltage time delay 3S ☐ NAN: 48 VAC/DC under voltage time delay 5S ☐ NBN: 48 VAC/DC under voltage time delay 10S ☐ NCN: 110 VAC/DC under voltage ☐ NDN: 110 VAC/DC under voltage time delay 0.3S ☐ NEN: 110 VAC/DC under voltage time delay 0.5S ☐ NFN: 110 VAC/DC under voltage time delay 0.7S ☐ NGN: 110 VAC/DC under voltage time delay 1S ☐ NHN: 110 VAC/DC under voltage time delay 3S ☐ NIN: 110 VAC/DC under voltage time delay 5S ☐ NJN: 110 VAC/DC under voltage time delay 10S ☐ NKN: 230 VAC/220 VDC under voltage ☐ NLN: 230 VAC/220 VDC under voltage time delay 0.3S ☐ NMN: 230 VAC/220 VDC under voltage time delay 0.5S ☐ NON: 230 VAC/220 VDC under voltage time delay 0.7S ☐ NPN: 230 VAC/220 VDC under voltage time delay 1S ☐ NQN: 230 VAC/220 VDC under voltage time delay 3S ☐ NRN: 230 VAC/220 VDC under voltage time delay 5S ☐ NSN: 230 VAC/220 VDC under voltage time delay 10S ☐ NTN: 400 VAC under voltage ☐ NUN: 400 VAC under voltage time delay 0.3S ☐ NVN: 400 VAC under voltage time delay 0.5S ☐ NWN: 400 VAC under voltage time delay 0.7S ☐ NXN: 400 VAC under voltage time delay 1S ☐ NYN: 400 VAC under voltage time delay 3S ☐ NZN: 400 VAC under voltage time delay 5S ☐ NNA: 400 VAC under voltage time delay 10S ☐ NNB: 24 VAC/DC no voltage ☐ NNC: 110 VAC/DC no voltage ☐ NND: 110 VAC/DC no voltage time delay 0.3S ☐ NNE: 110 VAC/DC no voltage time delay 0.5S ☐ NNF: 110 VAC/DC no voltage time delay 0.7S ☐ NNG: 110 VAC/DC no voltage time delay 1S ☐ NNH: 110 VAC/DC no voltage time delay 3S ☐ NNI: 110 VAC/DC no voltage time delay 5S ☐ NNJ: 230 VAC/220 VDC no voltage ☐ NNK: 230 VAC/220 VDC no voltage time delay 0.3S	

Complete Model Selection Guide for IZM6 Series Air Circuit Breaker (continued)

C	6	5	S	B	0	6	3	W	H	C	N	N	A	M	N	A	N	N	6	N	O	R	A	C	L	A	X
1	2	3	4	5	6	7	8	9	10	11	12	13	14	15	16	17	18	19	20	21	22	23	24	25	26	27	28

No.	Description	Specification and model code	Note
17&18&19	Under voltage/no voltage/Second shunt release/operation counter	☐ NNL: 230 VAC/220 VDC no voltage time delay 0.5S ☐ NNM: 230 VAC/220 VDC no voltage time delay 0.7S ☐ NNO: 230 VAC/220 VDC no voltage time delay 1S ☐ NNP: 230 VAC/220 VDC no voltage time delay 3S ☐ NNQ: 230 VAC/220 VDC no voltage time delay 5S ☐ NNR: 400 VAC no voltage ☐ NNS: 400 VAC no voltage time delay 0.3S ☐ NNT: 400 VAC no voltage time delay 0.5S ☐ NNU: 400 VAC no voltage time delay 0.7S ☐ NNV: 400 VAC no voltage time delay 1S ☐ NNW: 400 VAC no voltage time delay 3S ☐ NNX: 400 VAC no voltage time delay 5S	
20	External auxiliary contact	☐ 4: 4CO ☐ 6: 6CO ☐ 8: 8CO ☐ A: 10CO ☐ W: 12CO ☐ F: 14CO	4CO included in the circuit breaker's basic device
21	Trip indication	☐ N: N/A (switch disconnector) ☐ I: Interlock tripping indication (breaker)	N: Default configuration of switch disconnector I: Default configuration of circuit breaker
22	OTS	☐ N: N/A ☐ O: OTS ☐ T: 2nd OTS	N: Default configuration of switch disconnector O: Default configuration of circuit breaker
23	Remote reset	☐ N: N/A ☐ R: Remote reset	IZM65/67 only
24	Lock OFF position button	☐ N: N/A ☐ A: Type A lock ☐ B: Type B lock ☐ C: Type C lock	
25	LCS	☐ N: N/A ☐ C: LCS	
26	ON/OFF position safety lock	☐ N: N/A ☐ L: ON/OFF position safety lock	
27	Transport method	☐ A: Circuit breaker's basic device, fixed or withdrawable type ☐ W: Circuit breaker's basic device mounted into the cassette	
28	Special remark	☐ X: N/A	

About Eaton

Eaton is an intelligent power management company dedicated to protecting the environment and improving the quality of life for people everywhere. We make products for the data center, utility, industrial, commercial, machine building, residential, aerospace and mobility markets. We are guided by our commitment to do business right, to operate sustainably and to help our customers manage power — today and well into the future. By capitalizing on the global growth trends of electrification and digitalization, we're accelerating the planet's transition to renewable energy sources, helping to solve the world's most urgent power management challenges, and building a more sustainable society for people today and generations to come.

Eaton was founded in 1911 and has been listed on the New York Stock Exchange for more than a century. We reported revenues of $23.2 billion in 2023 and serve customers in more than 160 countries. Eaton entered the Chinese market in 1993 and has grown significantly since then. In 2004, Eaton moved its Asia-Pacific headquarters from Hong Kong to Shanghai. Today, Eaton has nearly 8,000 employees and 19 manufacturing facilities in China.

For more information about Eaton China, visit **www.eaton.com.cn**
Follow Eaton China WeChat account: **Eaton_China**

Eaton Corporation
Asia Pacific Headquarter
No.3, Lane 280, Linhong Road,
Changning District,
Shanghai 200335
Tel: 86-21-52000099
Fax: 86-21-52000200

© 2024 Eaton Corporation
All Rights Reserved
Printed in China
12-2024

Eaton is a registered trademark of Eaton Corporation.

All trademarks are property of their respective owners.

Powering Business Worldwide