Power Defense™

Molded Case Circuit Breaker

630~1600A

Powering Business Worldwide

Energizing a world that demands more.

We deliver:

- **Electrical solutions** that use less energy, improve power reliability and make the places we live and work safer and more comfortable
- **Hydraulic and electrical solutions** that enable machines to deliver more productivity without wasting power
- **Aerospace solutions** that make aircraft lighter, safer and less costly to operate, and help airports operate more efficiently
- **Vehicle drivetrain and powertrain solutions** that deliver more power to cars, trucks and buses, while reducing fuel consumption and emissions

Discover today's Eaton.

EATON

Powering Business Worldwide

Power Defense™ Molded Case Circuit Breakers

Product Description

System Overview 6

Technical Specification

Product Selection 8
Technical Data 9
Secondary Wiring Diagrams 10
Introduction to Trip Units 11
Technical Data 16

Ordering

Basic Device 21
Accessories 29

Features and Data

Tripping Characteristics 34
Let Through Characteristics 46
Selective Protection (PDC, NZM, FAZ) 48

Dimensions 67

Eaton's globally accepted Power Defense™ molded case circuit breakers (MCCBs) can safely and reliably distribute, switch, and control electrical energy through innovative protecting concept, and are widely used in industry, buildings and machinery manufacturing, bringing you more optimized solutions.

Power Defense molded case circuit breakers, a globally rated platform from Eaton.

SAFELY PROTECTED

Arcflash Reduction Maintenance System helps protect operators by reducing dangerous and potential arc flash incident energy levels, and enabling operator to activate this system from a safe distance without altering critical protection settings of the circuit breaker.

Zone Selective Interlock (ZSI) technology protects equipment by intelligently selecting faster trip times in coordinated systems, an advantage which can keep operators safe and productive.

Power Xpert® Release (PXR) electronic trip units are equipped with the latest microprocessor technology including advanced algorithms that notify you when your power distribution system needs to be maintained or replaced, **keeping your facility and equipment online, safe, and productive.**

EASILY COMMUNICATED

Power Defense MCCBs equipped with Power Xpert Release electronic trip units feature built-in communications allowing you to use fewer components and a simplified design while keeping your system connected, and customers informed. With the optional second independent communications channel through an external module, you have unprecedented connectivity options.

The PXR trip unit family has different models that will cover all of your needs, including fully programmable models that enable ultimate customizability and flexibility, as well as basic models that offer all of the benefits of electronic trip units, with simple set-up and coordination.

PXR technology provides the embedded ability to accurately measure energy consumption with no additional meters or equipment, delivering critical data about your power distribution system and energy use in your facility. PXR trip units record time-stamp captured events, and store critical data and waveforms associated with each event for fault analysis and timeline reconstruction.

GLOBALLY CERTIFIED

Power Defense MCCBs are globally certified to meet your local requirements while empowering you to design and build systems that can be used anywhere in the world. Wherever Eaton does business, Power Defense MCCBs are there, backed by Eaton ' s global support and fulfillment network, with the right resources in place to minimize your project lead-time andmaximize your uptime.

Integrating new products can be a challenge, which is why the Power Defense MCCBs are available with online instructions, support, and product selector: **these tools help you engineer work more efficiently and deliver your projects quickly and safely.**

PDC5 System Overview

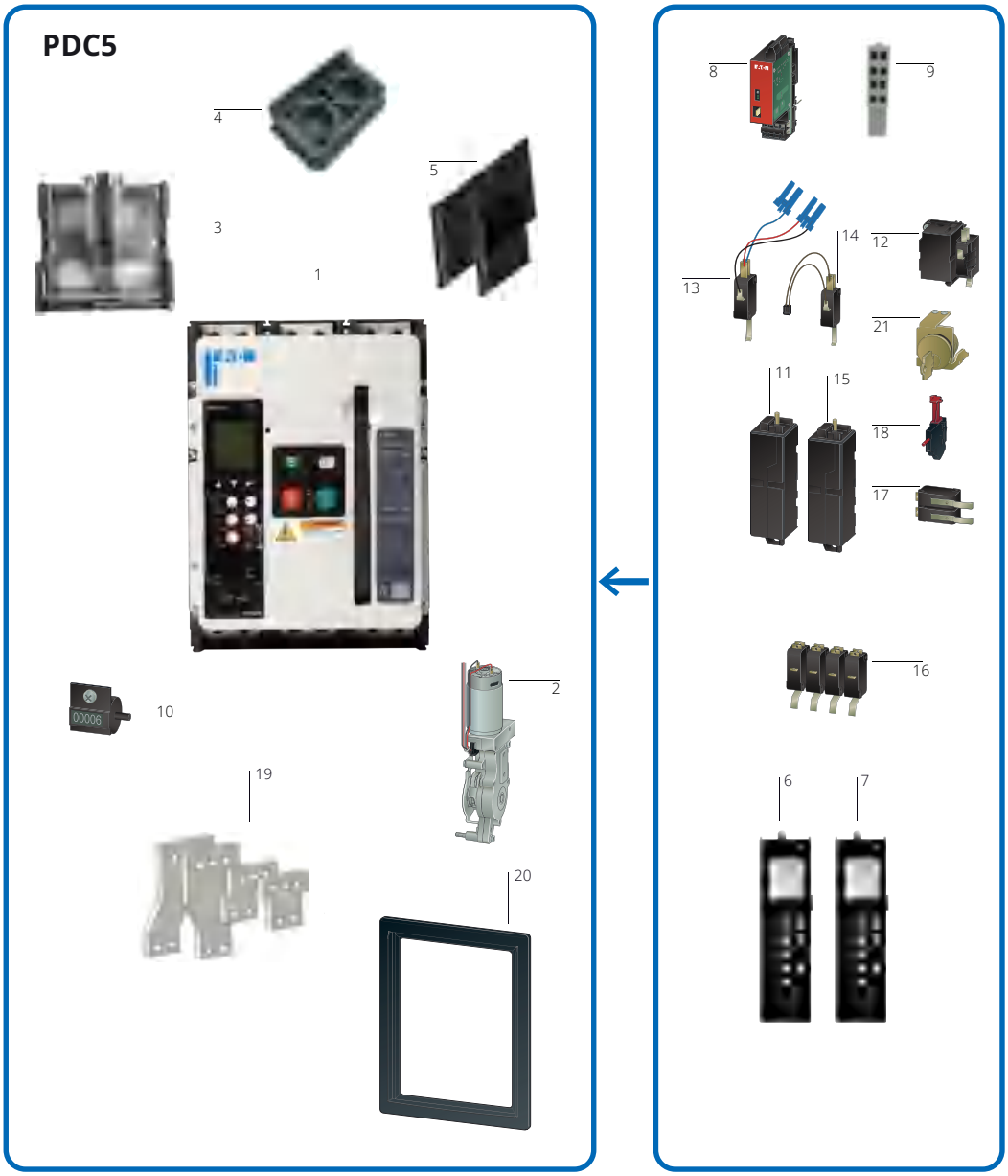

1	**PDC5 circuit breaker basic device**
2	**Motor operator** **Automatic charging of the spring force storage for remote or local opening/closing operations**
3	**Button cover** **Plastic or metal, with optional padlock**
4	**Wiring terminal cover**
5	**Phase barrier**
6	**Trip unit** **PXR20 trip unit, current metering** **C - Onboard Modbus communication** **G - Ground protection** **M - Arcflash Reduction Maintenance System**
7	**Electronic trip unit** **PXR25 trip unit, power metering**
8	**Communication modules** **External communication modules, rail mounting**
9	**Secondary circuit wiring terminal**
10	**Operations counter** **Count the number of circuit breaker's opening and closing operations**
11	**Shunt release** **Opens the circuit breaker via the secondary control circuit**
12	**Closing release** **Closes the circuit breaker via the secondary control circuit**
13	**Latch check switch (LCS)** **For external signals**
14	**Latch check switch (LCS)** **Wired to closing release**
15	**Under-voltage release** **Opens the circuit breaker by a voltage drop in the secondary control circuit**
16	**Standard auxiliary contact** **Circuit breaker's ON/OFF signal contact.** **2 ONs and 2 OFFs standard, 4 ONs and 4 OFFs maximum**
17	**Trip signal auxiliary contact (OTS)** **Trip signal contact initiated by the trip unit, 2 ONs and 2 OFFs**
18	**Red-pop trip indicator** **Red-pop trip indicator signals a trip by the trip unit**
19	**Extended board**
20	**Door escutcheon** **Mounted on the switchgear door.** **IP41 and IP55 door escutcheons available for circuit breaker**
21	**OFF position safety lock** **Key lock** **Locks the circuit breaker in OFF position**

Interruption Ratings

The Power Defense molded case circuit breaker line is marketed and sold worldwide, with multiple interruption ratings across a broad range of voltage levels. These interruption ratings are optimized for power distribution system and meet the broadest range of application needs. Refer to below table for the specific interruption levels.

K: 50kA	P: 85kA	H: 100kA

Power Defense Molded Case Circuit Breaker
Product Selection

PDC5 Electronic Type (Equipped as Standard with Motor Operator, Shunt Release and Closing Release)

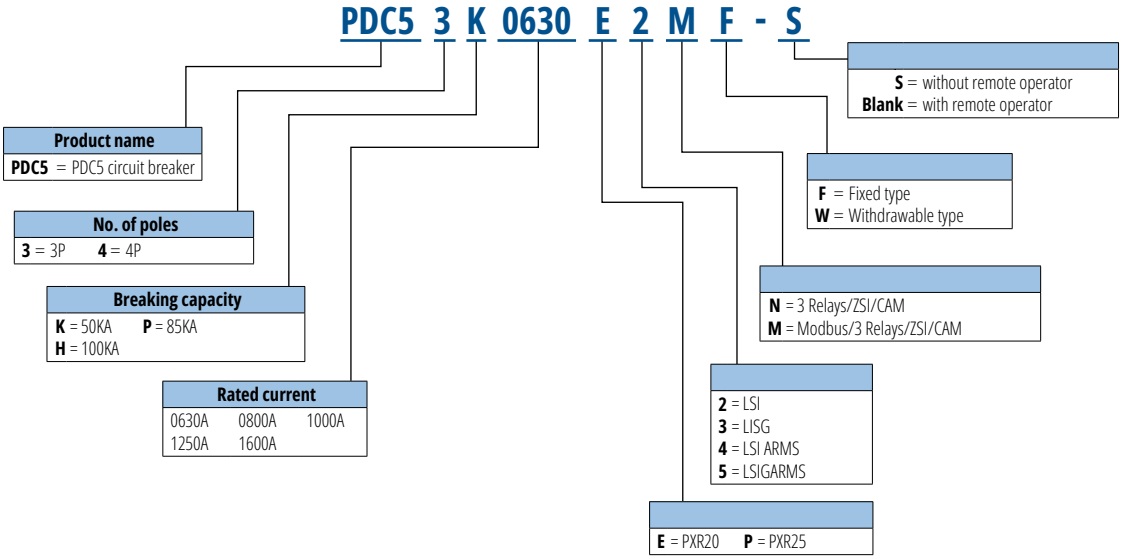

PDC5 Disconnecting Switch (Equipped as Standard with Motor Operator, Shunt Release and Closing Release)

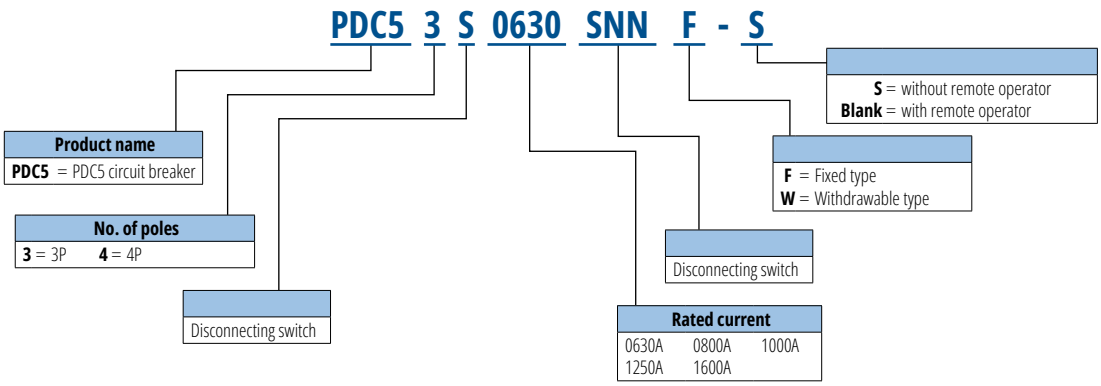

Circuit Breaker

			PDC5		
Max. rated current I_u, A			630 -1600		
No. of poles			3 & 4		
Breaking capacity (kA rms) Vac 50-60 Hz					
EC 60947-2	380-415 Vac	I_{cu}	50	85	100
		I_{cs}	50	85	100
	660-690 Vac	I_{cu}	25		
		I_{cs}	25		
I_{cm} rated short-circuit making capacity	220-240 Vac	I_{cm}			
	380-415 Vac	I_{cm}			
	440 Vac	I_{cm}			
	660-690Vac	I_{cm}	40		
	125-250 Vdc	I_{cm}			
Rated short-time withstand capacity	kA	I_{cw}	20		
Rated current range	A		630 -1600		
Utilization category			A		
Certificates			CE/CCC		
Max. rated current			630 -1600		
Rated insulation voltage to IEC 60947-2					
Main circuit V			1000		
Auxiliary circuit V			600		
Rated impulse withstand voltage Uimp					
Main circuit (kV)			8		
Auxiliary circuit (kV)			4		
Rated operating voltage Ue IEC/CCC, Vac			690		
Storage temperature			-25°C to 85°C		
Operating temperature			-25°C to 70°C		
Product complies with IEC 60068 Shock Test					
Mechanical life			10000 without maintenance		
			20000 with maintenance		
Electrical life to IEC/EN60947-4 Part B	AC-1 @415V		3000		
Product dimensions (inches) H x W x D					
3P			291*210*189		
4P			291*280*189		
Mounting method			Fixed type		
IP degree			IP20		
Pollution level			III		
Over-voltage category			III		

Power Defense Molded Case Circuit Breaker
Secondary Wiring Diagrams

Control Circuit Terminal Assignment

1	3	5	7	9	11	13	15	17	19	21	23	25	27	29	31	33	35	37	39	41	43	45	47	49	51	53	55
+	+																										
ST1	UV1	OT1C	OT1B	ACCY2	N1	ALMC	ALM2	G1	+24V	ZIN	ZCOM	CMM1	CMM3	PTVA	PTVC	MODBA	MODBG	ACCY5	ACCY7	EO1	SR1	C1	B1	C2	C3	B3	C4
−	−																										
ST2	UV2	OT1M	ACCY1	ACCY3	N2	ALM1	ALM3	G2	AGND	ARMSIN	ZOUT	CMM2	CMM4	PTVB	PTVN	MODBB	ACCY4	ACCY6	SC	EO2	SR2	A1	B2	A2	A3	B4	A4
2	4	6	8	10	12	14	16	18	20	22	24	26	28	30	32	34	36	38	40	42	44	46	48	50	52	54	56

1, 2 – Shunt release
3, 4 – Under-voltage release/2nd shunt release
5~7 – Trip signal auxiliary contact (OTS) (5-COM, 6-N.O., 7-N.C.)
8~10 – Trip signal auxiliary contact 2 (OTS) (8-COM, 9-N.O., 10-N.C.)
11, 12 – External neutral sensor
13~16 – Alarm
17, 18 – Ground circuit sensor
19, 20 – 24V DC control voltage
21, 23, 24 – Zone selectivity ZSI
20, 22 – Arcflash Reduction Maintenance System
25- 28 – External CAM communication module
29~32 – Voltage metering module
33~35 – Onboard Modbus
36 – ACCY4 (Reserved)
37~39 – Latch check switch (37-COM, 35-N.O., 39-N.C.)
40 – Charging spring status indication contact
41, 42 – Motor operator
43, 44 – Closing release
45~56 – Auxiliary contact (C-COM, A-N.O., B-N.C.)

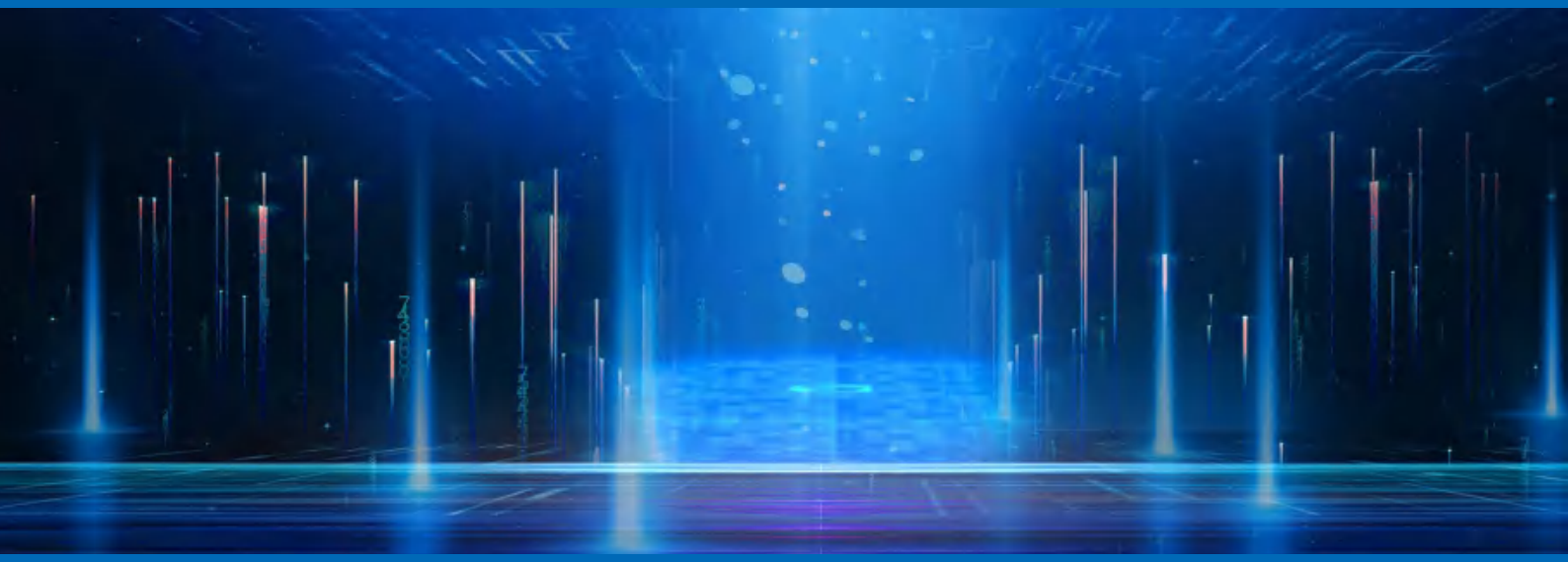

I Introduction to Trip Units I

The new generation electronic trip unit platform: Power Xpert Release (PXR)

- LCD display equipped as standard, and with support for Chinese language
- Current metering on PXR20 and power metering on PXR25
- Extended range for pickup values and delay timing settings
- Ground protection (G) and instantaneous protection (I) can be turned off via a rotary button.
- Integrated Modbus communication capability within trip unit (standard on PXR25 and optional on PXR20)
- MicroUSB interface for computer connection
- PXR Configuration and Test Tool to remotely configure and test the trip unit via a USB connection
  - Trip test
  - Waveform capture
  - Diagnostics
  - Long delay curve setting
  - ZSI/Thermal Memory on/off

PXR electronic trip unit

Comprehensive Communication Solutions

With the respective communication module-including onboard Modbus, external PCAM (Profibus-DP), MCAM (Modbus), or ECAM (Ethernet) modules - every circuit breaker of the IZM series (or Power Defense series?) is equipped for modern communication. The databus not only allows to transmit information, but also to receive commands/settings and configure the circuit breaker's settings.

Onboard Modbus communication is standard on the PXR25 trip unit and optional on the PXR20 trip unit upon order.

Additional PCAM, MCAM or ECAM module can be installed externally for both PXR20 and PXR25 to expand the communication capability. (No more than one external communication module can be installed). Remote opening and closing control can also be achieved through external CAM modules.

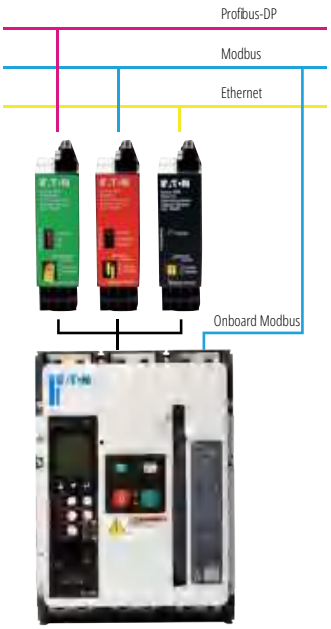

Arcflash Reduction Maintenance System™

The Arcflash Reduction Maintenance System (ARMS) technology provides maintenance personnel operate in a safer environment. When a short circuit fault or dangerous arc flash occurs, a circuit breaker with the ARMS function enabled can interrupt the fault current more quickly, significantly reducing the destructive energy of the incident.

The Arcflash Reduction Maintenance System ARMS technology can interrupt the current faster than instantaneous protection, thanks to its unique low-latency analog circuit. In contrast, ordinary protection functions typically require a microprocessor to process information and send commands, which can take tens of milliseconds.

The Arcflash Reduction Maintenance System function can be activated either through the rotary button on the trip unit or remotely through communication.

The Arcflash Reduction Maintenance System is optional on both PXR20 and PXR25 trip units.

Advanced Software Features - PXPM

Eaton's Power Xpert Protection Manager (PXPM) is a Microsoft®

Windows-based software that configures, controls, monitors and tests Eaton's PXR trip units. The user can create, modify, and save configurations for a PXR trip unit. The software further allows user to reset trip units, adjust trip unit's date and time, capture current or voltage waveforms, and perform trip or no-trip tests.

The software is available as a download from the following link:

http://www.eaton.com/PXPM

The PXR trip unit can be connected to a PC through the MicroUSB interface. By running Eaton's Power Xpert Release PC tool, you can perform the following operations:

- Automatically identify the trip unit type and version
- Read and download the current trip unit setting status
- Eliminate the need to repeatedly set up switches with the same configuration
- Set LSIG curves
- Configure zone interlocking or thermal memory switches
- Conduct on-site LSIG tests to check if the switch is in normal condition (recording trip multiples and times)
- Record and read waveforms during faults (up to 6 waveforms)
- Automatically export reports (including all settings and tests performed on the circuit breakers)

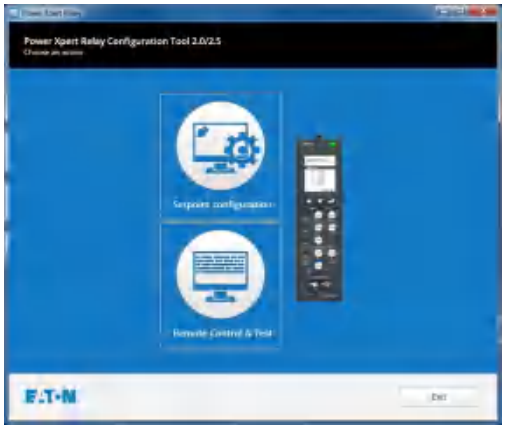

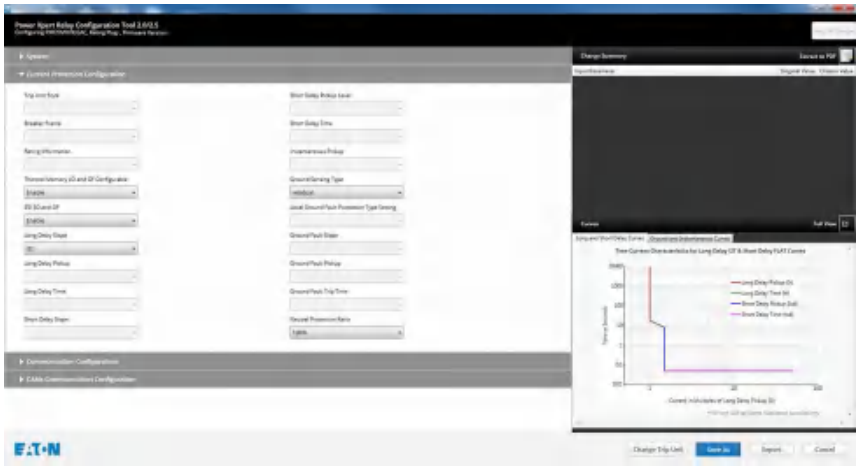

Zone Selectivity Interlocking

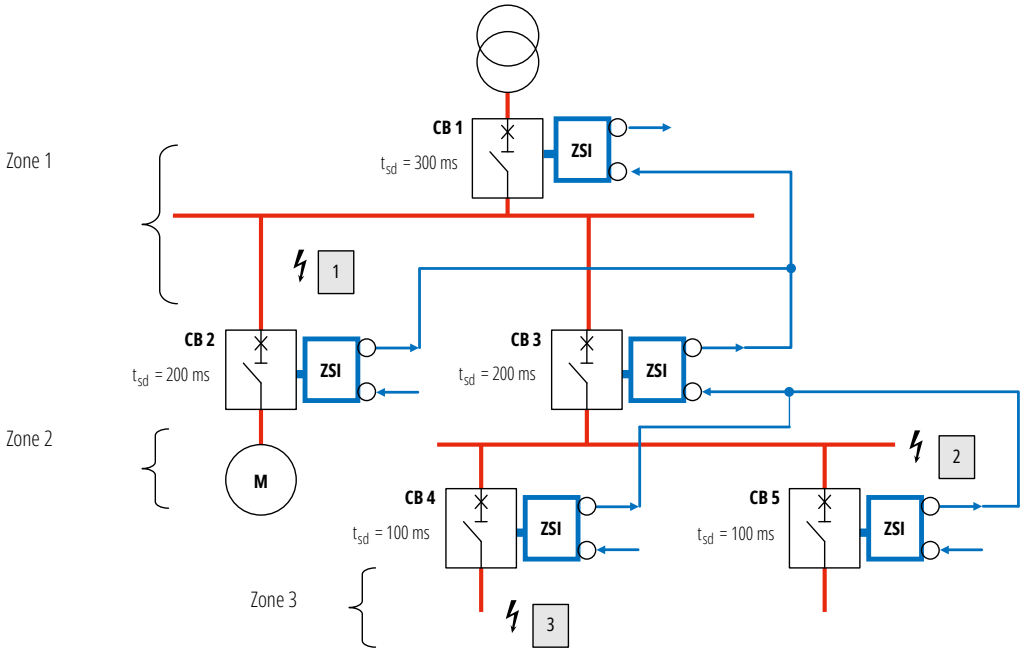

CB = Circuit Breaker
ZSI = Zone Selective Interlocking

Zone Selective Interlocking (ZSI)

- The ZSI function does not require additional functional modules. It can be achieved simply by connecting the circuit breakers in series with a set of cables. The ZSI function ensures that the upstream circuit breaker closest to the fault point quickly interrupts the current without delay in case of a malfunction.
- Compared to conventional selective power systems that rely on setting different delay times, zone selective interlocking (ZSI) can significantly reduce the interruption time, thereby minimizing the impact of short circuits on the system.
- For additional safety of maintenance staff, we recommend combining ZSI functionality with Arcflash Reduction Maintenance System to further reduce the release of destructive energy.

Zone Selective Interlocking Example

Example A – Short-circuit at Position 3

- Circuit-breakers CB1, CB3, CB4 all see the short circuit current and initiate a short delay pick-up.
- Circuit breaker CB4 sends a ZSI output blocking signal to CB3 ZSI input. CB3 sends a ZSI output blocking signal to CB1 ZSI input. CB1 sends a ZSI output signal that is not wired. This signal could be wired to a MV relay on the other side of the transformer with a compatible ZSI model.
- CB1 receives the ZSI input signal and starts its timer for 300ms. CB3 receives the ZSI input signal and starts its timer for 200ms. CB4 gets no input from any lower zone circuit breaker. This breaker will then trip immediately without any time delay. CB4 interrupts the fault and CB1 and CB3 stop short delay timing because the fault current is gone.
- If for some reason CB4 does not open and interrupt the fault, then at the end of the its short delay time CB3 will open and interrupt the fault.

Example B – Short-circuit at Position 2

- Circuit-breakers CB1, CB3, see the short circuit current and initiate a short delay pick-up. CB4 and CB5 do not see the fault current and do not send a ZSI output.
- Circuit breaker CB3 sends a ZSI blocking signal to CB1 ZSI input. CB1 sends a ZSI output signal. In this example that signal is not wired.
- CB1 receives the ZSI input signal and starts a timer for 300ms. CB3 gets no input from any lower zone circuit breaker. This breaker will then trip immediately without any time delay. CB3 interrupts the fault and CB1 stops short delay timing because the fault current is gone. The clearance time is reduced with the ZSI function by approximately 150ms.

Example C – Short-circuit at Position 1

- Only Circuit breaker CB1 sees the short circuit current and initiates a short delay pick-up. CB2, CB3, CB4 and CB5 do not see the fault current and do not send ZSI outputs.
- CB1 sends a ZSI output signal. In this example that signal is not wired.
- CB1 gets no input from any lower zone circuit breaker. This breaker will then trip immediately without any time delay. CB1 interrupts the fault and the clearance time is reduced by approximately 250ms.

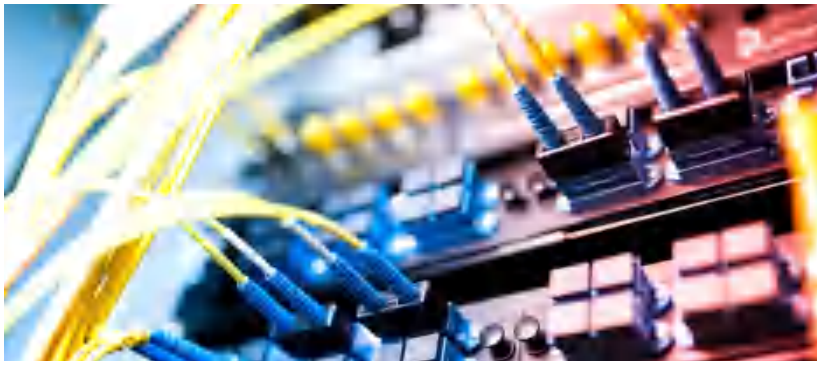

General Purpose Relay Mapping

The PXR family supports three general purpose relay contacts. Any relay in the PXR can be configured to any one of the functions. The mapping is conveniently done using the Power Xpert Protection Manager software. Relays require auxiliary power to operate.

Function Name	Description of Relay Operation: " The relay will close when ... "	Description of Relay Operation: " The relay will open when ... "
Overload Trip	there is a Long Delay or Over-temperature trip	RESET button is pressed or communications reset command received
Neutral Current Trip	there is a Neutral Current trip	RESET button is pressed or communications reset command received
Short Delay Trip	there is a Short Delay trip	RESET button is pressed or communications reset command received
Instantaneous Trip	there is an Instantaneous trip or MCR trip	RESET button is pressed or communications reset command received
Short Circuit Trip	there is a Short, Instantaneous or High Instantaneous trip	RESET button is pressed or communications reset command received
Ground Fault Trip	there is a Ground Fault trip	RESET button is pressed or communications reset command received
Maintenance Mode Trip	there is a Maintenance Mode trip	RESET button is pressed or communications reset command received
All Trips	there is any type of protective trip (Overload, Neutral Current, Short Delay, Instantaneous, Ground, Maintenance Mode)	RESET button is pressed or communications reset command received
High Load 1	current flow is greater than set point (adjustable from 50% to 120% of I_r)	current flow falls 5% below the set point
High Load 2	current flow is greater than set point (adjustable from 50% to 120% of I_r)	current flow falls 5% below the set point
Over Temperature	temperature exceeds 5C below the level of the over temperature trip setting	temperature falls 5C below the trip setting
Ground Fault Pre-Alarm	ground current is greater than the set point (adjustable from 50% to 100%)	ground current falls 5% below the set point
Thermal Memory	the Thermal Memory value is greater than the set point (adjustable from 50% to 100%)	the Thermal Memory value falls 5% below the sept point
Watchdog	auxiliary power is active and the trip unit is healthy and operating.	there is an error in the trip unit detected from any of the self-diagnostic methods
Low Battery	the battery is below 1 bar (20%)	the battery value is 1 bar (20%) or higher
Internal (HW) Fault	there is an internal fault detected	RESET button is pressed or communications reset command received
Setpoint Mismatch	a setpoint in the trip unit does not match the CAM's copy	RESET button is pressed or communications reset command received
Breaker Health Alarm	the health value is below 25%	the health value is at or above 25%
Communication Fault	any external communications error occurs	RESET button is pressed or communications reset command received
All Fault	Any Internal Fault, Setpoint Mismatch, Breaker Health Alarm or Communication Fault is active	Any Internal Fault, Setpoint Mismatch, Breaker Health Alarm or Communication Fault is inactive
Auxiliary Contact	breaker is closed	breaker is open
Trip Contact	breaker is tripped	breaker is not tripped (open or closed)
Maintenance Mode Active	the trip unit is in the Maintenance Mode	when the trip unit exits the Maintenance Mode
ZSI Active	the ZSI function active	ZSI is not active
ZSI Input Received	a ZSI INPUT signal is received	RESET button is pressed or communications reset command received
ZSI Output Sent	a ZSI OUTPUT signal is sent	RESET button is pressed or communications reset command received
Open Breaker Pulse	an OPEN breaker command from any of the communications channels is received	2 seconds after the OPEN breaker command is received
Close Breaker Pulse	a CLOSE breaker command from any of the communications channels is received	2 seconds after the CLOSE breaker command is received
Output	an Output Active command for the specified relay is received on any communication channel	an Output Inactive command for the specified relay is received on any communication channel
OFF	the relay is disabled	the relay is disabled

Power Defense Molded Case Circuit Breaker
Technical Data

	PXR20	**PXR25**
Long delay protection (L)		
Long delay pickup (I_r), × I_n	0.4, 0.5, 0.6, 0.7, 0.75, 0.8, 0.9, 0.95, 0.98, 1.0	0.4, 0.5, 0.6, 0.7, 0.75, 0.8, 0.9, 0.95, 0.98, 1.0
Long delay time t_r (6 × I_r)	0.5, 1, 2, 4, 7, 10, 12, 15, 20, 24 s	0.5, 1, 2, 4, 7, 10, 12, 15, 20, 24 s
Short delay protection (S)		
Short delay pickup (I_{sd}), × I_r	1.5, 2, 2.5, 3, 4, 5, 6, 7, 8, 10	1.5, 2, 2.5, 3, 4, 5, 6, 7, 8, 10
Short delay time t_{sd} – Fixed time Flat	0.0, 0.1, 0.2, 0.3, 0.4, 0.5 s[1)]	0.0, 0.1, 0.2, 0.3, 0.4, 0.5 s[1)]
Short delay time t_{sd} – Inverse timeI^2t (at8 × I_r)	0.1, 0.3, 0.4, 0.5 s	0.1, 0.3, 0.4, 0.5 s
Instantaneous protection (I)		
Instantaneous pickup (I_i), × I_n	OFF, 2, 4, 5, 6, 7, 8, 10, 12, 15	OFF, 2, 4, 5, 6, 7, 8, 10, 12, 15
Ground fault protection (G), optional		
Ground fault alarm pickup (A), × I_n	0.2, 0.4, 0.6, 1.0	0.2, 0.4, 0.6, 1.0
Ground fault trip pickup (I_g), × I_n	OFF, 0.2, 0.4, 0.6, 0.8, 1.0	OFF, 0.2, 0.4, 0.6, 0.8, 1.0
Ground fault delay t_g –Fixed time Flat	0.1, 0.2, 0.3, 0.4, 0.5 s	0.1, 0.2, 0.3, 0.4, 0.5 s
Ground fault delay t_g –Inverse time I^2t	0.1, 0.2, 0.3, 0.4, 0.5 s	0.1, 0.2, 0.3, 0.4, 0.5 s
Over temperature trip	●	●
Thermal memory	●	●
Zone selective interlocking (ZSI)	●	●
Making current release (MCR)	●	●
Trip unit functions		
System diagnosis		
Status / Overload LED display	●	●
Trip signal indicator	●	●
Trip current amplitude	●	●
High load or ground alarm contact	●	●
System monitoring		
LCD display	●[2)]	●[2)]
Current metering accuracy	± 1% of reading	±1% of reading
Current harmonics THD	–	±10% of reading[4)]
Line voltage metering accuracy	–	±1% of reading [3)]
Voltage harmonics THD	–	±10% of reading[4)]
Power and energy metering accuracy	–	±2% of reading [3)]
Apparent power kVA	–	●[3)]
Reactive power kVAR	–	●[3)]
Power factor	–	●[3)]
Communication		
Onboard integration (Modbus)	○	●
External (CAM Module)	○	○
Power supply	+24 VDC, optional	+24 VDC, optional
Other functions		
Trip test	Integral	Integral
Maintenance mode (Arcflash Reduction Maintenance System TM)	○	○
Trip logging	●	●
Electronic counter	●	●
Wave capturing	●	●
Circuit breaker health monitoring	●	●

Notes:
1) 0.1s: trip time is 0.06s to 0.1s; 0s: nominal clear time is 60ms with external power and 120ms without.
2) Requires external 24VDC control voltage supply when continuous current below 20% of In
3) Requires external voltage module (IZMC2-PXR-PTM-2) to provide voltage singlet to trip unit; each PTM can connect up to 16 molded case circuit breakers
4) Only on PXR 02.02 and higher version
● Standard ○ Optional – Not available

Protection and Metering Features

Trip Unit Features

Table 1. Trip unit feature

Trip unit type	Protection type	High load alarm	Ground fault	Maintenance mode	Modbus RTU
PXR 20	LSI	•			
	LSIG		•		
	LSIGR		•	•	•
	LSIR	•		•	•
PXR 25	LSIR	•		•	•
	LSIGR		•	•	•

Protection Features

Table 2. Protection features

Protection			PXR 20	PXR 25
Long delay protection (L)	Slope		I^2t, I^4t, $I^{0.5}t$, It	I^2t, I^4t, $I^{0.5}t$, It
	Long delay pickup (I_r)	x (I_n)	0.4, 0.5, 0.6, 0.7, 0.75, 0.8, 0.9, 0.95, 0.98, 1.0	0.4, 0.5, 0.6, 0.7, 0.75, 0.8, 0.9, 0.95, 0.98, 1.0
	Long delay time @ 6 x (I_r)	Sec	0.5, 1, 2, 4, 7, 10, 12, 15, 20, 24①	0.5, 1, 2, 4, 7, 10, 12, 15, 20, 24①
	Thermal memory		Included	Included
	High load alarm	% x (I_r)	Fixed at 85%	Fixed at 85%
Short delay protection (S)	Short delay slope		Flat,I^2t	Flat,I^2t
	Short delay pickup	x (I_r)	1.5, 2, 2.5, 3, 4, 5, 6, 7, 8, 10	1.5, 2, 2.5, 3, 4, 5, 6, 7, 8, 10
	Short delay time 8 x (I_r) I^2t	Sec	0.1, 0.3, 0.4, 0.5	0.1, 0.3, 0.4, 0.5
	Short delay time – Flat	Sec	0.0, 0.1, 0.2, 0.3, 0.4, 0.5	0.0, 0.1, 0.2, 0.3, 0.4, 0.5
	ZSI		Enable/Disable	Enable/Disable
Instantaneous protection (I)	Instantaneous	x (I_n)	Off, 2, 4, 5, 6, 7, 8, 10, 12, 15	Off, 2, 4, 5, 6, 7, 8, 10, 12, 15
Neutral protection	4th pole or external neutral trip	% x (I_r)	0 (Off), 60, 100	0 (Off), 60, 100
Ground fault protection (Option G)	Ground fault pickup	x (I_n)	Off, 0.2, 0.4, 0.6, 0.8, 1.0	Off, 0.2, 0.4, 0.6, 0.8, 1.0
	Ground fault alarm	x (I_n)	0.2, 0.4, 0.6, 1.0	0.2, 0.4, 0.6, 1.0
	Gound fault delay 0.625 x (I_n) I^2t	Sec	0.1, 0.2, 0.3, 0.4, 0.5	0.1, 0.2, 0.3, 0.4, 0.5
	Gound fault delay - Flat	Sec	0.1, 0.2, 0.3, 0.4, 0.5	0.1, 0.2, 0.3, 0.4, 0.5
	ZSI		Enable/Disable	Enable/Disable
	Thermal memory		Included	Included
Maintenance mode protection (ARMS) (Option R)	Pickup		Enable or Disable/Remote	Enable or Disable/Remote
	Relay contact for remote mode indication		Included	Included
	Maintenance mode pickup	x (I_n)	2.5, 4.0, 6.0, 8.0, 10.0	2.5, 4.0, 6.0, 8.0, 10.0
General	Over temperature trip	Degrees	Fixed at 85 ° C (185 ° F)	Fixed at 85 ° C (185 ° F)

① Not all time values are selectable when the slope is set to I^4t. Refer to the Time-Current Curves.

Metered Current and Voltage Data

Table 3. Metered current and voltage data

Current metering	Unit	Accuracy①	Note
IA, IB, IC, IN, IG	Amperes	± 1% of reading	
Min IA, IB, IC, IN, IG	Amperes	± 1% of reading	Retain group values until reset
Max IA, IB, IC, IN, IG	Amperes	± 1% of reading	Retain group values until reset
THD IA, IB, IC, IN, IG		± 1% of reading	Firmware Version 02.02 and later
Voltage metering ③	**Unit**	**Accuracy②**	**Note**
VAB, VBC, VCA	Volts	± 1% of reading	Line voltage
Min VAB, VBC, VCA	Volts	± 1% of reading	Retain group values until reset
Max VAB, VBC, VCA	Volts	± 1% of reading	Retain group values until reset
THD VAB, VBC, VCA		± 1% of reading0%	Firmware Version 02.02 and later
VAN, VBN, VCN	Volts	± 1% of reading	Phase voltage
Min VAN, VBN, VCN	Volts	± 1% of reading	Retain group values until reset
Max VAN, VBN, VCN	Volts	± 1% of reading	Retain group values until reset
THD VAN, VBN, VCN		± 1% of reading0%	Firmware Version 02.02 and later

① Accuracy applies to 10% to 120% of I_n at 25°C (77°F).

② Accuracy applies to 34 to 690Vac voltage range at 25°C (77°F).

③ Only available on PXR25

Metered Power and Energy Data

Table 4. Metered power and energy data

Power metering ③	Unit	Accuracy ①②	Note
Active power	kW	± 2% of reading	Approximately updated every second
Apparent power	kVA	± 2% of reading	Approximately updated every second
Reactive power	kvar	± 2% of reading	Approximately updated every second
Active demand	kW	± 2% of reading	5-minute fixed window
Apparent demand	kVA	± 2% of reading	5-minute fixed window
Reactive demand	kvar	± 2% of reading	5-minute fixed window
Active demand (peak)	kW	± 2% of reading	Retain group values until reset
Apparent demand (peak)	kVA	± 2% of reading	Retain group values until reset
Reactive demand (peak)	kvar	± 2% of reading	Retain group values until reset
Power factor④	-		Approximately updated every second
Energy metering ③	**Unit**	**Accuracy ①②**	**Note**
Active energy total	kWh	± 2% of reading	Forward + Reverse
Active energy net	kWh	± 2% of reading	Forward - Reverse
Active energy forward	kWh	± 2% of reading	Supplied from power source to load
Active energy reverse	kWh	± 2% of reading	Supplied from load to power source
Apparent energy	kVAh	± 2% of reading	Energy
Reactive energy received	kvarh	± 2% of reading	Reactive power in the 1st and 2nd quadrants
Reactive energy sent	kvarh	± 2% of reading	Reactive power in the 3rd and 4th quadrants
Reactive energy net	kvarh	± 2% of reading	kvarh sent - kvarh received
Reactive energy total	kvarh	± 2% of reading	kvarh sent + kvarh received

① Accuracy applies to 10% to 120% of In at 25 ° C (77 ° F).

② Accuracy applies to 34 to 690Vac voltage range at 25 ° C (77 ° F).

③ Only available on PXR25

④ In Firmware version 02.02 and higher, you can select the power factor calculator method as IEC, IEEE or Alternate IEEE in the ' Edit Settings ' menu.

Time-Current Curves

Refer to the Time-Current Curves (TCC) in PXR20/25 catalogues to set protection values. These protection values should be set to recommendations of professional engineers in charge of the equipment. Use the following link/path to access the Time-Current Curve on Eaton website: http://www.eaton.com/TCC

I Ordering - Basic Device I

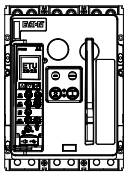

PDC5 K:50KA (Equipped as Standard with Motor Operator, Shunt Release, and Closing Release)

Electronic trip unit
Fixed mounting

Trip unit	Rated current	Trip unit protection	Trip unit's internal accessory	3P Part No.	Article No.
Breaking capacity K:50KA					
PXR20	0630	2:LSI	N: 3 Relays/ZSI/CAM	PDC53K0630E2NF	PDC520001
	0800	2:LSI	N: 3 Relays/ZSI/CAM	PDC53K0800E2NF	PDC520002
	1000	2:LSI	N: 3 Relays/ZSI/CAM	PDC53K1000E2NF	PDC520003
	1250	2:LSI	N: 3 Relays/ZSI/CAM	PDC53K1250E2NF	PDC520004
	1600	2:LSI	N: 3 Relays/ZSI/CAM	PDC53K1600E2NF	PDC520005
	0630	3:LISG	N: 3 Relays/ZSI/CAM	PDC53K0630E3NF	PDC520006
	0800	3:LISG	N: 3 Relays/ZSI/CAM	PDC53K0800E3NF	PDC520007
	1000	3:LISG	N: 3 Relays/ZSI/CAM	PDC53K1000E3NF	PDC520008
	1250	3:LISG	N: 3 Relays/ZSI/CAM	PDC53K1250E3NF	PDC520009
	1600	3:LISG	N: 3 Relays/ZSI/CAM	PDC53K1600E3NF	PDC520010
	0630	4:LSI ARMS	M: Modbus /3 Relays/ZSI/CAM	PDC53K0630E4MF	PDC520031
	0800	4:LSI ARMS	M: Modbus /3 Relays/ZSI/CAM	PDC53K0800E4MF	PDC520032
	1000	4:LSI ARMS	M: Modbus /3 Relays/ZSI/CAM	PDC53K1000E4MF	PDC520033
	1250	4:LSI ARMS	M: Modbus /3 Relays/ZSI/CAM	PDC53K1250E4MF	PDC520034
	1600	4:LSI ARMS	M: Modbus /3 Relays/ZSI/CAM	PDC53K1600E4MF	PDC520035
	0630	5:LSIGARMS	M: Modbus /3 Relays/ZSI/CAM	PDC53K0630E5MF	PDC520036
	0800	5:LSIGARMS	M: Modbus /3 Relays/ZSI/CAM	PDC53K0800E5MF	PDC520037
	1000	5:LSIGARMS	M: Modbus /3 Relays/ZSI/CAM	PDC53K1000E5MF	PDC520038
	1250	5:LSIGARMS	M: Modbus /3 Relays/ZSI/CAM	PDC53K1250E5MF	PDC520039
	1600	5:LSIGARMS	M: Modbus /3 Relays/ZSI/CAM	PDC53K1600E5MF	PDC520040
PXR25	0630	4:LSI ARMS	M: Modbus /3 Relays/ZSI/CAM	PDC53K0630P4MF	PDC520051
	0800	4:LSI ARMS	M: Modbus /3 Relays/ZSI/CAM	PDC53K0800P4MF	PDC520052
	1000	4:LSI ARMS	M: Modbus /3 Relays/ZSI/CAM	PDC53K1000P4MF	PDC520053
	1250	4:LSI ARMS	M: Modbus /3 Relays/ZSI/CAM	PDC53K1250P4MF	PDC520054
	1600	4:LSI ARMS	M: Modbus /3 Relays/ZSI/CAM	PDC53K1600P4MF	PDC520055
	0630	5:LSIGARMS	M: Modbus /3 Relays/ZSI/CAM	PDC53K0630P5MF	PDC520056
	0800	5:LSIGARMS	M: Modbus /3 Relays/ZSI/CAM	PDC53K0800P5MF	PDC520057
	1000	5:LSIGARMS	M: Modbus /3 Relays/ZSI/CAM	PDC53K1000P5MF	PDC520058
	1250	5:LSIGARMS	M: Modbus /3 Relays/ZSI/CAM	PDC53K1250P5MF	PDC520059
	1600	5:LSIGARMS	M: Modbus /3 Relays/ZSI/CAM	PDC53K1600P5MF	PDC520060

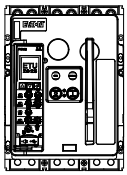

PDC5 K:50KA (Without Motor Operator, Shunt Release, and Closing Release)

Electronic trip unit
Fixed mounting

Trip unit	Rated current	Trip unit protection	Trip unit's internal accessory	3P Part No.	Article No.
Breaking capacity K:50KA					
PXR20	0630	2:LSI	N: 3 Relays/ZSI/CAM	PDC53K0630E2NF-S	PDC520001S
	0800	2:LSI	N: 3 Relays/ZSI/CAM	PDC53K0800E2NF-S	PDC520002S
	1000	2:LSI	N: 3 Relays/ZSI/CAM	PDC53K1000E2NF-S	PDC520003S
	1250	2:LSI	N: 3 Relays/ZSI/CAM	PDC53K1250E2NF-S	PDC520004S
	1600	2:LSI	N: 3 Relays/ZSI/CAM	PDC53K1600E2NF-S	PDC520005S
	0630	3:LISG	N: 3 Relays/ZSI/CAM	PDC53K0630E3NF-S	PDC520006S
	0800	3:LISG	N: 3 Relays/ZSI/CAM	PDC53K0800E3NF-S	PDC520007S
	1000	3:LISG	N: 3 Relays/ZSI/CAM	PDC53K1000E3NF-S	PDC520008S
	1250	3:LISG	N: 3 Relays/ZSI/CAM	PDC53K1250E3NF-S	PDC520009S
	1600	3:LISG	N: 3 Relays/ZSI/CAM	PDC53K1600E3NF-S	PDC520010S
	0630	4:LSI ARMS	M: Modbus /3 Relays/ZSI/CAM	PDC53K0630E4MF-S	PDC520031S
	0800	4:LSI ARMS	M: Modbus /3 Relays/ZSI/CAM	PDC53K0800E4MF-S	PDC520032S
	1000	4:LSI ARMS	M: Modbus /3 Relays/ZSI/CAM	PDC53K1000E4MF-S	PDC520033S
	1250	4:LSI ARMS	M: Modbus /3 Relays/ZSI/CAM	PDC53K1250E4MF-S	PDC520034S
	1600	4:LSI ARMS	M: Modbus /3 Relays/ZSI/CAM	PDC53K1600E4MF-S	PDC520035S
	0630	5:LSIGARMS	M: Modbus /3 Relays/ZSI/CAM	PDC53K0630E5MF-S	PDC520036S
	0800	5:LSIGARMS	M: Modbus /3 Relays/ZSI/CAM	PDC53K0800E5MF-S	PDC520037S
	1000	5:LSIGARMS	M: Modbus /3 Relays/ZSI/CAM	PDC53K1000E5MF-S	PDC520038S
	1250	5:LSIGARMS	M: Modbus /3 Relays/ZSI/CAM	PDC53K1250E5MF-S	PDC520039S
	1600	5:LSIGARMS	M: Modbus /3 Relays/ZSI/CAM	PDC53K1600E5MF-S	PDC520040S
PXR25	0630	4:LSI ARMS	M: Modbus /3 Relays/ZSI/CAM	PDC53K0630P4MF-S	PDC520051S
	0800	4:LSI ARMS	M: Modbus /3 Relays/ZSI/CAM	PDC53K0800P4MF-S	PDC520052S
	1000	4:LSI ARMS	M: Modbus /3 Relays/ZSI/CAM	PDC53K1000P4MF-S	PDC520053S
	1250	4:LSI ARMS	M: Modbus /3 Relays/ZSI/CAM	PDC53K1250P4MF-S	PDC520054S
	1600	4:LSI ARMS	M: Modbus /3 Relays/ZSI/CAM	PDC53K1600P4MF-S	PDC520055S
	0630	5:LSIGARMS	M: Modbus /3 Relays/ZSI/CAM	PDC53K0630P5MF-S	PDC520056S
	0800	5:LSIGARMS	M: Modbus /3 Relays/ZSI/CAM	PDC53K0800P5MF-S	PDC520057S
	1000	5:LSIGARMS	M: Modbus /3 Relays/ZSI/CAM	PDC53K1000P5MF-S	PDC520058S
	1250	5:LSIGARMS	M: Modbus /3 Relays/ZSI/CAM	PDC53K1250P5MF-S	PDC520059S
	1600	5:LSIGARMS	M: Modbus /3 Relays/ZSI/CAM	PDC53K1600P5MF-S	PDC520060S

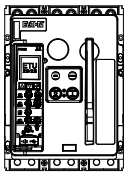

PDC5 K:50KA (Equipped as Standard with Motor Operator, Shunt Release and Closing Release)

Electronic trip unit
Fixed mounting

Trip unit	Rated current	Trip unit protection	Trip unit's internal accessory	4P Part No.	Article No.
Breaking capacity K:50KA					
PXR20	0630	2:LSI	N: 3 Relays/ZSI/CAM	PDC54K0630E2NF	PDC520181
	0800	2:LSI	N: 3 Relays/ZSI/CAM	PDC54K0800E2NF	PDC520182
	1000	2:LSI	N: 3 Relays/ZSI/CAM	PDC54K1000E2NF	PDC520183
	1250	2:LSI	N: 3 Relays/ZSI/CAM	PDC54K1250E2NF	PDC520184
	1600	2:LSI	N: 3 Relays/ZSI/CAM	PDC54K1600E2NF	PDC520185
	0630	3:LISG	N: 3 Relays/ZSI/CAM	PDC54K0630E3NF	PDC520186
	0800	3:LISG	N: 3 Relays/ZSI/CAM	PDC54K0800E3NF	PDC520187
	1000	3:LISG	N: 3 Relays/ZSI/CAM	PDC54K1000E3NF	PDC520188
	1250	3:LISG	N: 3 Relays/ZSI/CAM	PDC54K1250E3NF	PDC520189
	1600	3:LISG	N: 3 Relays/ZSI/CAM	PDC54K1600E3NF	PDC520190
	0630	4:LSI ARMS	M: Modbus /3 Relays/ZSI/CAM	PDC54K0630E4MF	PDC520211
	0800	4:LSI ARMS	M: Modbus /3 Relays/ZSI/CAM	PDC54K0800E4MF	PDC520212
	1000	4:LSI ARMS	M: Modbus /3 Relays/ZSI/CAM	PDC54K1000E4MF	PDC520213
	1250	4:LSI ARMS	M: Modbus /3 Relays/ZSI/CAM	PDC54K1250E4MF	PDC520214
	1600	4:LSI ARMS	M: Modbus /3 Relays/ZSI/CAM	PDC54K1600E4MF	PDC520215
	0630	5:LSIGARMS	M: Modbus /3 Relays/ZSI/CAM	PDC54K0630E5MF	PDC520216
	0800	5:LSIGARMS	M: Modbus /3 Relays/ZSI/CAM	PDC54K0800E5MF	PDC520217
	1000	5:LSIGARMS	M: Modbus /3 Relays/ZSI/CAM	PDC54K1000E5MF	PDC520218
	1250	5:LSIGARMS	M: Modbus /3 Relays/ZSI/CAM	PDC54K1250E5MF	PDC520219
	1600	5:LSIGARMS	M: Modbus /3 Relays/ZSI/CAM	PDC54K1600E5MF	PDC520220
PXR25	0630	4:LSI ARMS	M: Modbus /3 Relays/ZSI/CAM	PDC54K0630P4MF	PDC520231
	0800	4:LSI ARMS	M: Modbus /3 Relays/ZSI/CAM	PDC54K0800P4MF	PDC520232
	1000	4:LSI ARMS	M: Modbus /3 Relays/ZSI/CAM	PDC54K1000P4MF	PDC520233
	1250	4:LSI ARMS	M: Modbus /3 Relays/ZSI/CAM	PDC54K1250P4MF	PDC520234
	1600	4:LSI ARMS	M: Modbus /3 Relays/ZSI/CAM	PDC54K1600P4MF	PDC520235
	0630	5:LSIGARMS	M: Modbus /3 Relays/ZSI/CAM	PDC54K0630P5MF	PDC520236
	0800	5:LSIGARMS	M: Modbus /3 Relays/ZSI/CAM	PDC54K0800P5MF	PDC520237
	1000	5:LSIGARMS	M: Modbus /3 Relays/ZSI/CAM	PDC54K1000P5MF	PDC520238
	1250	5:LSIGARMS	M: Modbus /3 Relays/ZSI/CAM	PDC54K1250P5MF	PDC520239
	1600	5:LSIGARMS	M: Modbus /3 Relays/ZSI/CAM	PDC54K1600P5MF	PDC520240

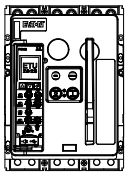

PDC5 K:50KA (Without Motor Operator, Shunt Release and Closing Release)

Electronic trip unit
Fixed mounting

Trip unit	Rated current	Trip unit protection	Trip unit's internal accessory	4P Part No.	Article No.
Breaking capacity K:50KA					
PXR20	0630	2:LSI	N: 3 Relays/ZSI/CAM	PDC54K0630E2NF-S	PDC520181S
	0800	2:LSI	N: 3 Relays/ZSI/CAM	PDC54K0800E2NF-S	PDC520182S
	1000	2:LSI	N: 3 Relays/ZSI/CAM	PDC54K1000E2NF-S	PDC520183S
	1250	2:LSI	N: 3 Relays/ZSI/CAM	PDC54K1250E2NF-S	PDC520184S
	1600	2:LSI	N: 3 Relays/ZSI/CAM	PDC54K1600E2NF-S	PDC520185S
	0630	3:LISG	N: 3 Relays/ZSI/CAM	PDC54K0630E3NF-S	PDC520186S
	0800	3:LISG	N: 3 Relays/ZSI/CAM	PDC54K0800E3NF-S	PDC520187S
	1000	3:LISG	N: 3 Relays/ZSI/CAM	PDC54K1000E3NF-S	PDC520188S
	1250	3:LISG	N: 3 Relays/ZSI/CAM	PDC54K1250E3NF-S	PDC520189S
	1600	3:LISG	N: 3 Relays/ZSI/CAM	PDC54K1600E3NF-S	PDC520190S
	0630	4:LSI ARMS	M: Modbus /3 Relays/ZSI/CAM	PDC54K0630E4MF-S	PDC520211S
	0800	4:LSI ARMS	M: Modbus /3 Relays/ZSI/CAM	PDC54K0800E4MF-S	PDC520212S
	1000	4:LSI ARMS	M: Modbus /3 Relays/ZSI/CAM	PDC54K1000E4MF-S	PDC520213S
	1250	4:LSI ARMS	M: Modbus /3 Relays/ZSI/CAM	PDC54K1250E4MF-S	PDC520214S
	1600	4:LSI ARMS	M: Modbus /3 Relays/ZSI/CAM	PDC54K1600E4MF-S	PDC520215S
	0630	5:LSIGARMS	M: Modbus /3 Relays/ZSI/CAM	PDC54K0630E5MF-S	PDC520216S
	0800	5:LSIGARMS	M: Modbus /3 Relays/ZSI/CAM	PDC54K0800E5MF-S	PDC520217S
	1000	5:LSIGARMS	M: Modbus /3 Relays/ZSI/CAM	PDC54K1000E5MF-S	PDC520218S
	1250	5:LSIGARMS	M: Modbus /3 Relays/ZSI/CAM	PDC54K1250E5MF-S	PDC520219S
	1600	5:LSIGARMS	M: Modbus /3 Relays/ZSI/CAM	PDC54K1600E5MF-S	PDC520220S
PXR25	0630	4:LSI ARMS	M: Modbus /3 Relays/ZSI/CAM	PDC54K0630P4MF-S	PDC520231S
	0800	4:LSI ARMS	M: Modbus /3 Relays/ZSI/CAM	PDC54K0800P4MF-S	PDC520232S
	1000	4:LSI ARMS	M: Modbus /3 Relays/ZSI/CAM	PDC54K1000P4MF-S	PDC520233S
	1250	4:LSI ARMS	M: Modbus /3 Relays/ZSI/CAM	PDC54K1250P4MF-S	PDC520234S
	1600	4:LSI ARMS	M: Modbus /3 Relays/ZSI/CAM	PDC54K1600P4MF-S	PDC520235S
	0630	5:LSIGARMS	M: Modbus /3 Relays/ZSI/CAM	PDC54K0630P5MF-S	PDC520236S
	0800	5:LSIGARMS	M: Modbus /3 Relays/ZSI/CAM	PDC54K0800P5MF-S	PDC520237S
	1000	5:LSIGARMS	M: Modbus /3 Relays/ZSI/CAM	PDC54K1000P5MF-S	PDC520238S
	1250	5:LSIGARMS	M: Modbus /3 Relays/ZSI/CAM	PDC54K1250P5MF-S	PDC520239S
	1600	5:LSIGARMS	M: Modbus /3 Relays/ZSI/CAM	PDC54K1600P5MF-S	PDC520240S

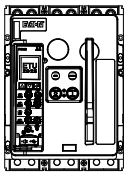

PDC5 P:85KA (Equipped as Standard with Motor Operator, Shunt Release and Closing Release)

Electronic trip unit
Fixed mounting

Trip unit	Rated current	Trip unit protection	Trip unit's internal accessory	3P Part No.	3P Article No.
Breaking capacity P:85KA					
PXR20	0630	2:LSI	N: 3 Relays/ZSI/CAM	PDC53P0630E2NF	PDC520061
	0800	2:LSI	N: 3 Relays/ZSI/CAM	PDC53P0800E2NF	PDC520062
	1000	2:LSI	N: 3 Relays/ZSI/CAM	PDC53P1000E2NF	PDC520063
	1250	2:LSI	N: 3 Relays/ZSI/CAM	PDC53P1250E2NF	PDC520064
	1600	2:LSI	N: 3 Relays/ZSI/CAM	PDC53P1600E2NF	PDC520065
	0630	3:LISG	N: 3 Relays/ZSI/CAM	PDC53P0630E3NF	PDC520066
	0800	3:LISG	N: 3 Relays/ZSI/CAM	PDC53P0800E3NF	PDC520067
	1000	3:LISG	N: 3 Relays/ZSI/CAM	PDC53P1000E3NF	PDC520068
	1250	3:LISG	N: 3 Relays/ZSI/CAM	PDC53P1250E3NF	PDC520069
	1600	3:LISG	N: 3 Relays/ZSI/CAM	PDC53P1600E3NF	PDC520070
	0630	4:LSI ARMS	M: Modbus /3 Relays/ZSI/CAM	PDC53P0630E4MF	PDC520091
	0800	4:LSI ARMS	M: Modbus /3 Relays/ZSI/CAM	PDC53P0800E4MF	PDC520092
	1000	4:LSI ARMS	M: Modbus /3 Relays/ZSI/CAM	PDC53P1000E4MF	PDC520093
	1250	4:LSI ARMS	M: Modbus /3 Relays/ZSI/CAM	PDC53P1250E4MF	PDC520094
	1600	4:LSI ARMS	M: Modbus /3 Relays/ZSI/CAM	PDC53P1600E4MF	PDC520095
	0630	5:LSIGARMS	M: Modbus /3 Relays/ZSI/CAM	PDC53P0630E5MF	PDC520096
	0800	5:LSIGARMS	M: Modbus /3 Relays/ZSI/CAM	PDC53P0800E5MF	PDC520097
	1000	5:LSIGARMS	M: Modbus /3 Relays/ZSI/CAM	PDC53P1000E5MF	PDC520098
	1250	5:LSIGARMS	M: Modbus /3 Relays/ZSI/CAM	PDC53P1250E5MF	PDC520099
	1600	5:LSIGARMS	M: Modbus /3 Relays/ZSI/CAM	PDC53P1600E5MF	PDC520100
PXR25	0630	4:LSI ARMS	M: Modbus /3 Relays/ZSI/CAM	PDC53P0630P4MF	PDC520111
	0800	4:LSI ARMS	M: Modbus /3 Relays/ZSI/CAM	PDC53P0800P4MF	PDC520112
	1000	4:LSI ARMS	M: Modbus /3 Relays/ZSI/CAM	PDC53P1000P4MF	PDC520113
	1250	4:LSI ARMS	M: Modbus /3 Relays/ZSI/CAM	PDC53P1250P4MF	PDC520114
	1600	4:LSI ARMS	M: Modbus /3 Relays/ZSI/CAM	PDC53P1600P4MF	PDC520115
	0630	5:LSIGARMS	M: Modbus /3 Relays/ZSI/CAM	PDC53P0630P5MF	PDC520116
	0800	5:LSIGARMS	M: Modbus /3 Relays/ZSI/CAM	PDC53P0800P5MF	PDC520117
	1000	5:LSIGARMS	M: Modbus /3 Relays/ZSI/CAM	PDC53P1000P5MF	PDC520118
	1250	5:LSIGARMS	M: Modbus /3 Relays/ZSI/CAM	PDC53P1250P5MF	PDC520119
	1600	5:LSIGARMS	M: Modbus /3 Relays/ZSI/CAM	PDC53P1600P5MF	PDC520120

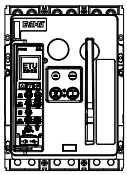

PDC5 P:85KA (Without Motor Operator, Shunt Release and Closing Release)

Electronic trip unit
Fixed mounting

Trip unit	Rated current	Trip unit protection	Trip unit's internal accessory	3P Part No.	Article No.
Breaking capacity P:85KA					
PXR20	0630	2:LSI	N: 3 Relays/ZSI/CAM	PDC53P0630E2NF-S	PDC520061S
	0800	2:LSI	N: 3 Relays/ZSI/CAM	PDC53P0800E2NF-S	PDC520062S
	1000	2:LSI	N: 3 Relays/ZSI/CAM	PDC53P1000E2NF-S	PDC520063S
	1250	2:LSI	N: 3 Relays/ZSI/CAM	PDC53P1250E2NF-S	PDC520064S
	1600	2:LSI	N: 3 Relays/ZSI/CAM	PDC53P1600E2NF-S	PDC520065S
	0630	3:LISG	N: 3 Relays/ZSI/CAM	PDC53P0630E3NF-S	PDC520066S
	0800	3:LISG	N: 3 Relays/ZSI/CAM	PDC53P0800E3NF-S	PDC520067S
	1000	3:LISG	N: 3 Relays/ZSI/CAM	PDC53P1000E3NF-S	PDC520068S
	1250	3:LISG	N: 3 Relays/ZSI/CAM	PDC53P1250E3NF-S	PDC520069S
	1600	3:LISG	N: 3 Relays/ZSI/CAM	PDC53P1600E3NF-S	PDC520070S
	0630	4:LSI ARMS	M: Modbus /3 Relays/ZSI/CAM	PDC53P0630E4MF-S	PDC520091S
	0800	4:LSI ARMS	M: Modbus /3 Relays/ZSI/CAM	PDC53P0800E4MF-S	PDC520092S
	1000	4:LSI ARMS	M: Modbus /3 Relays/ZSI/CAM	PDC53P1000E4MF-S	PDC520093S
	1250	4:LSI ARMS	M: Modbus /3 Relays/ZSI/CAM	PDC53P1250E4MF-S	PDC520094S
	1600	4:LSI ARMS	M: Modbus /3 Relays/ZSI/CAM	PDC53P1600E4MF-S	PDC520095S
	0630	5:LSIGARMS	M: Modbus /3 Relays/ZSI/CAM	PDC53P0630E5MF-S	PDC520096S
	0800	5:LSIGARMS	M: Modbus /3 Relays/ZSI/CAM	PDC53P0800E5MF-S	PDC520097S
	1000	5:LSIGARMS	M: Modbus /3 Relays/ZSI/CAM	PDC53P1000E5MF-S	PDC520098S
	1250	5:LSIGARMS	M: Modbus /3 Relays/ZSI/CAM	PDC53P1250E5MF-S	PDC520099S
	1600	5:LSIGARMS	M: Modbus /3 Relays/ZSI/CAM	PDC53P1600E5MF-S	PDC520100S
PXR25	0630	4:LSI ARMS	M: Modbus /3 Relays/ZSI/CAM	PDC53P0630P4MF-S	PDC520111S
	0800	4:LSI ARMS	M: Modbus /3 Relays/ZSI/CAM	PDC53P0800P4MF-S	PDC520112S
	1000	4:LSI ARMS	M: Modbus /3 Relays/ZSI/CAM	PDC53P1000P4MF-S	PDC520113S
	1250	4:LSI ARMS	M: Modbus /3 Relays/ZSI/CAM	PDC53P1250P4MF-S	PDC520114S
	1600	4:LSI ARMS	M: Modbus /3 Relays/ZSI/CAM	PDC53P1600P4MF-S	PDC520115S
	0630	5:LSIGARMS	M: Modbus /3 Relays/ZSI/CAM	PDC53P0630P5MF-S	PDC520116S
	0800	5:LSIGARMS	M: Modbus /3 Relays/ZSI/CAM	PDC53P0800P5MF-S	PDC520117S
	1000	5:LSIGARMS	M: Modbus /3 Relays/ZSI/CAM	PDC53P1000P5MF-S	PDC520118S
	1250	5:LSIGARMS	M: Modbus /3 Relays/ZSI/CAM	PDC53P1250P5MF-S	PDC520119S
	1600	5:LSIGARMS	M: Modbus /3 Relays/ZSI/CAM	PDC53P1600P5MF-S	PDC520120S

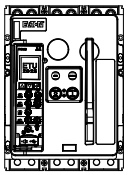

PDC5 P:85KA (Equipped as Standard with Motor Operator, Shunt Release and Closing Release)

Electronic trip unit
Fixed mounting

Trip unit	Rated current	Trip unit protection	Trip unit's internal accessory	4P Part No.	4P Article No.
Breaking capacity P:85KA					
PXR20	0630	2:LSI	N: 3 Relays/ZSI/CAM	PDC54P0630E2NF	PDC520241
	0800	2:LSI	N: 3 Relays/ZSI/CAM	PDC54P0800E2NF	PDC520242
	1000	2:LSI	N: 3 Relays/ZSI/CAM	PDC54P1000E2NF	PDC520243
	1250	2:LSI	N: 3 Relays/ZSI/CAM	PDC54P1250E2NF	PDC520244
	1600	2:LSI	N: 3 Relays/ZSI/CAM	PDC54P1600E2NF	PDC520245
	0630	3:LISG	N: 3 Relays/ZSI/CAM	PDC54P0630E3NF	PDC520246
	0800	3:LISG	N: 3 Relays/ZSI/CAM	PDC54P0800E3NF	PDC520247
	1000	3:LISG	N: 3 Relays/ZSI/CAM	PDC54P1000E3NF	PDC520248
	1250	3:LISG	N: 3 Relays/ZSI/CAM	PDC54P1250E3NF	PDC520249
	1600	3:LISG	N: 3 Relays/ZSI/CAM	PDC54P1600E3NF	PDC520250
	0630	4:LSI ARMS	M: Modbus /3 Relays/ZSI/CAM	PDC54P0630E4MF	PDC520271
	0800	4:LSI ARMS	M: Modbus /3 Relays/ZSI/CAM	PDC54P0800E4MF	PDC520272
	1000	4:LSI ARMS	M: Modbus /3 Relays/ZSI/CAM	PDC54P1000E4MF	PDC520273
	1250	4:LSI ARMS	M: Modbus /3 Relays/ZSI/CAM	PDC54P1250E4MF	PDC520274
	1600	4:LSI ARMS	M: Modbus /3 Relays/ZSI/CAM	PDC54P1600E4MF	PDC520275
	0630	5:LSIGARMS	M: Modbus /3 Relays/ZSI/CAM	PDC54P0630E5MF	PDC520276
	0800	5:LSIGARMS	M: Modbus /3 Relays/ZSI/CAM	PDC54P0800E5MF	PDC520277
	1000	5:LSIGARMS	M: Modbus /3 Relays/ZSI/CAM	PDC54P1000E5MF	PDC520278
	1250	5:LSIGARMS	M: Modbus /3 Relays/ZSI/CAM	PDC54P1250E5MF	PDC520279
	1600	5:LSIGARMS	M: Modbus /3 Relays/ZSI/CAM	PDC54P1600E5MF	PDC520280
PXR25	0630	4:LSI ARMS	M: Modbus /3 Relays/ZSI/CAM	PDC54P0630P4MF	PDC520291
	0800	4:LSI ARMS	M: Modbus /3 Relays/ZSI/CAM	PDC54P0800P4MF	PDC520292
	1000	4:LSI ARMS	M: Modbus /3 Relays/ZSI/CAM	PDC54P1000P4MF	PDC520293
	1250	4:LSI ARMS	M: Modbus /3 Relays/ZSI/CAM	PDC54P1250P4MF	PDC520294
	1600	4:LSI ARMS	M: Modbus /3 Relays/ZSI/CAM	PDC54P1600P4MF	PDC520295
	0630	5:LSIGARMS	M: Modbus /3 Relays/ZSI/CAM	PDC54P0630P5MF	PDC520296
	0800	5:LSIGARMS	M: Modbus /3 Relays/ZSI/CAM	PDC54P0800P5MF	PDC520297
	1000	5:LSIGARMS	M: Modbus /3 Relays/ZSI/CAM	PDC54P1000P5MF	PDC520298
	1250	5:LSIGARMS	M: Modbus /3 Relays/ZSI/CAM	PDC54P1250P5MF	PDC520299
	1600	5:LSIGARMS	M: Modbus /3 Relays/ZSI/CAM	PDC54P1600P5MF	PDC520300

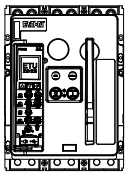

PDC5 P:85KA (Without Motor Operator, Shunt Release and Closing Release)

Electronic trip unit
Fixed mounting

Trip unit	Rated current	Trip unit protection	Trip unit's internal accessory	4P Part No.	Article No.
Breaking capacity P:85KA					
PXR20	0630	2:LSI	N: 3 Relays/ZSI/CAM	PDC54P0630E2NF-S	PDC520241S
	0800	2:LSI	N: 3 Relays/ZSI/CAM	PDC54P0800E2NF-S	PDC520242S
	1000	2:LSI	N: 3 Relays/ZSI/CAM	PDC54P1000E2NF-S	PDC520243S
	1250	2:LSI	N: 3 Relays/ZSI/CAM	PDC54P1250E2NF-S	PDC520244S
	1600	2:LSI	N: 3 Relays/ZSI/CAM	PDC54P1600E2NF-S	PDC520245S
	0630	3:LISG	N: 3 Relays/ZSI/CAM	PDC54P0630E3NF-S	PDC520246S
	0800	3:LISG	N: 3 Relays/ZSI/CAM	PDC54P0800E3NF-S	PDC520247S
	1000	3:LISG	N: 3 Relays/ZSI/CAM	PDC54P1000E3NF-S	PDC520248S
	1250	3:LISG	N: 3 Relays/ZSI/CAM	PDC54P1250E3NF-S	PDC520249S
	1600	3:LISG	N: 3 Relays/ZSI/CAM	PDC54P1600E3NF-S	PDC520250S
	0630	4:LSI ARMS	M: Modbus /3 Relays/ZSI/CAM	PDC54P0630E4MF-S	PDC520271S
	0800	4:LSI ARMS	M: Modbus /3 Relays/ZSI/CAM	PDC54P0800E4MF-S	PDC520272S
	1000	4:LSI ARMS	M: Modbus /3 Relays/ZSI/CAM	PDC54P1000E4MF-S	PDC520273S
	1250	4:LSI ARMS	M: Modbus /3 Relays/ZSI/CAM	PDC54P1250E4MF-S	PDC520274S
	1600	4:LSI ARMS	M: Modbus /3 Relays/ZSI/CAM	PDC54P1600E4MF-S	PDC520275S
	0630	5:LSIGARMS	M: Modbus /3 Relays/ZSI/CAM	PDC54P0630E5MF-S	PDC520276S
	0800	5:LSIGARMS	M: Modbus /3 Relays/ZSI/CAM	PDC54P0800E5MF-S	PDC520277S
	1000	5:LSIGARMS	M: Modbus /3 Relays/ZSI/CAM	PDC54P1000E5MF-S	PDC520278S
	1250	5:LSIGARMS	M: Modbus /3 Relays/ZSI/CAM	PDC54P1250E5MF-S	PDC520279S
	1600	5:LSIGARMS	M: Modbus /3 Relays/ZSI/CAM	PDC54P1600E5MF-S	PDC520280S
PXR25	0630	4:LSI ARMS	M: Modbus /3 Relays/ZSI/CAM	PDC54P0630P4MF-S	PDC520291S
	0800	4:LSI ARMS	M: Modbus /3 Relays/ZSI/CAM	PDC54P0800P4MF-S	PDC520292S
	1000	4:LSI ARMS	M: Modbus /3 Relays/ZSI/CAM	PDC54P1000P4MF-S	PDC520293S
	1250	4:LSI ARMS	M: Modbus /3 Relays/ZSI/CAM	PDC54P1250P4MF-S	PDC520294S
	1600	4:LSI ARMS	M: Modbus /3 Relays/ZSI/CAM	PDC54P1600P4MF-S	PDC520295S
	0630	5:LSIGARMS	M: Modbus /3 Relays/ZSI/CAM	PDC54P0630P5MF-S	PDC520296S
	0800	5:LSIGARMS	M: Modbus /3 Relays/ZSI/CAM	PDC54P0800P5MF-S	PDC520297S
	1000	5:LSIGARMS	M: Modbus /3 Relays/ZSI/CAM	PDC54P1000P5MF-S	PDC520298S
	1250	5:LSIGARMS	M: Modbus /3 Relays/ZSI/CAM	PDC54P1250P5MF-S	PDC520299S
	1600	5:LSIGARMS	M: Modbus /3 Relays/ZSI/CAM	PDC54P1600P5MF-S	PDC520300S

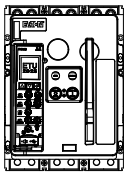

PDC5 H:100KA (Equipped as Standard with Motor Operator, Shunt Release and Closing Release)

Electronic trip unit
Fixed mounting

Trip unit	Rated current	Trip unit protection	Trip unit's internal accessory	3P Part No.	3P Article No.
Breaking capacity H:100KA					
PXR20	0630	2:LSI	N: 3 Relays/ZSI/CAM	PDC53H0630E2NF	PDC520121
	0800	2:LSI	N: 3 Relays/ZSI/CAM	PDC53H0800E2NF	PDC520122
	1000	2:LSI	N: 3 Relays/ZSI/CAM	PDC53H1000E2NF	PDC520123
	1250	2:LSI	N: 3 Relays/ZSI/CAM	PDC53H1250E2NF	PDC520124
	1600	2:LSI	N: 3 Relays/ZSI/CAM	PDC53H1600E2NF	PDC520125
	0630	3:LISG	N: 3 Relays/ZSI/CAM	PDC53H0630E3NF	PDC520126
	0800	3:LISG	N: 3 Relays/ZSI/CAM	PDC53H0800E3NF	PDC520127
	1000	3:LISG	N: 3 Relays/ZSI/CAM	PDC53H1000E3NF	PDC520128
	1250	3:LISG	N: 3 Relays/ZSI/CAM	PDC53H1250E3NF	PDC520129
	1600	3:LISG	N: 3 Relays/ZSI/CAM	PDC53H1600E3NF	PDC520130
	0630	4:LSI ARMS	M: Modbus /3 Relays/ZSI/CAM	PDC53H0630E4MF	PDC520151
	0800	4:LSI ARMS	M: Modbus /3 Relays/ZSI/CAM	PDC53H0800E4MF	PDC520152
	1000	4:LSI ARMS	M: Modbus /3 Relays/ZSI/CAM	PDC53H1000E4MF	PDC520153
	1250	4:LSI ARMS	M: Modbus /3 Relays/ZSI/CAM	PDC53H1250E4MF	PDC520154
	1600	4:LSI ARMS	M: Modbus /3 Relays/ZSI/CAM	PDC53H1600E4MF	PDC520155
	0630	5:LSIGARMS	M: Modbus /3 Relays/ZSI/CAM	PDC53H0630E5MF	PDC520156
	0800	5:LSIGARMS	M: Modbus /3 Relays/ZSI/CAM	PDC53H0800E5MF	PDC520157
	1000	5:LSIGARMS	M: Modbus /3 Relays/ZSI/CAM	PDC53H1000E5MF	PDC520158
	1250	5:LSIGARMS	M: Modbus /3 Relays/ZSI/CAM	PDC53H1250E5MF	PDC520159
	1600	5:LSIGARMS	M: Modbus /3 Relays/ZSI/CAM	PDC53H1600E5MF	PDC520160
PXR25	0630	4:LSI ARMS	M: Modbus /3 Relays/ZSI/CAM	PDC53H0630P4MF	PDC520171
	0800	4:LSI ARMS	M: Modbus /3 Relays/ZSI/CAM	PDC53H0800P4MF	PDC520172
	1000	4:LSI ARMS	M: Modbus /3 Relays/ZSI/CAM	PDC53H1000P4MF	PDC520173
	1250	4:LSI ARMS	M: Modbus /3 Relays/ZSI/CAM	PDC53H1250P4MF	PDC520174
	1600	4:LSI ARMS	M: Modbus /3 Relays/ZSI/CAM	PDC53H1600P4MF	PDC520175
	0630	5:LSIGARMS	M: Modbus /3 Relays/ZSI/CAM	PDC53H0630P5MF	PDC520176
	0800	5:LSIGARMS	M: Modbus /3 Relays/ZSI/CAM	PDC53H0800P5MF	PDC520177
	1000	5:LSIGARMS	M: Modbus /3 Relays/ZSI/CAM	PDC53H1000P5MF	PDC520178
	1250	5:LSIGARMS	M: Modbus /3 Relays/ZSI/CAM	PDC53H1250P5MF	PDC520179
	1600	5:LSIGARMS	M: Modbus /3 Relays/ZSI/CAM	PDC53H1600P5MF	PDC520180

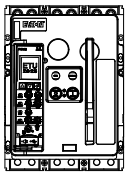

PDC5 H:100KA (Without Motor Operator, Shunt Release and Closing Release)

Electronic trip unit
Fixed mounting

Trip unit	Rated current	Trip unit protection	Trip unit's internal accessory	3P Part No.	Article No.
Breaking capacity H:100KA					
PXR20	0630	2:LSI	N: 3 Relays/ZSI/CAM	PDC53H0630E2NF-S	PDC520121S
	0800	2:LSI	N: 3 Relays/ZSI/CAM	PDC53H0800E2NF-S	PDC520122S
	1000	2:LSI	N: 3 Relays/ZSI/CAM	PDC53H1000E2NF-S	PDC520123S
	1250	2:LSI	N: 3 Relays/ZSI/CAM	PDC53H1250E2NF-S	PDC520124S
	1600	2:LSI	N: 3 Relays/ZSI/CAM	PDC53H1600E2NF-S	PDC520125S
	0630	3:LISG	N: 3 Relays/ZSI/CAM	PDC53H0630E3NF-S	PDC520126S
	0800	3:LISG	N: 3 Relays/ZSI/CAM	PDC53H0800E3NF-S	PDC520127S
	1000	3:LISG	N: 3 Relays/ZSI/CAM	PDC53H1000E3NF-S	PDC520128S
	1250	3:LISG	N: 3 Relays/ZSI/CAM	PDC53H1250E3NF-S	PDC520129S
	1600	3:LISG	N: 3 Relays/ZSI/CAM	PDC53H1600E3NF-S	PDC520130S
	0630	4:LSI ARMS	M: Modbus /3 Relays/ZSI/CAM	PDC53H0630E4MF-S	PDC520151S
	0800	4:LSI ARMS	M: Modbus /3 Relays/ZSI/CAM	PDC53H0800E4MF-S	PDC520152S
	1000	4:LSI ARMS	M: Modbus /3 Relays/ZSI/CAM	PDC53H1000E4MF-S	PDC520153S
	1250	4:LSI ARMS	M: Modbus /3 Relays/ZSI/CAM	PDC53H1250E4MF-S	PDC520154S
	1600	4:LSI ARMS	M: Modbus /3 Relays/ZSI/CAM	PDC53H1600E4MF-S	PDC520155S
	0630	5:LSIGARMS	M: Modbus /3 Relays/ZSI/CAM	PDC53H0630E5MF-S	PDC520156S
	0800	5:LSIGARMS	M: Modbus /3 Relays/ZSI/CAM	PDC53H0800E5MF-S	PDC520157S
	1000	5:LSIGARMS	M: Modbus /3 Relays/ZSI/CAM	PDC53H1000E5MF-S	PDC520158S
	1250	5:LSIGARMS	M: Modbus /3 Relays/ZSI/CAM	PDC53H1250E5MF-S	PDC520159S
	1600	5:LSIGARMS	M: Modbus /3 Relays/ZSI/CAM	PDC53H1600E5MF-S	PDC520160S
PXR25	0630	4:LSI ARMS	M: Modbus /3 Relays/ZSI/CAM	PDC53H0630P4MF-S	PDC520171S
	0800	4:LSI ARMS	M: Modbus /3 Relays/ZSI/CAM	PDC53H0800P4MF-S	PDC520172S
	1000	4:LSI ARMS	M: Modbus /3 Relays/ZSI/CAM	PDC53H1000P4MF-S	PDC520173S
	1250	4:LSI ARMS	M: Modbus /3 Relays/ZSI/CAM	PDC53H1250P4MF-S	PDC520174S
	1600	4:LSI ARMS	M: Modbus /3 Relays/ZSI/CAM	PDC53H1600P4MF-S	PDC520175S
	0630	5:LSIGARMS	M: Modbus /3 Relays/ZSI/CAM	PDC53H0630P5MF-S	PDC520176S
	0800	5:LSIGARMS	M: Modbus /3 Relays/ZSI/CAM	PDC53H0800P5MF-S	PDC520177S
	1000	5:LSIGARMS	M: Modbus /3 Relays/ZSI/CAM	PDC53H1000P5MF-S	PDC520178S
	1250	5:LSIGARMS	M: Modbus /3 Relays/ZSI/CAM	PDC53H1250P5MF-S	PDC520179S
	1600	5:LSIGARMS	M: Modbus /3 Relays/ZSI/CAM	PDC53H1600P5MF-S	PDC520180S

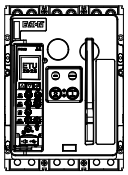

PDC5 H:100KA (Equipped as Standard with Motor Operator, Shunt Release and Closing Release)

Electronic trip unit
Fixed mounting

Trip unit	Rated current	Trip unit protection	Trip unit's internal accessory	4P Part No.	Article No.
Breaking capacity H:100KA					
PXR20	0630	2:LSI	N: 3 Relays/ZSI/CAM	PDC54H0630E2NF	PDC520301
	0800	2:LSI	N: 3 Relays/ZSI/CAM	PDC54H0800E2NF	PDC520302
	1000	2:LSI	N: 3 Relays/ZSI/CAM	PDC54H1000E2NF	PDC520303
	1250	3:LISG	N: 3 Relays/ZSI/CAM	PDC54H1250E2NF	PDC520304
	1600	3:LISG	N: 3 Relays/ZSI/CAM	PDC54H1600E2NF	PDC520305
	0630	3:LISG	N: 3 Relays/ZSI/CAM	PDC54H0630E3NF	PDC520306
	0800	3:LISG	N: 3 Relays/ZSI/CAM	PDC54H0800E3NF	PDC520307
	1000	3:LISG	N: 3 Relays/ZSI/CAM	PDC54H1000E3NF	PDC520308
	1250	4:LSI ARMS	N: 3 Relays/ZSI/CAM	PDC54H1250E3NF	PDC520309
	1600	4:LSI ARMS	N: 3 Relays/ZSI/CAM	PDC54H1600E3NF	PDC520310
	0630	4:LSI ARMS	M: Modbus /3 Relays/ZSI/CAM	PDC54H0630E4MF	PDC520331
	0800	4:LSI ARMS	M: Modbus /3 Relays/ZSI/CAM	PDC54H0800E4MF	PDC520332
	1000	4:LSI ARMS	M: Modbus /3 Relays/ZSI/CAM	PDC54H1000E4MF	PDC520333
	1250	5:LSIGARMS	M: Modbus /3 Relays/ZSI/CAM	PDC54H1250E4MF	PDC520334
	1600	5:LSIGARMS	M: Modbus /3 Relays/ZSI/CAM	PDC54H1600E4MF	PDC520335
	0630	5:LSIGARMS	M: Modbus /3 Relays/ZSI/CAM	PDC54H0630E5MF	PDC520336
	0800	5:LSIGARMS	M: Modbus /3 Relays/ZSI/CAM	PDC54H0800E5MF	PDC520337
	1000	5:LSIGARMS	M: Modbus /3 Relays/ZSI/CAM	PDC54H1000E5MF	PDC520338
	1250	4:LSI ARMS	M: Modbus /3 Relays/ZSI/CAM	PDC54H1250E5MF	PDC520339
	1600	4:LSI ARMS	M: Modbus /3 Relays/ZSI/CAM	PDC54H1600E5MF	PDC520340
PXR25	0630	4:LSI ARMS	M: Modbus /3 Relays/ZSI/CAM	PDC54H0630P4MF	PDC520351
	0800	4:LSI ARMS	M: Modbus /3 Relays/ZSI/CAM	PDC54H0800P4MF	PDC520352
	1000	4:LSI ARMS	M: Modbus /3 Relays/ZSI/CAM	PDC54H1000P4MF	PDC520353
	1250	5:LSIGARMS	M: Modbus /3 Relays/ZSI/CAM	PDC54H1250P4MF	PDC520354
	1600	5:LSIGARMS	M: Modbus /3 Relays/ZSI/CAM	PDC54H1600P4MF	PDC520355
	0630	5:LSIGARMS	M: Modbus /3 Relays/ZSI/CAM	PDC54H0630P5MF	PDC520356
	0800	5:LSIGARMS	M: Modbus /3 Relays/ZSI/CAM	PDC54H0800P5MF	PDC520357
	1000	5:LSIGARMS	M: Modbus /3 Relays/ZSI/CAM	PDC54H1000P5MF	PDC520358
	1250	5:LSIGARMS	M: Modbus /3 Relays/ZSI/CAM	PDC54H1250P5MF	PDC520359
	1600	5:LSIGARMS	M: Modbus /3 Relays/ZSI/CAM	PDC54H1600P5MF	PDC520360

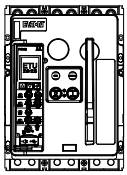

PDC5 H:100KA (Without Motor Operator, Shunt Release and Closing Release)

Electronic trip unit
Fixed mounting

Trip unit	Rated current	Trip unit protection	Trip unit's internal accessory	4P Part No.	Article No.
Breaking capacity H:100KA					
PXR20	0630	2:LSI	N: 3 Relays/ZSI/CAM	PDC54H0630E2NF-S	PDC520301S
	0800	2:LSI	N: 3 Relays/ZSI/CAM	PDC54H0800E2NF-S	PDC520302S
	1000	2:LSI	N: 3 Relays/ZSI/CAM	PDC54H1000E2NF-S	PDC520303S
	1250	3:LISG	N: 3 Relays/ZSI/CAM	PDC54H1250E2NF-S	PDC520304S
	1600	3:LISG	N: 3 Relays/ZSI/CAM	PDC54H1600E2NF-S	PDC520305S
	0630	3:LISG	N: 3 Relays/ZSI/CAM	PDC54H0630E3NF-S	PDC520306S
	0800	3:LISG	N: 3 Relays/ZSI/CAM	PDC54H0800E3NF-S	PDC520307S
	1000	3:LISG	N: 3 Relays/ZSI/CAM	PDC54H1000E3NF-S	PDC520308S
	1250	4:LSI ARMS	N: 3 Relays/ZSI/CAM	PDC54H1250E3NF-S	PDC520309S
	1600	4:LSI ARMS	N: 3 Relays/ZSI/CAM	PDC54H1600E3NF-S	PDC520310S
	0630	4:LSI ARMS	M: Modbus /3 Relays/ZSI/CAM	PDC54H0630E4MF-S	PDC520331S
	0800	4:LSI ARMS	M: Modbus /3 Relays/ZSI/CAM	PDC54H0800E4MF-S	PDC520332S
	1000	4:LSI ARMS	M: Modbus /3 Relays/ZSI/CAM	PDC54H1000E4MF-S	PDC520333S
	1250	5:LSIGARMS	M: Modbus /3 Relays/ZSI/CAM	PDC54H1250E4MF-S	PDC520334S
	1600	5:LSIGARMS	M: Modbus /3 Relays/ZSI/CAM	PDC54H1600E4MF-S	PDC520335S
	0630	5:LSIGARMS	M: Modbus /3 Relays/ZSI/CAM	PDC54H0630E5MF-S	PDC520336S
	0800	5:LSIGARMS	M: Modbus /3 Relays/ZSI/CAM	PDC54H0800E5MF-S	PDC520337S
	1000	5:LSIGARMS	M: Modbus /3 Relays/ZSI/CAM	PDC54H1000E5MF-S	PDC520338S
	1250	4:LSI ARMS	M: Modbus /3 Relays/ZSI/CAM	PDC54H1250E5MF-S	PDC520339S
	1600	4:LSI ARMS	M: Modbus /3 Relays/ZSI/CAM	PDC54H1600E5MF-S	PDC520340S
PXR25	0630	4:LSI ARMS	M: Modbus /3 Relays/ZSI/CAM	PDC54H0630P4MF-S	PDC520351S
	0800	4:LSI ARMS	M: Modbus /3 Relays/ZSI/CAM	PDC54H0800P4MF-S	PDC520352S
	1000	4:LSI ARMS	M: Modbus /3 Relays/ZSI/CAM	PDC54H1000P4MF-S	PDC520353S
	1250	5:LSIGARMS	M: Modbus /3 Relays/ZSI/CAM	PDC54H1250P4MF-S	PDC520354S
	1600	5:LSIGARMS	M: Modbus /3 Relays/ZSI/CAM	PDC54H1600P4MF-S	PDC520355S
	0630	5:LSIGARMS	M: Modbus /3 Relays/ZSI/CAM	PDC54H0630P5MF-S	PDC520356S
	0800	5:LSIGARMS	M: Modbus /3 Relays/ZSI/CAM	PDC54H0800P5MF-S	PDC520357S
	1000	5:LSIGARMS	M: Modbus /3 Relays/ZSI/CAM	PDC54H1000P5MF-S	PDC520358S
	1250	5:LSIGARMS	M: Modbus /3 Relays/ZSI/CAM	PDC54H1250P5MF-S	PDC520359S
	1600	5:LSIGARMS	M: Modbus /3 Relays/ZSI/CAM	PDC54H1600P5MF-S	PDC520360S

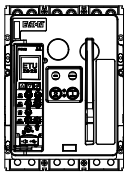

PDC5 S Disconnect (Equipped as Standard with Motor Operator, Shunt Release and Closing Release)

Disconnecting switch
Fixed mounting

		3P		4P	
	Rated current	Part No.	Article No.	Part No.	Article No.
Breaking capacity S disconnect					
SWD	0630	PDC53S0630SNNF	PDC510001	PDC54S0630SNNF	PDC510006
	0800	PDC53S0800SNNF	PDC510002	PDC54S0800SNNF	PDC510007
	1000	PDC53S1000SNNF	PDC510003	PDC54S1000SNNF	PDC510008
	1250	PDC53S1250SNNF	PDC510004	PDC54S1250SNNF	PDC510009
	1600	PDC53S1600SNNF	PDC510005	PDC54S1600SNNF	PDC510010

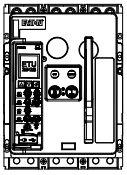

PDC5 S Disconnect (Without Motor Operator, Shunt Release and Closing Release)

Disconnecting switch
Fixed mounting

		3P		4P	
	Rated current	Part No.	Article No.	Part No.	Article No.
Breaking capacity S disconnect					
SWD	0630	PDC53S0630SNNF-S	PDC510001S	PDC54S0630SNNF-S	PDC510006S
	0800	PDC53S0800SNNF-S	PDC510002S	PDC54S0800SNNF-S	PDC510007S
	1000	PDC53S1000SNNF-S	PDC510003S	PDC54S1000SNNF-S	PDC510008S
	1250	PDC53S1250SNNF-S	PDC510004S	PDC54S1250SNNF-S	PDC510009S
	1600	PDC53S1600SNNF-S	PDC510005S	PDC54S1600SNNF-S	PDC510010S

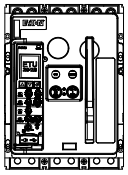

PDC5 S Disconnect (Equipped as Standard with Motor Operator, Shunt Release and Closing Release)

Disconnecting switch
Drawout mounting

		3P*		4P*	
	Rated current	Part No.	Article No.	Part No.	Article No.
Breaking capacity S disconnect					
SWD	0630	PDC53S0630SNNW	PDC510011	PDC54S0630SNNW	PDC510016
	0800	PDC53S0800SNNW	PDC510012	PDC54S0800SNNW	PDC510017
	1000	PDC53S1000SNNW	PDC510013	PDC54S1000SNNW	PDC510018
	1250	PDC53S1250SNNW	PDC510014	PDC54S1250SNNW	PDC510019
	1600	PDC53S1600SNNW	PDC510015	PDC54S1600SNNW	PDC510020

*Product is not available in the market yet

*Product is not available in the market yet

I Ordering - Accessories I

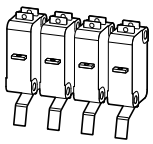

Standard Auxiliary Contact

Product description	Frame for use with	Part No.	Article No.	Units per package	Note
The basic device is equipped as standard with 2 normally open (NO) and 2 normally closed (NC) auxiliary contacts					
Additional 2 NO and 2 NC auxiliary contacts	PDC5	IZMC1-AS22-16-2	YC-500188	1	The 1st and 2nd pairs pf auxiliary contacts are interchangeable to the 3rd and 4th pairs pf auxiliary contacts

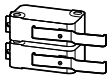

Trip Signal Auxiliary Contact

Product description	Frame for use with	Part No.	Article No.	Units per package	Note
Additional 2 NO and 2 NC auxiliary contacts	PDC5	IZMC1-OTS16-2	YC-500163	1	

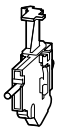

Trip Indicator

Product description	Frame for use with	Part No.	Article No.	Units per package	Note
Interlocking trip indicator: After tripping, it must be reset before it can be reclosed. It can be used in combination with OTS and remote reset. INX load switch is not available.	PDC5	IZMC1-RA16-2	YC-500162	1	

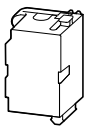

Closing Release

Product description	Frame for use with	Part No.	Article No.	Units per package	Note
Latch check switch (LCS) is not included					
24 V DC	PDC5	IZMC1-SR24DC-2	YC-500176	1	220-240V closing release is supplied as standard. If other voltage levels are required, need to order and replace and mounting
48 V DC	PDC5	IZMC1-SR48DC-2	YC-500177	1	
110 - 125 V AC/DC	PDC5	IZMC1-SR110AD-2	YC-500178	1	
220 - 240 V AC/DC	PDC5	IZMC1-SR230AD-2	YC-500179	1	

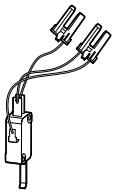

Latch Check Switch

Product description	Frame for use with	Part No.	Article No.	Units per package	Note
Latch check switch = Latch check signal with 1 convertible contact (1CO), must install closing release	PDC5	IZMC1-LCS-2	YC-500186	1	For connecting external signal to closing release
	PDC5	IZMC1-LCS-SR-2	YC-500187	1	

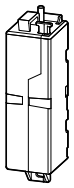

Shunt Release

Product description	Frame for use with	Part No.	Article No.	Units per package	Note
Includes 2 normally open (NO) and 2 normally closed (NC) contacts. INX load switch is not available.					
24 V DC	PDC5	IZMC1-ST24DC-2	YC-500172	1	220-240V closing release is supplied as standard. If other voltage levels are required, need to order separately for mounting
48 V DC	PDC5	IZMC1-ST48DC-2	YC-500173	1	
110 - 125 V AC/DC	PDC5	IZMC1-ST110AD-2	YC-500174	1	
220 - 240 V AC/DC	PDC5	IZMC1-ST230AD-2	YC-500175	1	

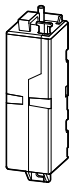

Under-Voltage Release

Product description	Frame for use with	Part No.	Article No.	Units per package	Note
Can not be used with the second shunt release					
24 V DC	PDC5	IZMC1-UVR24DC-2	YC-500180	1	If ordered separately for upgrade, need to order a separate secondary terminal block. See Page 12.
48 V DC	PDC5	IZMC1-UVR48DC-2	YC-500181	1	
110 - 125 V AC/DC	PDC5	IZMC1-UVR110AD-2	YC-500182	1	
220 - 240 V AC/DC	PDC5	IZMC1-UVR220AD-2	YC-500183	1	

Under-Voltage Time Delay Module

Product description	Frame for use with	Part No.	Article No.	Units per package	Note
When for use with under-voltage release, time setting is 0.1 s, 0.5 s, 1.0 s, 2.0 s. 230 V AC	PDC5	IZMC1-UVR-TD-230AC	YC-500206	1	Use in combination with IZMX-UVR220AD

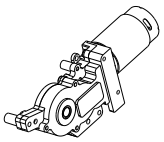

Motor Operator

Product description	Frame for use with	Part No.	Article No.	Units per package	Note
Charge the spring force storage mechanism for remote or local actuation. Spring charging status indicator is included.					
110 - 127 V AC 50/60 Hz 110 - 125 V DC	PDC5	IZMC1-M16-110AD-2	YC-500170	1	Equipped as standard with YC-500171 motor; If other voltage levels are required, need to order separately, remove and replace for mounting.
208 - 240 V AC 50/60 Hz 220 - 250 V DC	PDC5	IZMC1-M16-230AD-2	YC-500171	1	
24 V DC	PDC5	IZMC1-M16-24DC-2	YC-500168	1	
48 V DC	PDC5	IZMC1-M16-48DC-2	YC-500169	1	

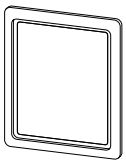

Fixed Type Door Escutcheon

Product description	Frame for use with	Part No.	Article No.	Units per package	Note
Fixed circuit breaker IP41 door escutcheon	PDC5	IZMC1-DEG91-F-2	YC-500202	1	

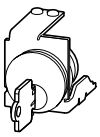

OFF Position Safety Lock

Product description	Frame for use with	Part No.	Article No.	Units per package	Note
	PDC5	IZMC1-1L1K	YC-500193	1	Kirk installation kit with lock cylinder and key, A type
	PDC5	IZMC1-1L1K-B	YC-500194	1	Kirk installation kit with lock cylinder and key, B type
	PDC5	IZMC1-1L1K-C	YC-500195	1	Kirk installation kit with lock cylinder and key, C type

Communication Module

Product description	Frame for use with	Part No.	Article No.	Units per package	Note
External Ethernet communication module	PDC5	IZMC2-ECAM-2	YC-500121	1	Rail mounting Separate ordering required
External ModBus communication module	PDC5	IZMC2-MCAM-2	YC-500119	1	
External Profi tBUS DP communication module	PDC5	IZMC2-PCAM-2	YC-500120	1	

Operations Counter

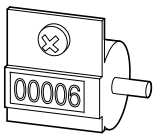

Product description	Frame for use with	Part No.	Article No.	Units per package	Note
To record the number of ON-OFF operations conducted by the circuit breaker. It is not wired to any motor operator.	PDC5	IZMC1-OC16-2	YC-500185	1	

Power Module

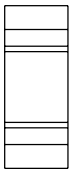

Product description	Frame for use with	Part No.	Article No.	Units per package	Note
External voltage metering module To provide voltage metering signal to PXR25 trip unit; one module can connect to up tp 16 units, with a max. distance of 75 meters.	PDC5	IZMC2-PXR-PTM-2	YC-500160	1	Rail mounting Separate ordering required Not included in the PXR25 Trip unit

Button Cover

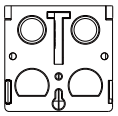

Product description	Frame for use with	Part No.	Article No.	Units per package	Note
(With optional padlock) Sealed button cover					
P = Plastic cover	PDC5	IZMC1-PLPC16-P-2	YC-500190	1	
M = Metal cover	PDC5	IZMC1-PLPC16-M-2	YC-500191	1	

Phase Barrier

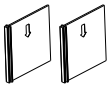

Product description	Frame for use with	Part No.	Article No.	Units per package	Note
Phase barrier 100 3P	PDC5	PDC5XIB3PL100	PDC720085	2	
Phase barrier 200 3P	PDC5	PDC5XIB3PL200	PDC720086	2	
Phase barrier 100 4P	PDC5	PDC5XIB4PL100	PDC720087	3	
Phase barrier 200 4P	PDC5	PDC5XIB4PL200	PDC720088	3	

Extension Board

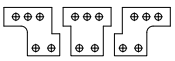

Product description	Frame for use with	Part No.	Article No.	Units per package	Note
95MM phase spacing extension board 3P	PDC5	PDC5X3TSP1600W95	PDC720089	3	
116MM phase spacing extension board 3P	PDC5	PDC5X3TSP1600W116	PDC720090	3	
95MM phase spacing extension board 4P	PDC5	PDC5X4TSP1600W95	PDC720091	4	
116MM phase spacing extension board 3P	PDC5	PDC5X4TSP1600W116	PDC720092	4	

I Features and Data I

Power Defense Molded Case Circuit Breaker
Tripping Characteristics

PXR20/25 Long Delay (L) and Short Delay (S) Curves
L-Protection：I^2t characteristic curve；S-Protection：Flat characteristic curve

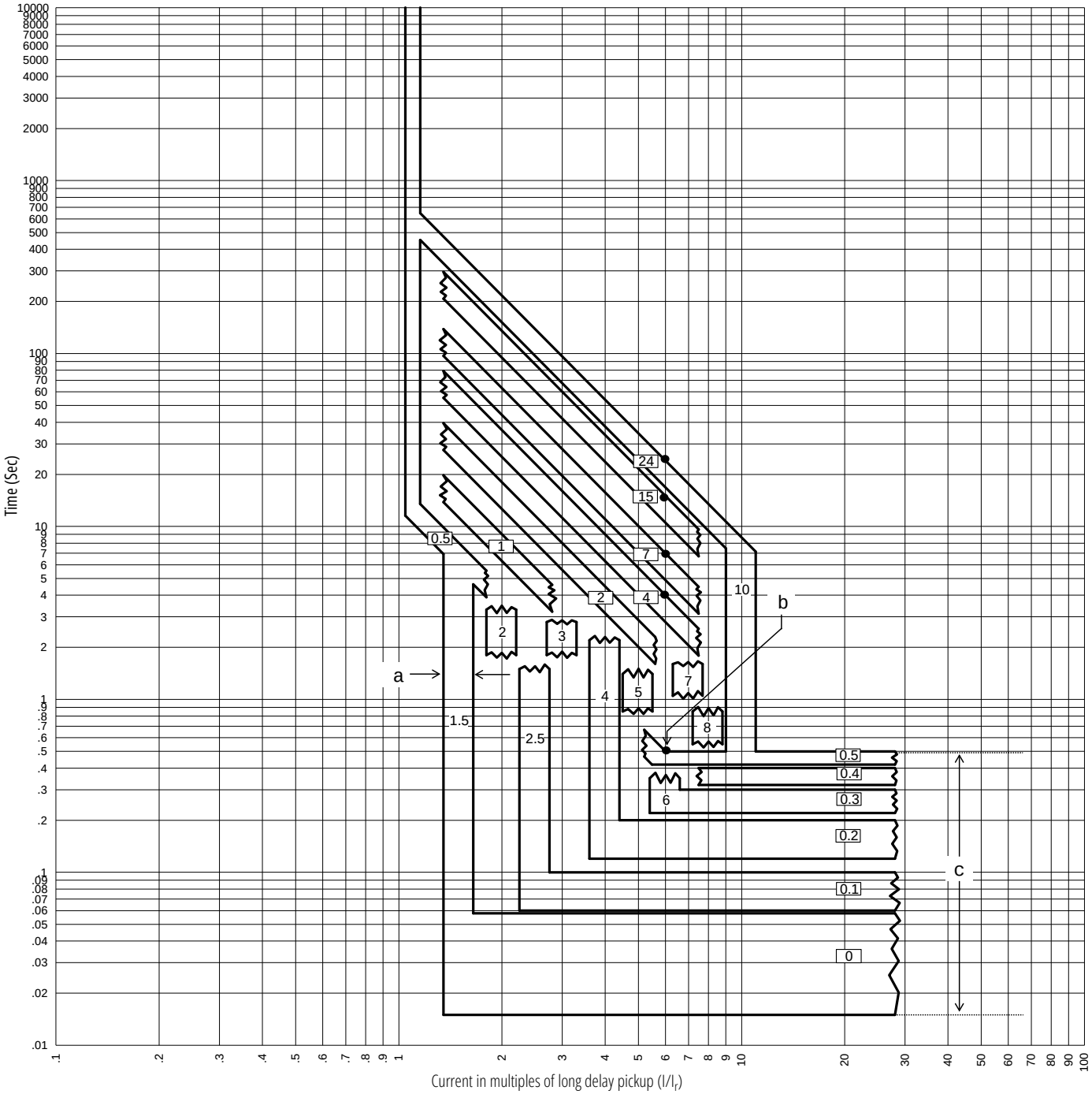

Notes:
1. Short delay pickup, the actual pickup point has 100%±10% tolerance.
2. Long delay I^2T slopes flattens out at 6x of Ir.
3. Short time delay from 0 (50ms) to 0.5s, with +0 / -80ms tolerance except 0.1s and 0s setting;
   0.1s setting, has tolerance of 0.06s to 0.1s;
   0s setting, nominal clear time is 60ms with auxiliary power or 120ms without.
4. If long delay thermal memory is enabled, trip times may be shorter than indicated in this chart.
5. Curves applies from -20°C to +50°C ambient. Temperatures above +85°C will cause over temperature trip.
6. This curve is for 50Hz, 60Hz applications.
7. The total clearing times shown include the response time for trip unit, the breaker opening and the interruption of the current.

PXR20/25 Long Delay (L) and Short Delay (S) Curves
S-Protection: I^2t Characteristic Curve

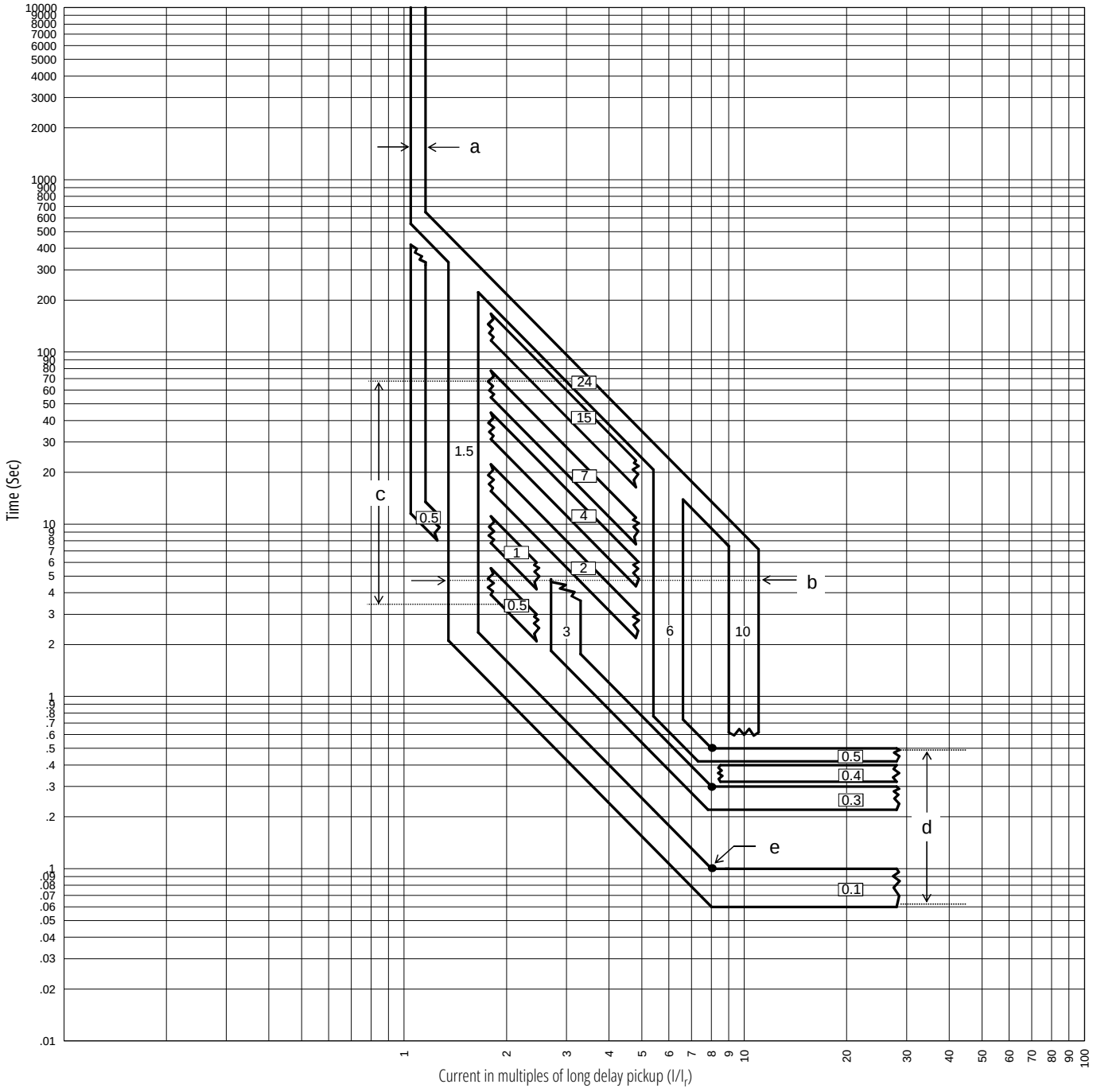

Notes:

1. This curve shown as a multiple of the LONG PU setting (I_r). The actual pickup point occurs at 110% of the I_r with ±5% tolerance.
2. Short Delay Pickup (SDPU) = 1.5x to 10x of I_r, have ±10% tolerance.
3. Long Delay Time = 0.5s to 24s, have +0 / -30% tolerance.
4. Short Delay Slope = I^2T. The short delay pickup values have ±10% tolerance.
   Time setting from 0.1s to 0.5s, with steps of 0.1s, except 0.2s.
   Tolerance is 100% +0 / -30% except 0. 1s has tolerance 100% +0 / -40%.
5. The I^2T curves intersect the top of the flat time tolerance band at 8x of I_r. The bottom of the flat time tolerance band projects to the intersection point of the I^2T curves, determining the curve shape
6. If long delay thermal memory is enabled, trip times may be shorter than indicated in this chart.
7. Curves applies from -20°C to +50°C ambient. Temperatures above +85°C will cause over temperature trip.
8. This curve is for 50Hz, 60Hz applications.
   The total clearing times shown include the response time for trip unit, the breaker opening and the interruption of the current.

PXR20/25 Instantaneous Trip (I) Curve
I-Protection: Adjustable

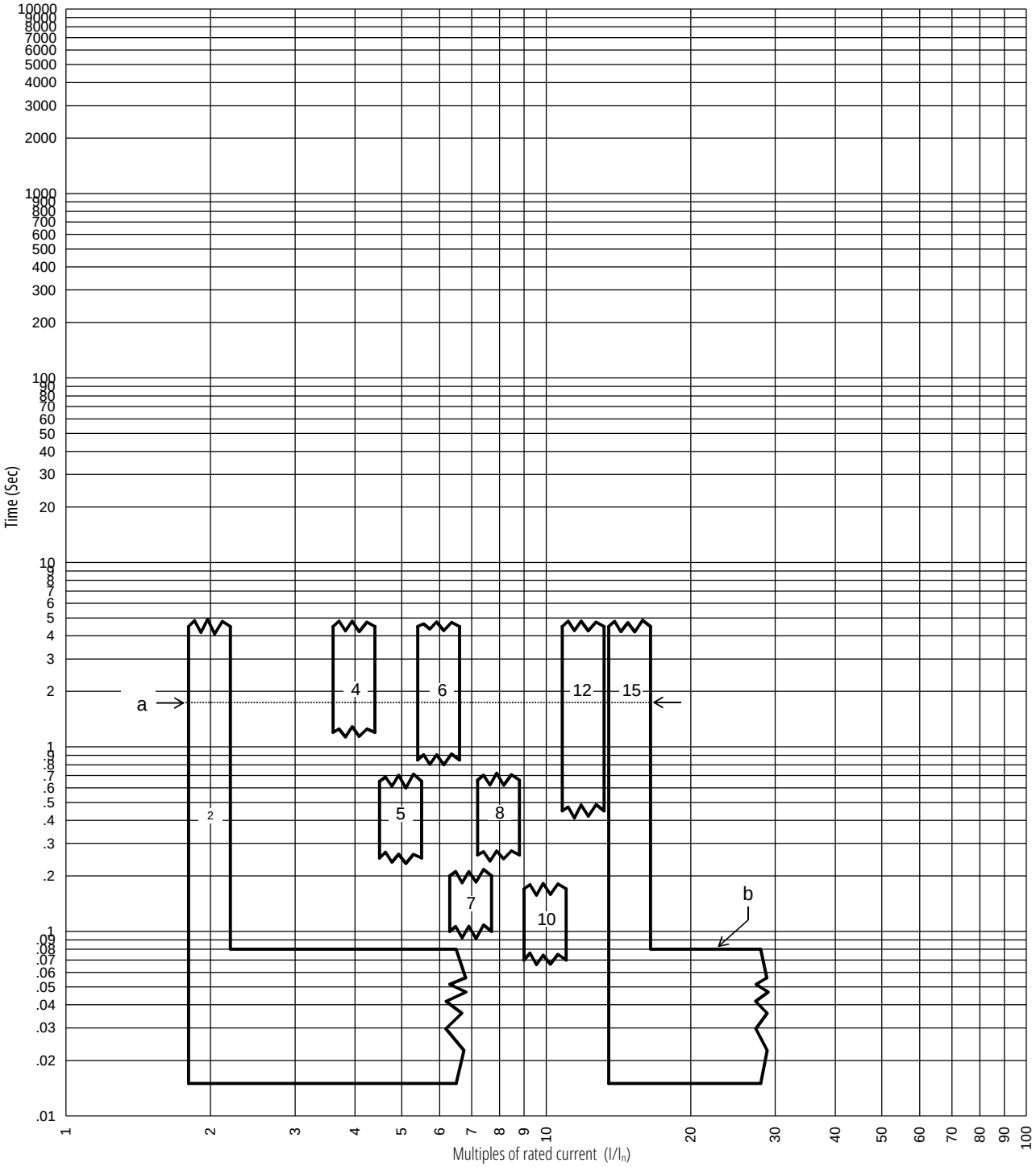

Notes:

1. The Instantaneous trip curve has ±10% tolerance.
2. The nominal Instantaneous trip time is 80ms with external power supply or 100ms without.
3. Instantaneous protection could be disabled via the rotary button.
4. The pickup values for Instantaneous protection shown as multiples of I_n.
5. The end of the curve is determined by the interrupting rating of the circuit breaker.
6. Curves applies from -20°C to +50°C ambient. Temperatures above +85°C will cause over temperature trip.
7. This curve is for 50Hz, 60Hz applications.
8. The total clearing times shown include the response time for trip unit, the breaker opening and the interruption of the current.

PXR20/25 Instantaneous Trip (I) Curve
High Fault Current Instantaneous Trip (High Instantaneous)

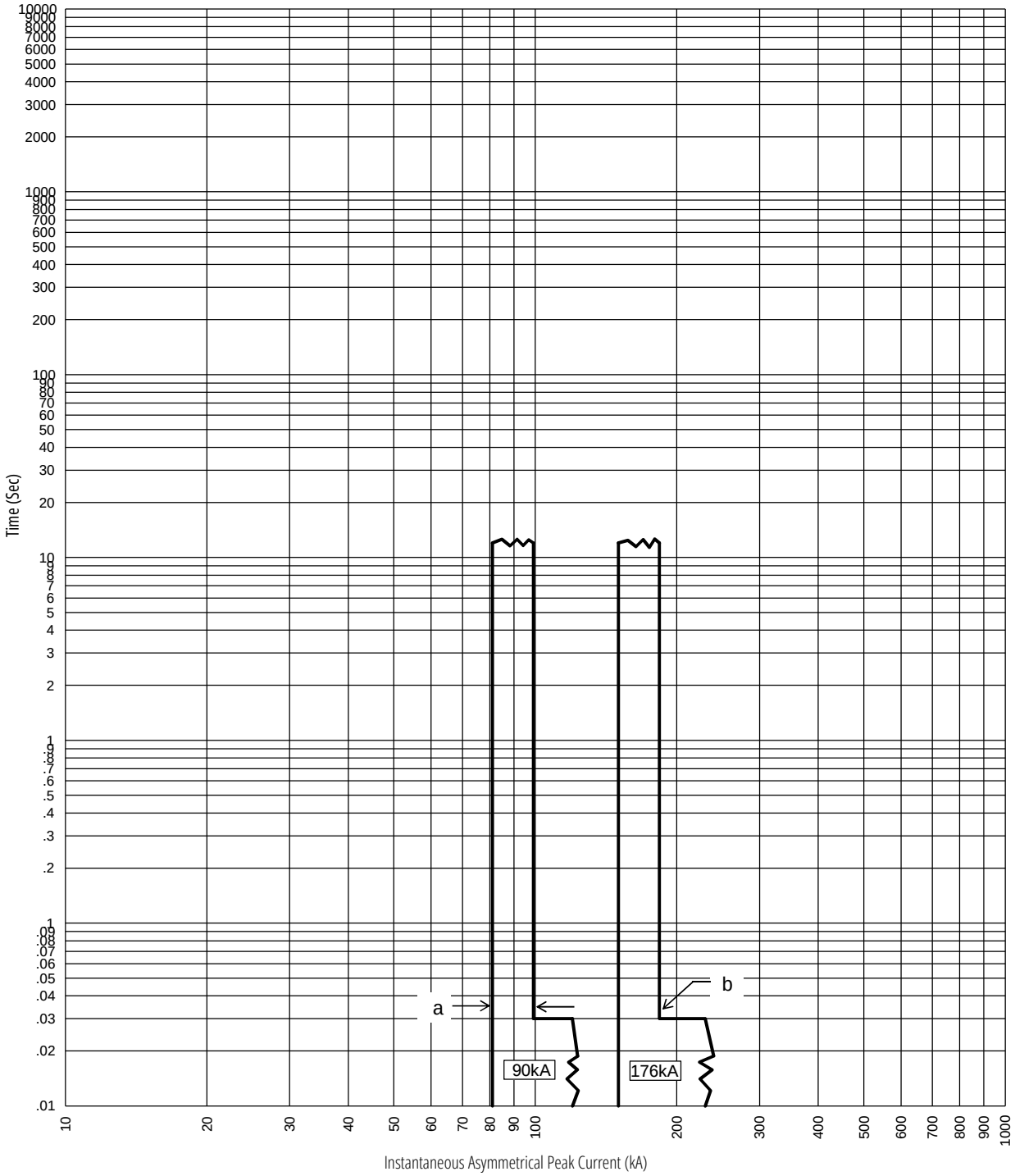

Notes:

1. High Instantaneous Trip function of the breaker is set as fixed 90kA peak current, with ±10% tolerance.
2. This protection is functional even when the High Instantaneous is set to the OFF position.
3. The PXR trip unit will light the Instantaneous LED for a High Instantaneous trip.
4. The Instantaneous clearing times shown are conservative and consider the maximum response times of the trip unit, the circuit breaker opening, and the interruption of the current under factors that contribute to worst case conditions, like: maximum rated current, single phase interruption, and minimum power factor. Faster clearing times are possible depending on the specific system conditions and settings.

PXR20/25 Ground Protection (G) Curve
G: Ground Protection - Flat Characteristic Curve

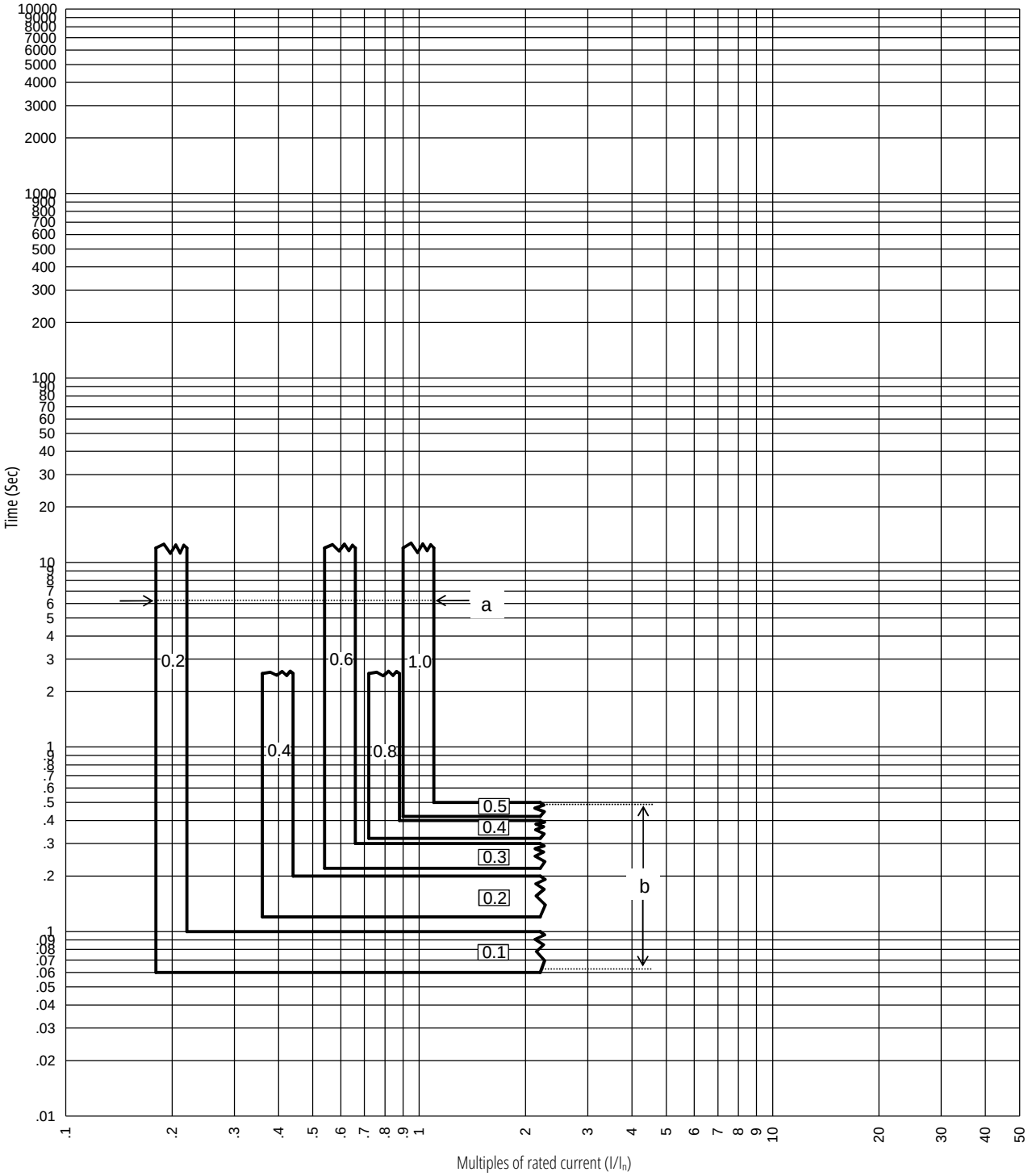

Notes:

1. Ground PU setting from 0.2 to 1.0 of I_n with steps of 0.2 , have tolerance of ±10%.
2. Ground Flat time from 0.1s to 0.5s, with 0.1s increments.
3. Ground slope: Flat, trip time tolerance is +0 / -80ms for all settings except 0.1s setting is 0.06s to 0.1s.
4. The pickup values for Ground protection shown as multiples of I_n.
5. The end of the curve is determined by the interrupting rating of the circuit breaker.
6. Curves applies from -20°C to +50°C ambient. Temperatures above +85°C will cause over temperature trip.
7. This curve is for 50Hz, 60Hz applications.
8. The total clearing times shown include the response time for trip unit, the breaker opening and the interruption of the current.

PXR20/25 Ground Protection (G) Curve
G: Ground Fault Protection - I^2t Characteristic curve

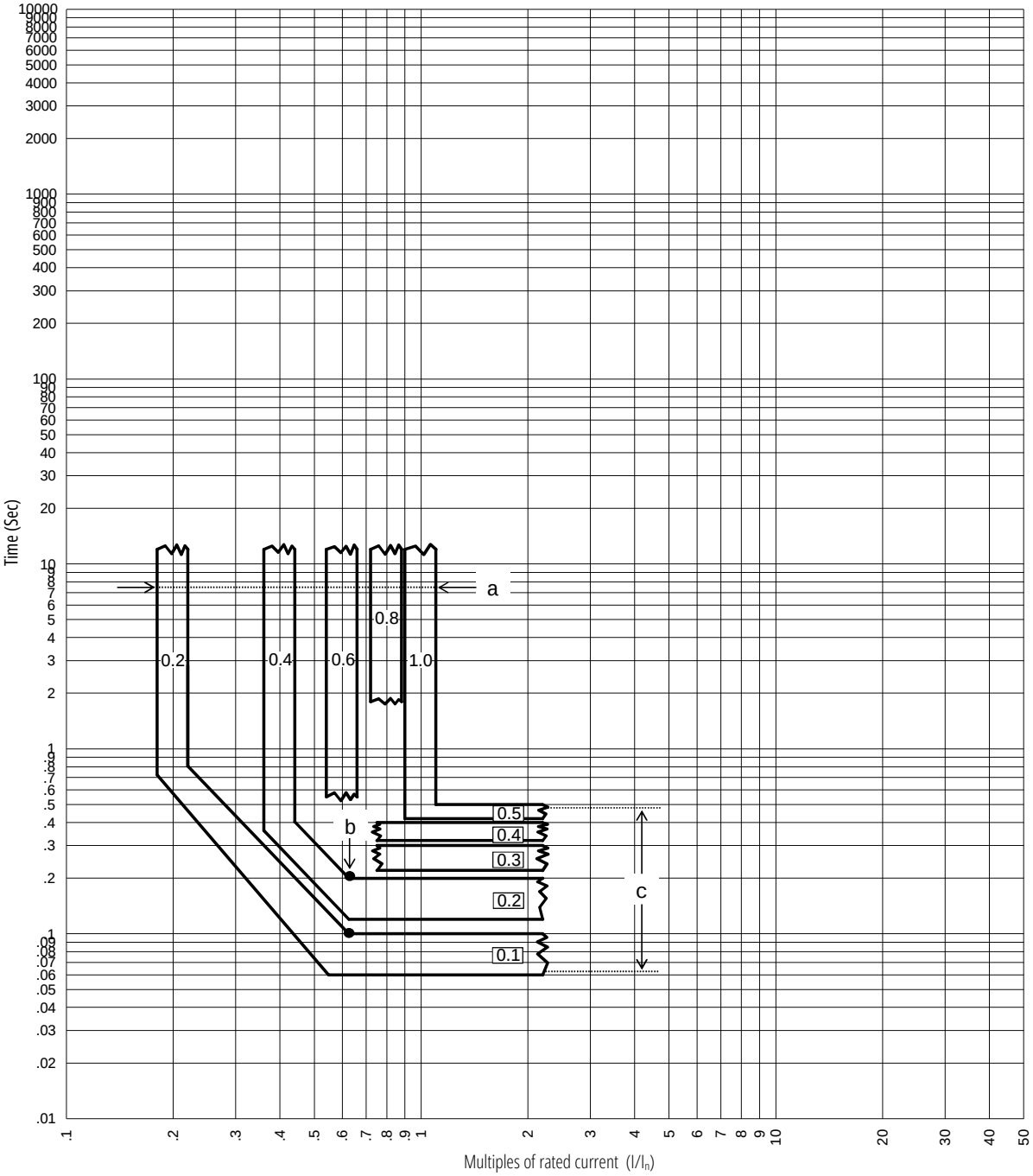

Notes:

1. Ground PU setting from 0.2 to 1.0 of I_n with steps of 0.2 , have tolerance of ±10%.
2. Beak points at 0.625 x I_n to flat out.
3. Ground I^2T time from 0.1s to 0.5s, with 0.1s increments.
4. Ground slope: Flat, trip time tolerance is +0 / -80ms for all settings except 0.1s setting is 0.06s to 0.1s.
   Ground slope: I^2T , tolerance is
   0.1s, 0.2s : +0 / -40%
   0.3s, 0.4s, 0.5s : +0 / -30%
5. The Ground pickup values shown as multiples of the Current Rating (I_n).
6. The end of the curve is determined by the interrupting rating of the circuit breaker.
7. Curves applies from -20°C to +50°C ambient. Temperatures above +85 °C will cause over temperature trip.
8. This curve is for 50Hz ,60Hz applications.
9. The total clearing times shown include the response time for trip unit, the breaker opening and the interruption of the current.

PXR20/25 Maintenance Mode Curve
ArcFlash Reduction Maintenance Mode

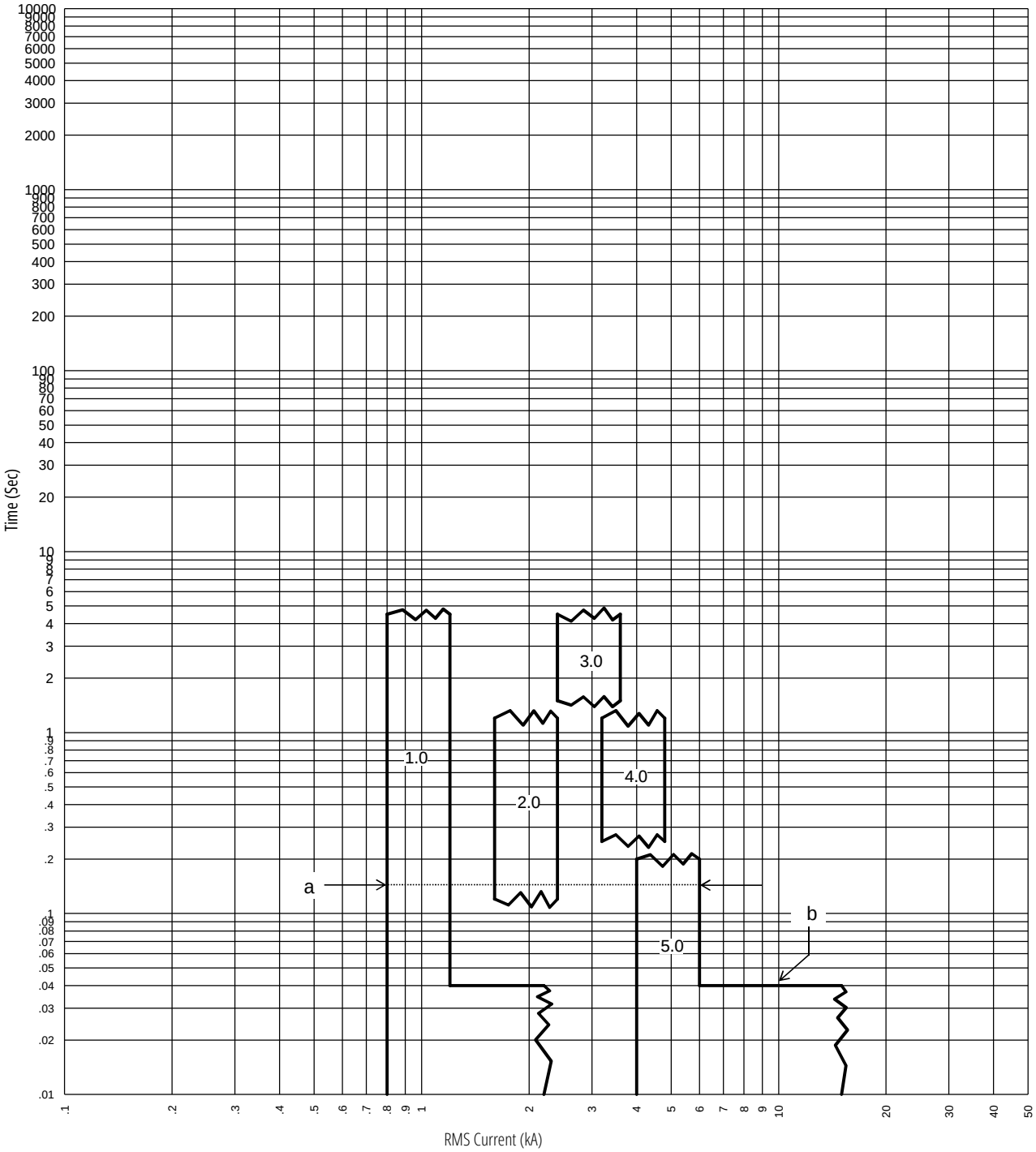

Notes:

1. Nominal action values have tolerance of ±20%.
2. The nominal Maintenance Mode trip time is 40ms with external power supply.
3. The Maintenance Mode feature must be ENABLED via setting Maintenance Mode rotary switch on the trip unit to ON position, remote switch, or communications. The circuit breaker is in Maintenance Mode being shown by blue LED lit on the Maintenance Mode rotary button.
4. The PXR trip unit will light the Instantaneous LED for a Maintenance Mode Trip.
5. The end of the curve is determined by the interrupting rating of the circuit breaker.
6. Curves applies from -20°C to +50°C ambient. Temperatures above +85°C will cause over temperature trip.
7. This curve is for 50Hz ,60Hz applications.
8. The total clearing times shown include the response time for trip unit, the breaker opening and the interruption of the current.

PXR20/25 Maintenance Mode Curve
Arcflash Reduction Maintenance Mode

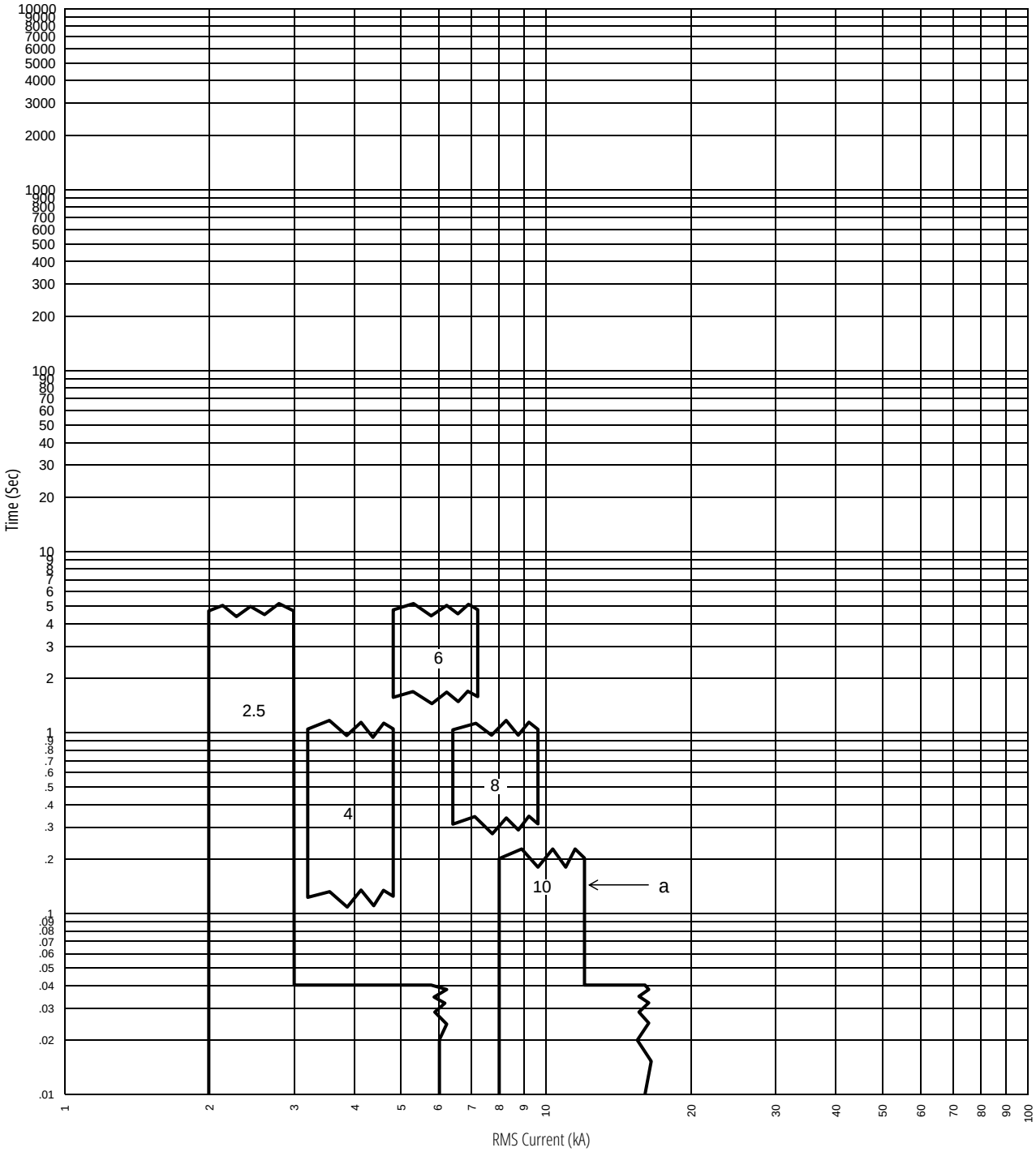

Notes:

1. Nominal action values have tolerance of ±20%.
2. The nominal Maintenance Mode trip time is 40ms with external power supply.
3. The Maintenance Mode feature must be ENABLED via setting Maintenance Mode rotary switch on the trip unit to ON position, remote switch, or communications. The circuit breaker is in Maintenance Mode being shown by blue LED lit on the Maintenance Mode rotary button.
4. The PXR trip unit will light the Instantaneous LED for a Maintenance Mode Trip.
5. The end of the curve is determined by the interrupting rating of the circuit breaker.
6. Curves applies from -20°C to +50°C ambient. Temperatures above +85°C will cause over temperature trip.
7. This curve is for 50Hz ,60Hz applications.
8. The total clearing times shown include the response time for trip unit, the breaker opening and the interruption of the current.

PXR20/25 Maintenance Mode Curve
ArcFlash Reduction Maintenance Mode

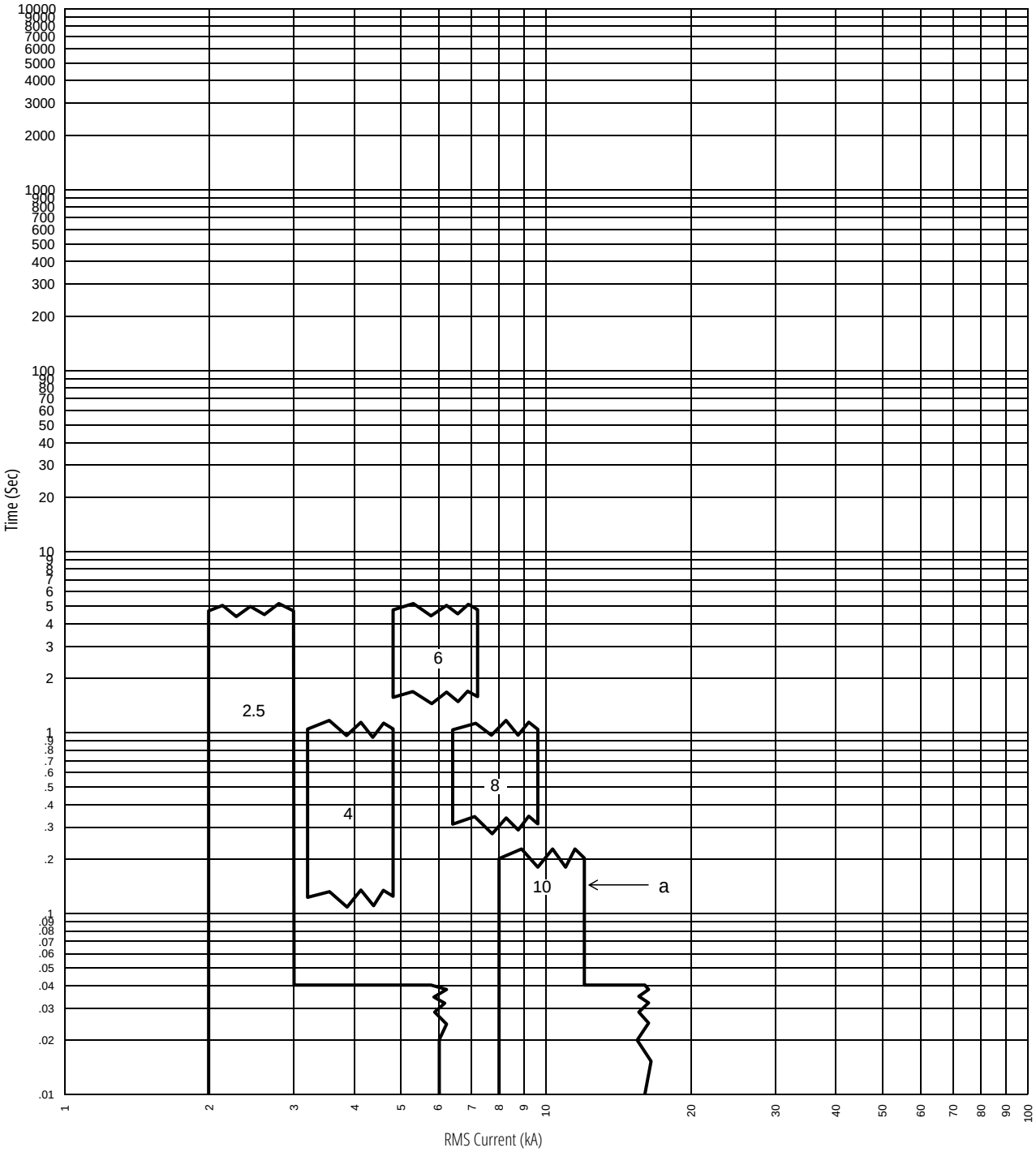

Notes:

1. Nominal action values have tolerance of ±20%.
2. The nominal Maintenance Mode trip time is 40ms with external power supply.
3. The Maintenance Mode feature must be ENABLED via setting Maintenance Mode rotary switch on the trip unit to ON position, remote switch, or communications. The circuit breaker is in Maintenance Mode being shown by blue LED lit on the Maintenance Mode rotary button.
4. The PXR trip unit will light the Instantaneous LED for a Maintenance Mode Trip.
5. The end of the curve is determined by the interrupting rating of the circuit breaker.
6. Curves applies from -20°C to +50°C ambient. Temperatures above +85°C will cause over temperature trip.
7. This curve is for 50Hz ,60Hz applications.
8. The total clearing times shown include the response time for trip unit, the breaker opening and the interruption of the current.

PXR20/25 Long Delay (L) Curve
L-Protection: $I^{0.5}t$ Characteristic Curve

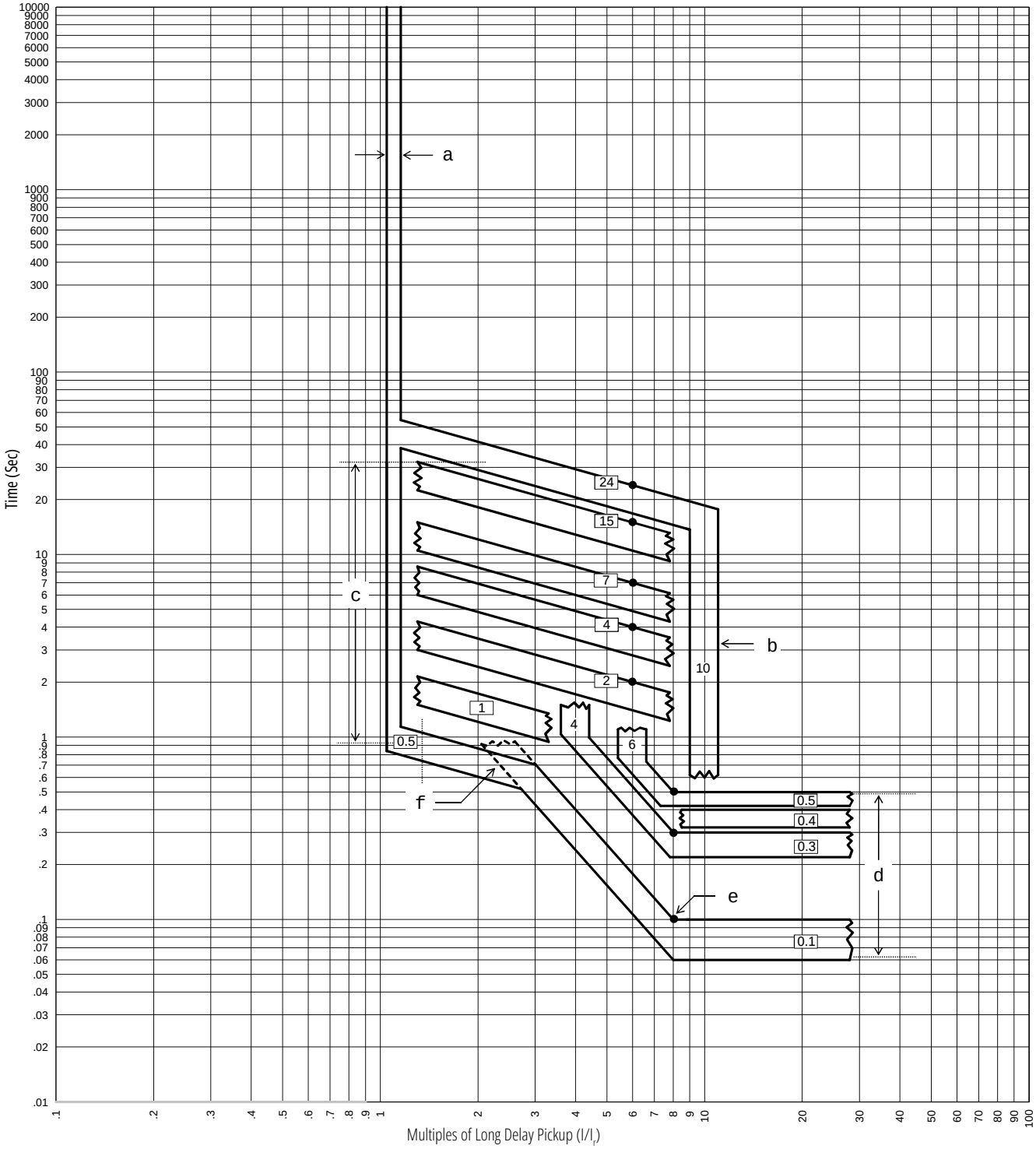

Notes:

1. This curve shown as a multiple of the LONG PU setting (I_r). The actual pickup point occurs at 110% of the I_r with ±5% tolerance.
2. SDPU = 1.5x to 10x of I_r, have ± 10% tolerance.
3. LD Time = 0.5s to 24s, have +0 / -30% tolerance.
4. SD Slope = I^2T. The short pickup points have ±10% tolerance. time setting from 0.1s to 0.5s, with steps of 0.1s, except 0.2s.
   Tolerance is +0 / -30% except 0.1s has +0 / -40% tolerance.
5. The I^2T curves intersect the top of the flat time tolerance band at 8x of I_r. The bottom of the flat time tolerance band projects to the intersection point of the I^2T curves, determining the curve shape.
6. If the short delay time is longer than long delay time, the short delay trip time will follow the long time setting.
7. If long delay thermal memory is enabled, trip times may be shorter than indicated in this chart.
8. Curves applies from -20°C to +50°C ambient. Temperatures above +85°C will cause over temperature trip.
9. This curve is for 50Hz ,60Hz applications.
10. The total clearing times shown include the response time for trip unit, the breaker opening and the interruption of the current.

PXR20/25 Long Delay (L) Curve
L-Protection: I^1t Characteristic Curve

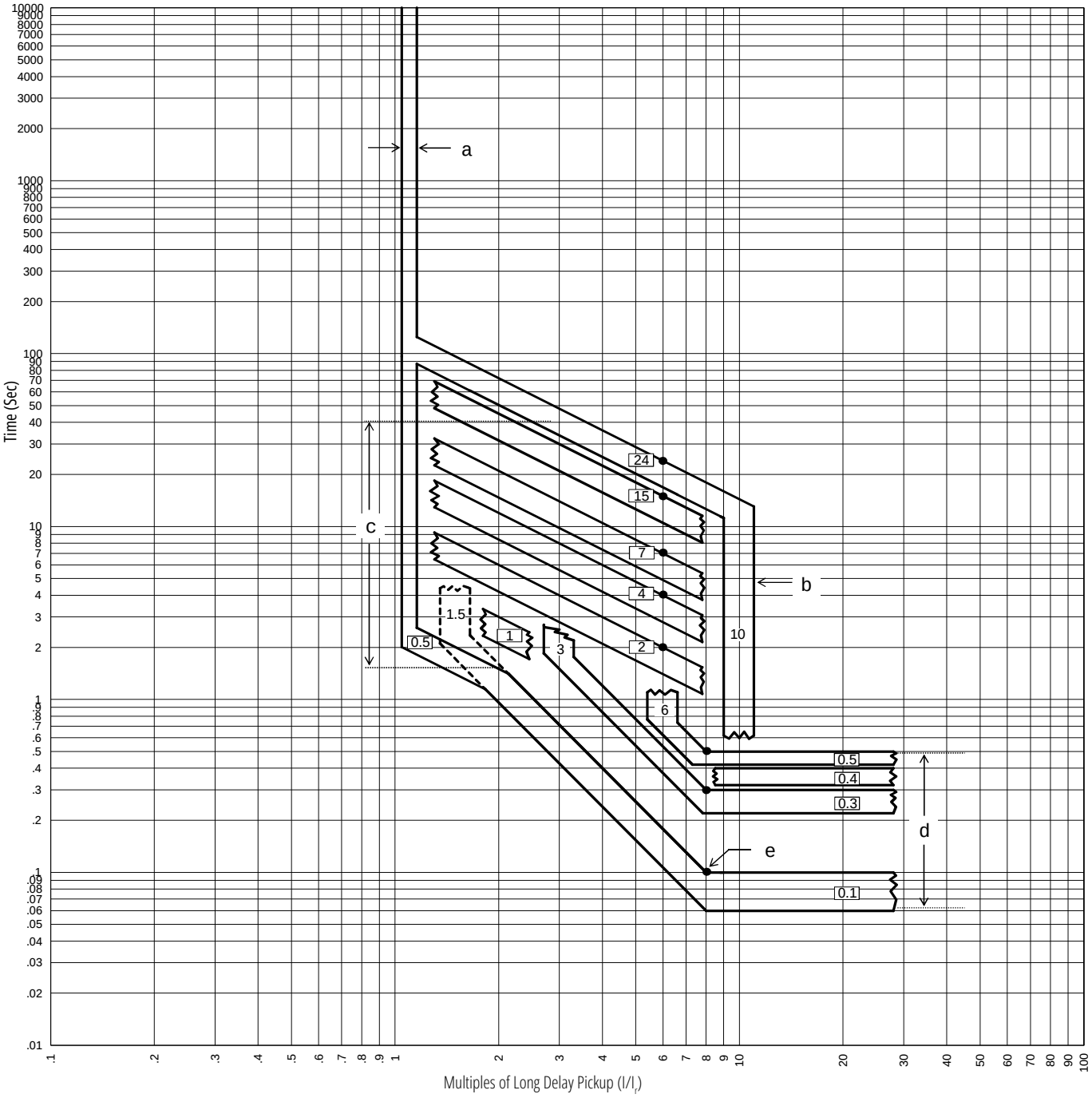

Notes:

1. This curve shown as a multiple of the LONG PU setting (I_r). The actual pickup point occurs at 110% of the I_r with ±5% tolerance.
2. SDPU = 1.5x to 10x of I_r, have ± 10% tolerance.
3. LD Time = 0.5s to 24s, have +0 / -30% tolerance.
4. SD Slope = I_rT. The short pickup points have ±10% tolerance.
   Time setting from 0.1s to 0.5s, with steps of 0.1s, except 0.2s.
   Tolerance is +0 / -30% except 0. 1s has +0 / -40% tolerance.
5. The I^2T curves intersect the top of the flat time tolerance band at 8x of I_r. The bottom of the flat time tolerance band projects to the intersection point of the I^2T curves, determining the curve shape.
6. If long delay thermal memory is enabled, trip times may be shorter than indicated in this chart.
7. Curves applies from -20°C to +50°C ambient. Temperatures above +85°C will cause over temperature trip.
8. This curve is for 50Hz, 60Hz applications.
9. The total clearing times shown include the response time for trip unit, the breaker opening and the interruption of the current.

PXR20/25 Long Delay (L) Curve
L-Protection: I^4t curve

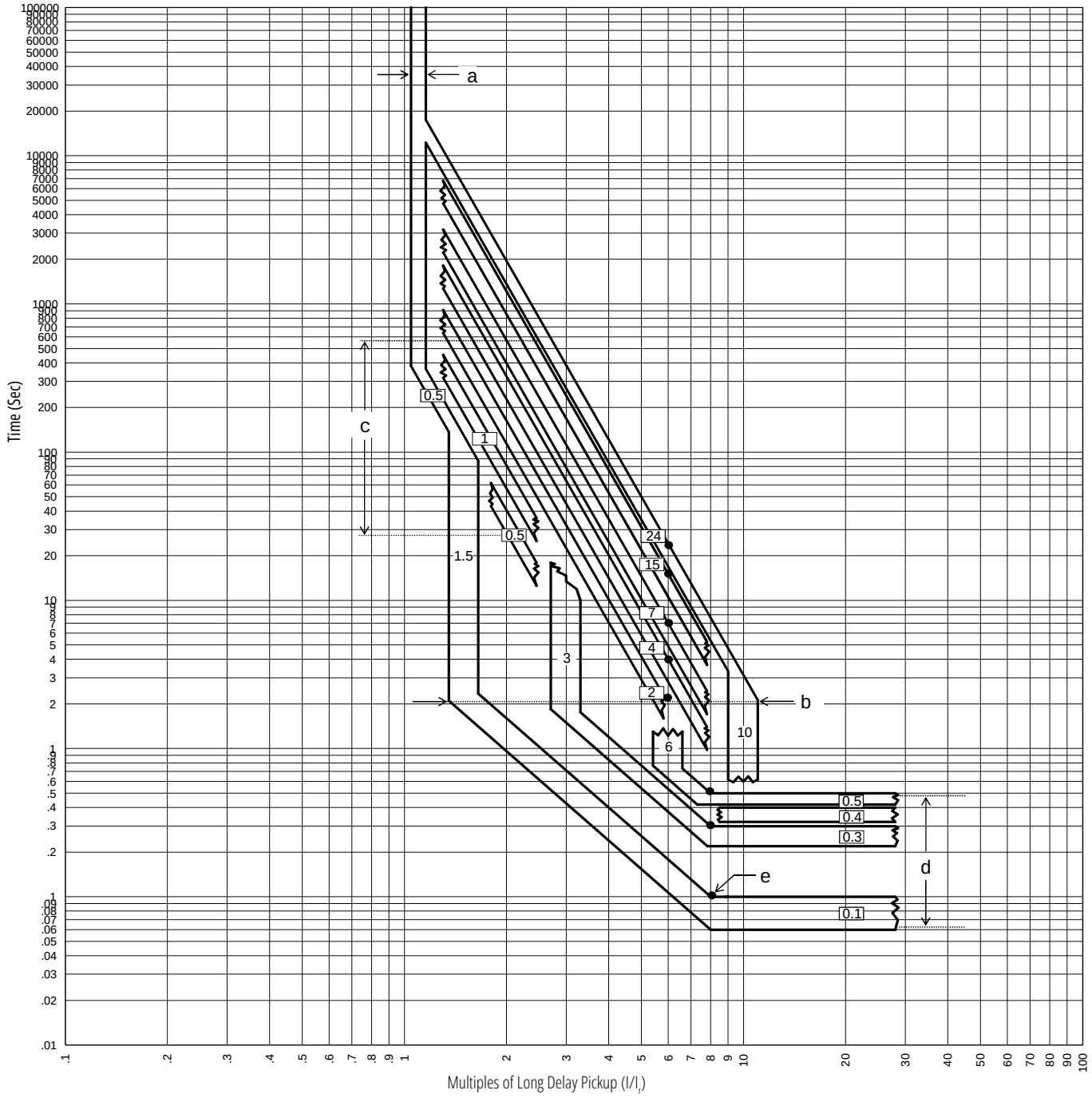

Notes:

1. This curve shown as a multiple of the LONG PU setting (I_r). The actual pickup point occurs at 110% of the I_r with ±5% tolerance.
2. SDPU = 1.5x to 10x of I_r, have ± 10% tolerance.
3. LD Time = 0.5s to 24s, have +0 / -30% tolerance.
4. SD Slope = I_rT. The short pickup points have ±10% tolerance.
   Time setting from 0.1s to 0.5s, with steps of 0.1s, except 0.2s.
   Tolerance is +0 / -30% except 0. 1s has +0 / -40% tolerance.
5. The I^2T curves intersect the top of the flat time tolerance band at 8x of I_r. The bottom of the flat time tolerance band projects to the intersection point of the I^2T curves, determining the curve shape.
6. If long delay thermal memory is enabled, trip times may be shorter than indicated in this chart.
7. Curves applies from -20°C to +50°C ambient. Temperatures above +85°C will cause over temperature trip.
8. This curve is for 50Hz, 60Hz applications.
9. The total clearing times shown include the response time for trip unit, the breaker opening and the interruption of the current.

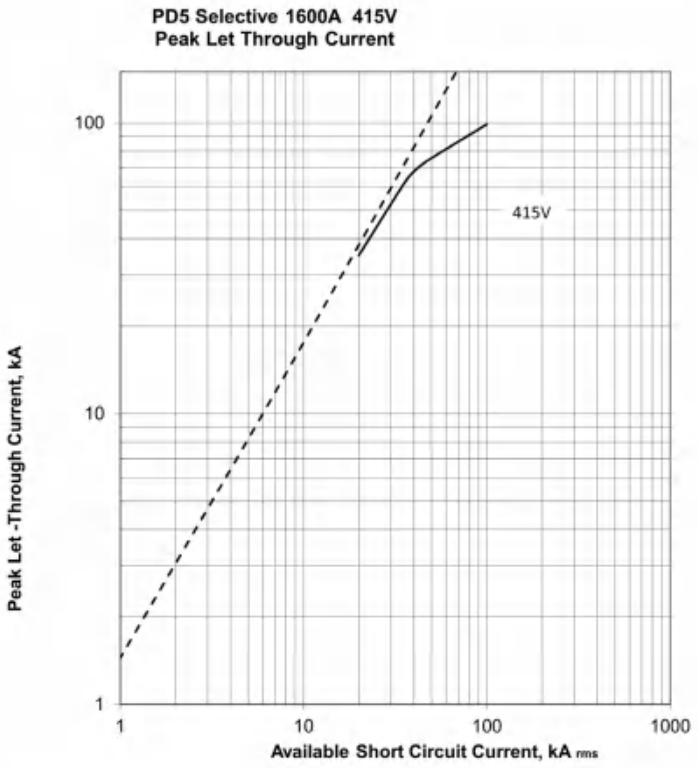
PD5 Selective 1600A 415V
Peak Let Through Current
Peak Let -Through Current, kA
100
10
1
415V
1
10
100
1000
Available Short Circuit Current, kA rms

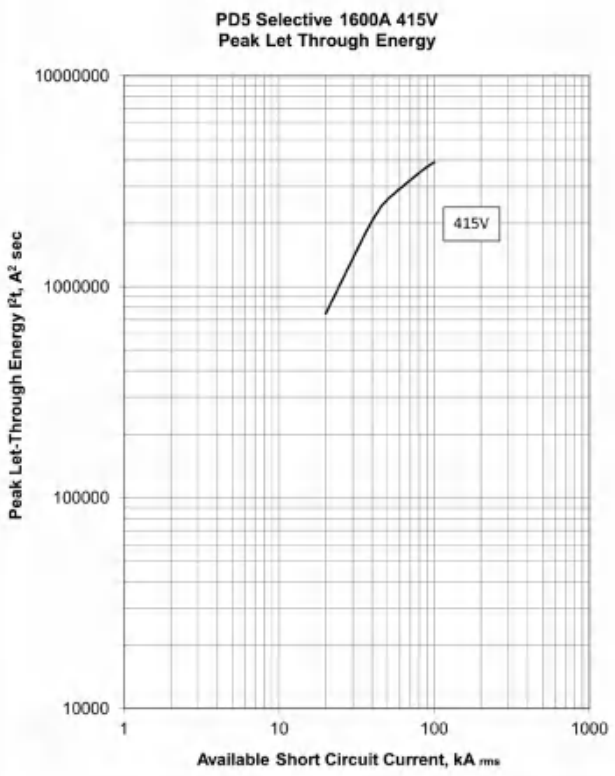
PD5 Selective 1600A 415V
Peak Let Through Energy
Peak Let-Through Energy I²t, A² sec
10000000
1000000
100000
10000
415V
1
10
100
1000
Available Short Circuit Current, kA rms

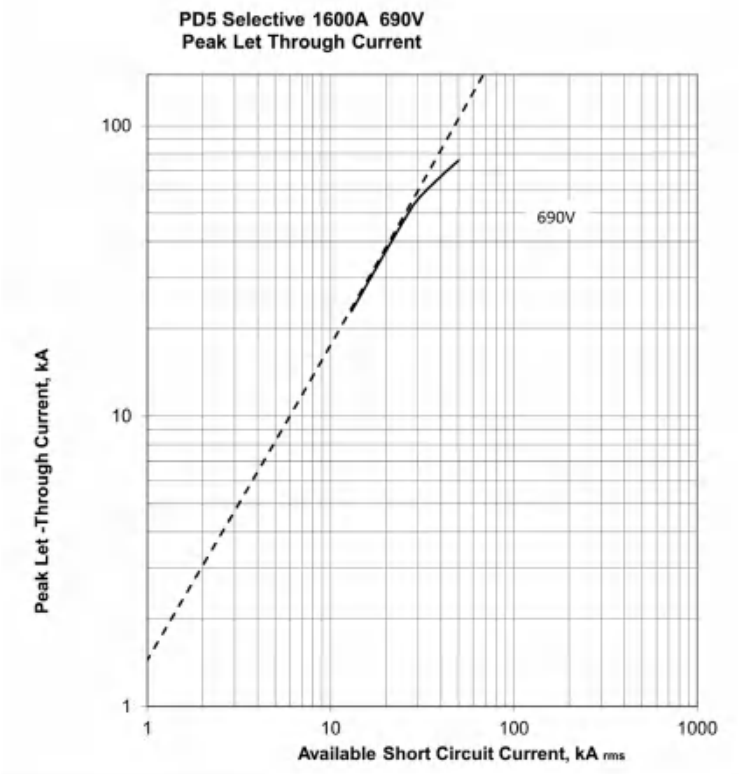
PD5 Selective 1600A 690V
Peak Let Through Current
100
10
1
690V
Peak Let -Through Current, kA
1
10
100
1000
Available Short Circuit Current, kA rms

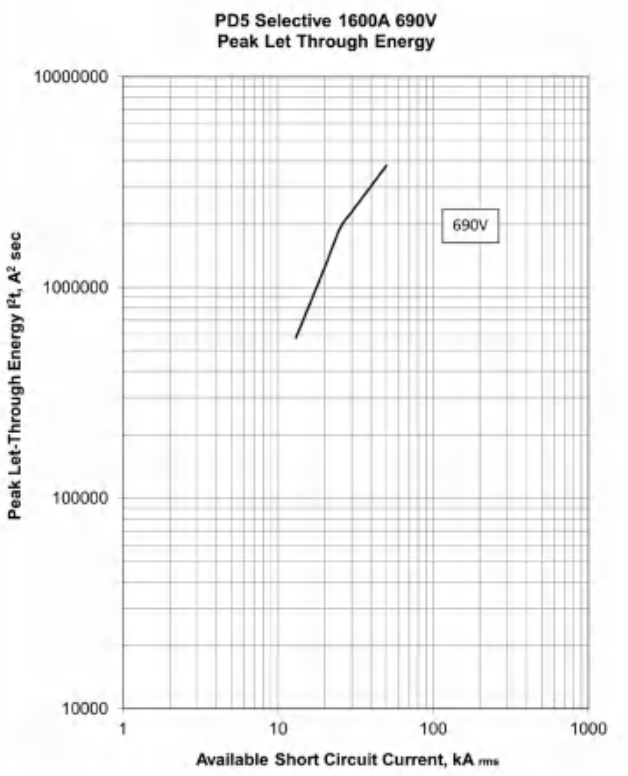
PD5 Selective 1600A 690V
Peak Let Through Energy
10000000
1000000
100000
10000
690V
Peak Let-Through Energy I²t, A² sec
1
10
100
1000
Available Short Circuit Current, kA rms

Power Defense Molded Case Circuit Breaker
Selective Protection (PDC, NZM, FAZ)

Selective Protection between Incoming Circuit Breaker PDC ... and Outgoing Circuit Breaker FAZ-B(C) ... PKZ ... PDC ... NZM ...

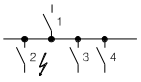

Incoming circuit breaker

Outgoing circuit breaker

Selectivity 415 V AC
Between circuit-breakers it enables the separate disconnection of faulty system sections. Selectivity exists between incoming circuit breaker 1 and outgoing circuit-breaker 2 if, only outgoing breaker 2 trips at position 2 during a short-circuit. System sections 3 and 4 remain operational.

	Nr of entries	Upstream		PDC1 A-A TMTU I_{cu} = 25 (36) kA							PDC2 A-A TMTU I_{cu} = 70kA			
			I_n [A]	16-40	50	63	80	100	125	160	125	160	200	250
			II(I_{cu})											
MCBs	**FAZ -B/C**	**I_n [A]**	**I_{cu} (415V)**											
FAZ All types with characteristic B, C 15 - 25kA	FAZ -B/C	0.5		T	T	T	T	T	T	T	T	T	T	T
	FAZ -B/C	1		T	T	T	T	T	T	T	T	T	T	T
	FAZ -B/C	1.5		2	T	T	T	T	T	T	T	T	T	T
	FAZ -B/C	2		1.2	2	3	3	10	T	T	T	T	T	T
	FAZ -B/C	2.5		1.2	2	3	3	8	T	T	T	T	T	T
	FAZ -B/C	3		1.2	2	2.5	3	5	10	10	T	T	T	T
	FAZ -B/C	3.5		1.2	1.5	2	2	4	10	10	T	T	T	T
	FAZ -B/C	4		1	1.5	2	2	4	10	10	T	T	T	T
	FAZ -B/C	5		1	1.2	1.5	2	3	8	8	12.5	T	T	T
	FAZ -B/C	6		0.8	1.2	1.5	1.5	3	8	8	11	13	T	T
	FAZ -B/C	8		0.7	1.2	1.5	1.5	3	7	7	11	13	T	T
	FAZ -B/C	10		-	1.2	1	1.5	2	6	6	7.5	10	12.5	T
	FAZ -B/C	13		-	-	1	1.5	2	5	5	7.5	9	12	T
	FAZ -B/C	16		-	-	-	1.2	1.5	4	4	7.5		10	T
	FAZ -B/C	20		-	-	-	-	1.5	3	3	5		7.5	T
FAZ -D	**FAZ -D**	**25**												
FAZ All types with Characteristic D	v	32		9	T	T	T	T	T	T	T	T	T	T
	FAZ -D	40		0.5	0.7	1.1	1.9	4.2	T	T	T	T	T	T
	FAZ -D	1.5		0.3	0.6	0.8	1.1	1.6	2.6	2.6	T	T	T	T
	FAZ -D	2		0.3	0.5	0.75	0.95	1.4	2.4	2.4	T	T	T	T
	FAZ -D	2.5		0.3	0.5	0.75	0.95	1.3	2.3	2.3	T	T	T	T
	FAZ -D	3		0.3	0.5	0.7	0.9	1.3	2.1	2.1	T	T	T	T
	FAZ -D	3.5		0.3	0.5	0.7	0.9	1.3	2	2	T	T	T	T
	FAZ -D	4		0.3	0.5	0.7	0.9	1.3	1.9	1.9	T	T	T	T
	FAZ -D	5		0.3	0.5	0.7	0.9	1.3	1.9	1.9	T	T	T	T
	FAZ -D	6		0.3	0.5	0.6	0.9	1.3	1.8	1.8	T	T	T	T
	FAZ -D	8		0.3	0.3	0.6	0.75	1	1.3	1.3	T	T	T	T
	FAZ -D	10		0.3	0.3	0.6	0.75	0.95	1.2	1.2	T	T	T	T
	FAZ -D	13		0.3	0.3	0.5	0.7	0.9	1.1	1.1	T	T	T	T
	FAZ -D	16		-	0.3	0.5	0.65	0.8	1.1	1.1	12	T	T	T
	FAZ -D	20		-	-	0.5	0.65	0.8	1.1	1.1	10	12	T	T
	FAZ -D	25		-	-	0.5	0.65	0.8	1.1	1.1	10	12	T	T
	FAZ -D	32		-	-	-	-	0.8	1.1	1.1	6	8	11	T
	FAZ -D	40		-	-	-	-	-	1	1	6	8	11	T
PDC breakers	**FAZ -D**	**25**												
PDC1 A-A	PDC1 A-A	16-40		-		0.5	0.7	0.8	1.5	1.5	1.5	1.5	2	3
	PDC1 A-A	50		-		-	0.6	0.8	1.5	1.5	1.5	1.5	2	3
	PDC1 A-A	63		-		-	-	0.8	1.5	1.5	1.5	1.5	2	3
	PDC1 A-A	80		-		-	-	-	1.5	1.5	1.5	1.5	2	3
	PDC1 A-A	100		-		-	-	-	-	1.5	-	1.5	2	3
	PDC1 A-A	125		-		-	-	-	-	-	-	-	2	3
	PDC1 A-A	160		-		-	-	-	-	-	-	-	2	3

PDC2 PXR				PDC3 A-A TMTU I_{cu} = 70kA				PDC3 PXR I_{cu} = 70kA	PDC4 A-A TMTU I_{cu} = 70kA	PDC4 PXR I_{cu} = 70kA	PDC5 PXR I_{cu} = 100kA				
63	**160**	**200**	**250**	**250**	**400**	**500**	**630**	**630**	**800**	**800**	**630**	**800**	**1000**	**1250**	**1600**
T	T	T	T	T	T	T	T	T	T	T	T	T	T	T	T
T	T	T	T	T	T	T	T	T	T	T	T	T	T	T	T
6	T	T	T	T	T	T	T	T	T	T	T	T	T	T	T
2	T	T	T	T	T	T	T	T	T	T	T	T	T	T	T
1.5		14.1	14.1	T	T	T	T	T	T	T	T	T	T	T	T
1.4		7.4	7.4	T	T	T	T	T	T	T	T	T	T	T	T
1.4		5	5	T	T	T	T	T	T	T	T	T	T	T	T
1.3		4.8	4.8	T	T	T	T	T	T	T	T	T	T	T	T
1.3		4.6	4.6	T	T	T	T	T	T	T	T	T	T	T	T
1.3		4.4	4.4	T	T	T	T	T	T	T	T	T	T	T	T
1.3		4.2	4.2	T	T	T	T	T	T	T	T	T	T	T	T
1.2		3.9	3.9	T	T	T	T	T	T	T	T	T	T	T	T
1.2		3.8	3.8	T	T	T	T	T	T	T	T	T	T	T	T
1.1		3.5	3.5	T	T	T	T	T	T	T	T	T	T	T	T
-	3.1	3.1	3.1	T	T	T	T	T	T	T	T	T	T	T	T
T	T	T	T	T	T	T	T	T	T	T	T	T	T	T	T
T	T	T	T	T	T	T	T	T	T	T	T	T	T	T	T
3.2	T	T	T	T	T	T	T	T	T	T	T	T	T	T	T
3	T	T	T	T	T	T	T	T	T	T	T	T	T	T	T
2.9	T	T	T	T	T	T	T	T	T	T	T	T	T	T	T
2.6	T	T	T	T	T	T	T	T	T	T	T	T	T	T	T
2.4	T	T	T	T	T	T	T	T	T	T	T	T	T	T	T
2.3		11.3	11.3	T	T	T	T	T	T	T	T	T	T	T	T
2.3		10.4	10.4	T	T	T	T	T	T	T	T	T	T	T	T
2.1	6	6	6	T	T	T	T	T	T	T	T	T	T	T	T
1.4		5.4	5.4	T	T	T	T	T	T	T	T	T	T	T	T
1.3		5.1	5.1	T	T	T	T	T	T	T	T	T	T	T	T
1.2		4.5	4.5	T	T	T	T	T	T	T	T	T	T	T	T
1.2		4.1	4.1	T	T	T	T	T	T	T	T	T	T	T	T
1.2		3.9	3.9	T	T	T	T	T	T	T	T	T	T	T	T
1.2		3.8	3.8	T	T	T	T	T	T	T	T	T	T	T	T
1.2		3.6	3.6	T	T	T	T	T	T	T	T	T	T	T	T
1.1		3.4	3.4	T	T	T	T	T	T	T	T	T	T	T	T
0.6	5	5	7.5	11	20	20	20	25	T	T	T	T	T	T	T
-	5	5	7.5	11	20	20	20	25	T	T	T	T	T	T	T
-	5	5	6.0	11	20	20	20	25	T	T	T	T	T	T	T
-	5	5	6.0	11	20	20	20	25	T	T	T	T	T	T	T
-	5	5	6.0	11	20	20	20	25	T	T	T	T	T	T	T
-	5	5	6.0	11	20	20	20	25	T	T	T	T	T	T	T
-	5	5	6.0	11	20	20	20	25	T	T	T	T	T	T	T

Selective Protection between Incoming Circuit Breaker PDC ... and Outgoing Circuit Breaker FAZ-B(C) ... PKZ ... PDC ... NZM ... (Continued)

	Nr of entries	Upstream		PDC1 A-A TMTU I_{cu} = 25 (36) kA							PDC2 A-A TMTU I_{cu} = 70kA			
			I_n [A]	16-40	50	63	80	100	125	160	125	160	200	250
			II(I_{cu})											
PDC2 A-A TMTU	**PDC2 A-A**													
PDC2 A-A	PDC2 A-A	125	70	-	-	-	-	-	-	-	-	-	2.2	2.6
	PDC2 A-A	160	70	-	-	-	-	-	-	-	-	-	-	2.5
	PDC2 A-A	200	70	-	-	-	-	-	-	-	-	-	-	-
	PDC2 A-A	250	70	-	-	-	-	-	-	-	-	-	-	-
PDC2 PXR	**PDC2 PXR**													
PDC2 PXR	PDC2 PXR	63	70	-	-	-	-	-	-	-	1.7	2.1	2.4	2.6
	PDC2 PXR	160	70	-	-	-	-	-	-	-	-		-	2.5
	PDC2 PXR	200	70	-	-	-	-	-	-	-	-	-	-	-
	PDC2 PXR	250	70	-	-	-	-	-	-	-	-	-	-	-
PDC3 A-A TMTU	**PDC3 A-A**													
PDC3 A-A	PDC3 A-A	250	70	-	-	-	-	-	-	-	-	-	-	-
	PDC3 A-A	400	70	-	-	-	-	-	-	-	-	-	-	-
	PDC3 A-A	500	70	-	-	-	-	-	-	-	-	-	-	-
	PDC3 A-A	630	70	-	-	-	-	-	-	-	-	-	-	-
PDC3 PXR	**PDC3 PXR**													
PDC3 PXR	PDC3 PXR	630	70	-	-	-	-	-	-	-	-	-	-	-
PDC4 A-A TMTU	**PDC4 A-A**													
PDC4 A-A	PDC4 A-A	800	70	-	-	-	-	-	-	-	-	-	-	-
PDC4 PXR	**PDC4 PXR**													
PDC4 PXR	PDC4 PXR	800	70	-	-	-	-	-	-	-	-	-	-	-
PDC5 PXR	**PDC5 PXR**													
PDC5 PXR	PDC5 PXR	630	100	-	-	-	-	-	-	-	-	-	-	-
	PDC5 PXR	800	100	-	-	-	-	-	-	-	-	-	-	-
	PDC5 PXR	1000	100	-	-	-	-	-	-	-	-	-	-	-
	PDC5 PXR	1250	100	-	-	-	-	-	-	-	-	-	-	-
	PDC5 PXR	1600	100	-	-	-	-	-	-	-	-	-	-	-
NZM breakers	**NZM ... 1-A**													
NZM ... 1-A	NZM ... 1-A	20-40	25 - 100	-	-	0.5	0.7	0.8	1.5	1.5	2	2.4	2.5	3.1
	NZM ... 1-A	50	25 - 100	-	-	-	0.6	0.8	1.5	1.5	2	2.4	2.5	3.1
	NZM ... 1-A	63	25 - 100	-	-	-	-	0.8	1.5	1.5	1.9	2.3	2.6	3.1
	NZM ... 1-A	80	25 - 100	-	-	-	-	-	1.5	1.5	1.9	2.3	2.6	3
	NZM ... 1-A	100	25 - 100	-	-	-	-	-	-	1.5	-	2.2	2.6	3
	NZM ... 1-A	125	25 - 100	-	-	-	-	-	-	-	-	-	2.6	3
	NZM ... 1-A	160	25 - 100	-	-	-	-	-	-	-	-	-	2.6	3
NZM ... 1-M	**NZM ... 1-M**													
NZM ... 1-M	NZM ... 1-M	40	25 - 50	-	-	-	-	0.8	1	1	2	2.4	2.7	3.1
	NZM ... 1-M	50	25 - 50	-	-	-	-	-	-	1	1.9	2.3	2.6	3
	NZM ... 1-M	63	25 - 50	-	-	-	-	-	-	1	1.9	2.3	2.6	3
	NZM ... 1-M	80	25 - 50	-	-	-	-	-	-	-	1.8	2.2	2.6	3
	NZM ... 1-M	100	25 - 50	-	-	-	-	-	-	-	-	2.2	2.6	3
NZM ... 2-A	**NZM ... 2-A**													
NZM ... 2-A	NZM ... 2-A	20-40	25 - 150	-	-	0.5	0.6	0.8	1	1	1.9	2.3	2.5	3
	NZM ... 2-A	50	25 - 150	-	-	-	0.6	0.8	1	1	1.9	2.3	2.5	3
	NZM ... 2-A	63	25 - 150	-	-	-	-	0.8	1	1	1.9	2.2	2.5	2.9
	NZM ... 2-A	80	25 - 150	-	-	-	-	-	1	1	1.9	2.2	2.5	2.9
	NZM ... 2-A	100	25 - 150	-	-	-	-	-	-	1	-	2.2	2.5	2.7
	NZM ... 2-A	125	25 - 150	-	-	-	-	-	-	-	-	-	2.3	2.7
	NZM ... 2-A	160	25 - 150	-	-	-	-	-	-	-	-	-	-	2.5
	NZM ... 2-A	200	25 - 150	-	-	-	-	-	-	-	-	-	-	2.5
	NZM ... 2-A	250	25 - 150	-	-	-	-	-	-	-	-	-	-	-

PDC2 PXR				PDC3 A-A TMTU I_{cu} = 70kA				PDC3 PXR I_{cu} = 70kA	PDC4 A-A TMTU I_{cu} = 70kA	PDC4 PXR I_{cu} = 70kA	PDC5 PXR I_{cu} = 100kA				
63	160	200	250	250	400	500	630	630	800	800	630	800	1000	1250	1600
-	-	2.7	2.7	3.2	5.4	9.8	16.6	16.6	7.2	7.2	20	20	50	T	T
-	-	-	2.4	3.2	5.4	9.8	16.6	16.6	7.2	7.2	20	20	50	T	T
-	-	-	-	-	5.4	9.8	15.5	15.5	7.1	7.1	20	20	50	T	T
-	-	-	-	-	5.4	9.8	13.3	13.3	7.1	7.1	20	20	50	T	T
-	2.4	2.7	3	3.7	6	9.6	16.6	16.6	7	7	20	20	50	T	T
-	-	2.7	3	3.4	5.6	9.3	13.8	13.8	6.9	6.9	20	20	50	T	T
-	-	-	-	-	5.5	9.2	13.6	13.6	6.8	6.8	20	20	50	T	T
-	-	-	-	-	5.5	9.2	13.5	13.5	6.8	6.8	20	20	50	T	T
-	-	-	-	-	4.3	5.7	6.7	6.7	6	6	20	20	50	T	T
-	-	-	-	-5.6			6.6	6.6	6	6	20	20	50	T	T
-	-	-	-	-	-	-	6.4	6.4	6	6	20	20	50	T	T
-	-	-	-	-	-	-	-	-	-	-	20	20	50	T	T
-	-	-	-	-	-	-	20	20	50	-	20	20	50	T	T
-	-	-	-	-	-	-	-	-	-	-	-	-	-	20	20
-	-	-	-	-	-	-	-	-	-	-	-	-	-	20	20
-	-	-	-	-	-	-	-	-	-	-	-	10	15	20	20
-	-	-	-	-	-	-	-	-	-	-	-	-	-	20	20
-	-	-	-	-	-	-	-	-	-	-	-	-	-	20	20
-	-	-	-	-	-	-	-	-	-	-	-	-	-	-	20
-	-	-	-	-	-	-	-	-	-	-	-	-	-	-	-
1.1	2.6	2.6	2.6	6	13.7	50	T	T	10	10	T	T	T	T	T
-	2.6	2.6	2.6	6	13.1	47.4	T	T	10	10	T	T	T	T	T
-	2.6	2.6	2.6	6	11.8	43.5	T	T	10	10	T	T	T	T	T
-	2.6	2.6	2.6	6	11.2	41.3	T	T	10	10	T	T	T	T	T
-	2.6	2.6	2.6	6	10.9	40.4	T	T	10	10	T	T	T	T	T
-	2.6	2.6	2.6	6	10.7	39.3	T	T	10	10	T	T	T	T	T
-	-	2.6	2.6	6	10.5	38.5	T	T	10	10	T	T	T	T	T
1.1	2.7	2.7	2.7	6	13.9	50	T	T	10.4	10.4	T	T	T	T	T
-	2.6	2.6	2.6	6	13.1	47.4	T	T	10	10	T	T	T	T	T
-	2.6	2.6	2.6	6	12.2	43.4	T	T	10	10	T	T	T	T	T
-	2.6	2.6	2.6	6	12.3	41.3	T	T	10	10	T	T	T	T	T
-	2.6	2.6	2.6	6	12.2	40.4	T	T	10	10	T	T	T	T	T
1	2.4	2.4	2.4	5.7	T	T	T	T	11.9	11.9	T	T	T	T	T
-	2.4	2.4	2.4	5.8	T	T	T	T	10.4	10.4	T	T	T	T	T
-	2.4	2.4	2.4	5.8	28.6	T	T	T	10.4	10.4	T	T	T	T	T
-	2.4	2.4	2.4	5.9	26.5	T	T	T	10	10	T	T	T	T	T
-	2.4	2.4	2.4	5.7	24.5	T	T	T	10	10	T	T	T	T	T
-	-	2.4	2.4	4.5	14.1	T	T	T	10	10	T	T	T	T	T
-	-	-	2.4	4.6	16.6	T	T	T	10	10	T	T	T	T	T
-	-	-	-	4.4	10	T	T	T	10	10	T	T	T	T	T
-	-	-	-	-	10	T	T	T	10	10	T	T	T	T	T

Selective Protection between Incoming Circuit Breaker PDC ... and Outgoing Circuit Breaker FAZ-B(C) ... PKZ ... PDC ... NZM ... (Continued)

	Nr of entries	Upstream		PDC1 A-A TMTU I_{cu} = 25 (36) kA							PDC2 A-A TMTU I_{cu} = 70kA			
			I_n [A]	16-40	50	63	80	100	125	160	125	160	200	250
			II(I_{cu})											
NZM ... 2-M	**NZM ... 2-M**													
NZM ... 2-M ...	NZM ... 2-M	20-120	25 - 150	-	-	-	-	-	-	-	-	1.9	2.2	2.7
	NZM ... 2-M	160	25 - 150	-	-	-	-	-	-	-	-	-	-	2.5
	NZM ... 2-M	200	25 - 150	-	-	-	-	-	-	-	-	-	-	2.5
NZM ... 2-VE	**NZM ... 2-VE**													
NZM ... 2-VE	NZM ... 2-VE	100	50 - 150	-	-	-	-	-	-	-	-	2	2.2	2.7
	NZM ... 2-VE	160	50 - 150	-	-	-	-	-	-	-	-	-	-	2.7
	NZM ... 2-VE	250	50 - 150	-	-	-	-	-	-	-	-	-	-	-
NZM ... 2-ME	**NZM ... 2-ME**													
NZM ... 2-ME	NZM ... 2-ME	90	50 - 150	-	-	-	-	-	-	-	-	2.1	2.3	2.7
	NZM ... 2-ME	140	50 - 150	-	-	-	-	-	-	-	-	-	-	2.7
	NZM ... 2-ME	220	50 - 150	-	-	-	-	-	-	-	-	-	-	-
NZM ... 3-A	**NZM ... 3-A**													
NZM ... 3-A (thermal-mag)	NZM ... 3-A	320	50 - 150	-	-	-	-	-	-	-	-	-	-	-
	NZM ... 3-A	400	50 - 150	-	-	-	-	-	-	-	-	-	-	-
	NZM ... 3-A	500	50 - 150	-	-	-	-	-	-	-	-	-	-	-
NZM ... 3-AE	**NZM ... 3-AE**													
NZM ... 3-AE	NZM ... 3-AE	250	50 - 150	-	-	-	-	-	-	-	-	-	-	-
	NZM ... 3-AE	400	50 - 150	-	-	-	-	-	-	-	-	-	-	-
	NZM ... 3-AE	630	50 - 150	-	-	-	-	-	-	-	-	-	-	-
NZM ... 3-VE	**NZM ... 3-VE**													
NZM ... 3-VE	NZM ... 3-VE	250	50 - 150	-	-	-	-	-	-	-	-	-	-	-
	NZM ... 3-VE	400	50 - 150	-	-	-	-	-	-	-	-	-	-	-
	NZM ... 3-VE	630	50 - 150	-	-	-	-	-	-	-	-	-	-	-
NZM ... 3-ME	**NZM ... 3-ME**													
NZM ... 3-ME	NZM ... 3-ME	220	50 - 150	-	-	-	-	-	-	-	-	-	-	-
	NZM ... 3-ME	350	50 - 150	-	-	-	-	-	-	-	-	-	-	-
	NZM ... 3-ME	450	50 - 150	-	-	-	-	-	-	-	-	-	-	-
NZM ... 4-AE	**NZM ... 4-AE**													
NZM ... 4-AE	NZM ... 4-AE	630	50 - 85	-	-	-	-	-	-	-	-	-	-	-
	NZM ... 4-AE	800	50 - 85	-	-	-	-	-	-	-	-	-	-	-
	NZM ... 4-AE	1000	50 - 85	-	-	-	-	-	-	-	-	-	-	-
	NZM ... 4-AE	1250	50 - 85	-	-	-	-	-	-	-	-	-	-	-
	NZM ... 4-AE	1600	50 - 85	-	-	-	-	-	-	-	-	-	-	-
NZM ... 4-VE	**NZM ... 4-VE**													
NZM ... 4-VE	NZM ... 4-VE	630	50 - 85	-	-	-	-	-	-	-	-	-	-	-
	NZM ... 4-VE	800	50 - 85	-	-	-	-	-	-	-	-	-	-	-
	NZM ... 4-VE	1000	50 - 85	-	-	-	-	-	-	-	-	-	-	-
	NZM ... 4-VE	1250	50 - 85	-	-	-	-	-	-	-	-	-	-	-
	NZM ... 4-VE	1600	50 - 85	-	-	-	-	-	-	-	-	-	-	-
NZM ... 4-ME	**NZM ... 4-ME**													
NZM ... 4-ME	NZM ... 4-ME	550	50 - 85	-	-	-	-	-	-	-	-	-	-	-
	NZM ... 4-ME	875	50 - 85	-	-	-	-	-	-	-	-	-	-	-
	NZM ... 4-ME	1400	50 - 85	-	-	-	-	-	-	-	-	-	-	-

PDC2 PXR				PDC3 A-A TMTU I_{cu} = 70kA				PDC3 PXR I_{cu} = 70kA	PDC4 A-A TMTU I_{cu} = 70kA	PDC4 PXR I_{cu} = 70kA	PDC5 PXR I_{cu} =100kA				
63	160	200	250	250	400	500	630	630	800	800	630	800	1000	1250	1600
-	2.4	2.4	2.4	5.9	35.9	T	T	T	11.6	10	20	20	50	T	T
-	-	2.4	2.4	4.4	10	T	T	T	10	10	20	20	50	T	T
-	-	-	-	2.8	10	T	T	T	10	10	20	20	50	T	T
-	2.4	2.7	3	4.3	10	T	T	T	10	10	20	20	50	T	T
-	-	2.7	3	4.2	10	T	T	T	10	10	20	20	50	T	T
-	-	-	-	-	10	T	T	T	10	10	20	20	50	T	T
-	2.4	2.4	2.4	4.3	10	T	T	T	10	10	T	T	T	T	T
-	-	2.4	2.4	4.2	10	T	T	T	10	10	T	T	T	T	T
-	-	-	-	2.8	10	T	T	T	10	10	T	T	T	T	T
-	-	-	-	-	5.4	7.2	10	10	6.2	6.2	T	T	T	T	T
-	-	-	-	-	-	6.9	10	10	6.2	6.2	T	T	T	T	T
-	-	-	-	-	-	-	-	-	6.2	6.2	T	T	T	T	T
-	-	-	-	-	5.4	7	10	10	6	6.2	T	T	T	T	T
-	-	-	-	-	-	-	10	10	6	6.2	T	T	T	T	T
-	-	-	-	-	-	-	-	-	-	-	-	T	T	T	T
-	-	-	-	-	5.3	7.1	10	10	6	6.2	T	T	T	T	T
-	-	-	-	-	-	-	10	10	6.1	6.2	T	T	T	T	T
-	-	-	-	-	-	-	-	-	6	6.2	-	T	T	T	T
-	-	-	-	2.8	4.5	6.5	10	10	6	6.2	T	T	T	T	T
-	-	-	-	-	4.3	6.5	10	10	6	6.2	T	T	T	T	T
-	-	-	-	-	-	-	10	-	6	6.2	-	T	T	T	T
-	-	-	-	-	-	-	-	-	6.4	6.4	-	10	15	20	20
-	-	-	-	-	-	-	-	-	-	-	-	-	-	20	20
-	-	-	-	-	-	-	-	-	-	-	-	-	-	20	20
-	-	-	-	-	-	-	-	-	-	-	-	-	-	-	20
-	-	-	-	-	-	-	-	-	-	-	-	-	-	-	-
-	-	-	-	-	-	-	-	-	6.4	6.4	-	10	15	20	20
-	-	-	-	-	-	-	-	-	-	-	-	-	-	20	20
-	-	-	-	-	-	-	-	-	-	-	-	-	-	20	20
-	-	-	-	-	-	-	-	-	-	-	-	-	-	-	20
-	-	-	-	-	-	-	-	-	-	-	-	-	-	-	-
-	-	-	-	-	-	-	-	-	6.4	6.4	-	-	-	20	20
-	-	-	-	-	-	-	-	-	-	-	-	-	-	-	20
-	-	-	-	-	-	-	-	-	-	-	-	-	-	-	-

Selective Protection

		Upstream	PDC1 I_n = ... 160 A				PDC2 A-A TMTU I_n = ... 250 A				PDC2 PXR I_n = ... 250 A			
		I_{cu} (415 V)	25kA	36kA	50kA	70kA	25kA	36kA	50kA	70kA	25kA	36kA	50kA	70kA
Downstream	I_{cu}(415 V) [kA]	I_n [A]												
PDC1	25	... 160	25	36	50	70	25	36	50	70	25	36	50	70
PDC1	36	... 160	-	36	50	70	-	36	50	70	-	36	50	70
PDC1	50	... 160	-	-	50	70	-	-	50	70	-	-	50	70
PDC1	70	... 160	-	-	-	70	-	-	-	70	-	-	-	70
PDC2 A-A	25	... 250	-	36	50	70	25	36	50	70	25	36	50	70
PDC2 A-A	36	... 250	-	-	50	70	-	36	50	70	-	36	50	70
PDC2 A-A	50	... 250	-	-	-	70	-	-	50	70	-	-	50	70
PDC2 A-A	70	... 250	-	-	-	-	-	-	-	70	-	-	-	70
PDC2 PXR	25	... 250	-	36	50	70	25	36	50	70	25	36	50	70
PDC2 PXR	36	... 250	-	-	50	70	-	36	50	70	-	36	50	70
PDC2 PXR	50	... 250	-	-	-	70	-	-	50	70	-	-	50	70
PDC2 PXR	70	... 250	-	-	-	-	-	-	-	70	-	-	-	70
PDC3 A-A	25	... 630	-	-	-	-	-	-	-	-	-	-	-	-
PDC3 A-A	36	... 630	-	-	-	-	-	-	-	-	-	-	-	-
PDC3 A-A	50	... 630	-	-	-	-	-	-	-	-	-	-	-	-
PDC3 A-A	70	... 630	-	-	-	-	-	-	-	-	-	-	-	-
PDC3 PXR	25	... 630	-	-	-	-	-	-	-	-	-	-	-	-
PDC3 PXR	36	... 630	-	-	-	-	-	-	-	-	-	-	-	-
PDC3 PXR	50	... 630	-	-	-	-	-	-	-	-	-	-	-	-
PDC3 PXR	70	... 630	-	-	-	-	-	-	-	-	-	-	-	-
PDC4 A-A	36	... 800	-	-	-	-	-	-	-	-	-	-	-	-
PDC4 A-A	50	... 800	-	-	-	-	-	-	-	-	-	-	-	-
PDC4 A-A	70	... 800	-	-	-	-	-	-	-	-	-	-	-	-
PDC4 PXR	36	... 800	-	-	-	-	-	-	-	-	-	-	-	-
PDC4 PXR	50	... 800	-	-	-	-	-	-	-	-	-	-	-	-
PDC4 PXR	70	... 800	-	-	-	-	-	-	-	-	-	-	-	-
PDC5 PXR	50	... 1600	-	-	-	-	-	-	-	-	-	-	-	-
PDC5 PXR	85	... 1600	-	-	-	-	-	-	-	-	-	-	-	-
PDC5 PXR	100	... 1600	-	-	-	-	-	-	-	-	-	-	-	-

PDC3 A-A TMTU I_n = ... 630 A				PDC3 PXR I_n = ... 630 A				PDC4 A-A TMTU I_n = ... 800 A			PDC4 PXR I_n = ... 800 A		
25kA	36kA	50kA	70kA	25kA	36kA	50kA	70kA	36kA	50kA	70kA	36kA	50kA	70kA
25	27	27	27	25	36	40	40	36	38	38	36	38	38
-	36	39	39	-	36	40	40	36	38	38	36	38	38
-	-	50	57	-	-	50	70	-	50	70	-	50	70
-	-	-	70	-	-	-	70	-	-	70	-	-	70
25	28	28	28	25	36	44	44	36	50	70	36	50	70
-	36	44	44	-	36	44	44	36	50	70	36	50	70
-	-	50	63	-	-	50	70	-	50	70	-	50	70
-	-	-	70	-	-	-	70	-	-	70	-	-	70
25	28	28	28	25	36	45	45	36	50	70	36	50	70
-	36	44	44	-	36	45	45	36	50	70	36	50	70
-	-	50	63	-	-	50	70	-	50	70	-	50	70
-	-	-	70	-	-	-	70	-	-	70	-	-	70
25	36	50	70	25	36	50	70	36	50	55	36	50	55
-	36	50	70	-	36	50	70	36	50	55	36	50	55
-	-	50	70	-	-	50	70	-	50	70	-	50	70
-	-	-	70	-	-	-	70	-	-	70	-	-	70
25	36	50	70	25	36	50	70	36	50	55	36	50	55
-	36	50	70	-	36	50	70	36	50	55	36	50	55
-	-	50	70	-	-	50	70	-	50	70	-	50	70
-	-	-	70	-	-	-	70	-	-	70	-	-	70
-	-	-	-	-	-	-	-	36	50	70	36	50	70
-	-	-	-	-	-	-	-	-	50	70	-	50	70
-	-	-	-	-	-	-	-	-	-	70	-	-	70
-	-	-	-	-	-	-	-	36	50	70	36	50	70
-	-	-	-	-	-	-	-	-	50	70	-	50	70
-	-	-	-	-	-	-	-	-	-	70	-	-	70
-	-	-	-	-	-	-	-	-	-	-	-	-	-
-	-	-	-	-	-	-	-	-	-	-	-	-	-
-	-	-	-	-	-	-	-	-	-	-	-	-	-

Selective Protection

	Nr of entries	Upstream		NZM1 A							NZM2-A (25-150kA)		
			I_n [A]	20 - 40	50	63	80	100	125	160	20 - 40	50	63
			II(I_{cu})										
PDC breakers	**PDC1 A-A**												
PDC1 A-A	PDC1 A-A	16-40	70	-	-	0.5	0.7	0.8	1.5	1.5	-	-	0.6
	PDC1 A-A	50	70	-	-	-	0.6	0.8	1.5	1.5	-	-	-
	PDC1 A-A	63	70	-	-	-	-	0.8	1.5	1.5	-	-	-
	PDC1 A-A	80	70	-	-	-	-	-	1.5	1.5	-	-	-
	PDC1 A-A	100	70	-	-	-	-	-	-	1.5	-	-	-
	PDC1 A-A	125	70	-	-	-	-	-	-	-	-	-	-
	PDC1 A-A	160	70	-	-	-	-	-	-	-	-	-	-
PDC2 A-A TMTU	**PDC2 A-A**												
PDC2 A-A TMTU	PDC2 A-A	125	70	-	-	-	-	-	-	-	-	-	-
	PDC2 A-A	160	70	-	-	-	-	-	-	-	-	-	-
	PDC2 A-A	200	70	-	-	-	-	-	-	-	-	-	-
	PDC2 A-A	250	70	-	-	-	-	-	-	-	-	-	-
PDC2 PXR	**PDC2 PXR**												
PDC2 PXR	PDC2 PXR	63	70	-	-	-	-				-	-	-
	PDC2 PXR	160	70	-	-	-	-	-	-	-	-	-	-
	PDC2 PXR	200	70	-	-	-	-	-	-	-	-	-	-
	PDC2 PXR	250	70	-	-	-	-	-	-	-	-	-	-
PDC3 A-A TMTU	**PDC3 A-A**												
PDC3 A-A TMTU	PDC3 A-A	250	70	-	-	-	-	-	-	-	-	-	-
	PDC3 A-A	400	70	-	-	-	-	-	-	-	-	-	-
	PDC3 A-A	500	70	-	-	-	-	-	-	-	-	-	-
	PDC3 A-A	630	70	-	-	-	-	-	-	-	-	-	-
PDC3 PXR	**PDC3 PXR**												
PDC3 PXR	PDC3 PXR	630	70	-	-	-	-	-	-	-	-	-	-
PDC4 A-A TMTU	**PDC4 A-A**												
PDC4 A-A TMTU	PDC4 A-A	800	70	-	-	-	-	-	-	-	-	-	-
PDC4 PXR	**PDC4 PXR**												
PDC4 PXR	PDC4 PXR	800	70	-	-	-	-	-	-	-	-	-	-
PDC5 PXR	**PDC5 PXR**												
PDC5 PXR	PDC5 PXR	630	100	-	-	-	-	-	-	-	-	-	-
	PDC5 PXR	800	100	-	-	-	-	-	-	-	-	-	-
	PDC5 PXR	1000	100	-	-	-	-	-	-	-	-	-	-
	PDC5 PXR	1250	100	-	-	-	-	-	-	-	-	-	-
	PDC5 PXR	1600	100	-	-	-	-	-	-	-	-	-	-

NZM2-A (25-150kA)						NZM2-VE (50-150)			NZM ... 3-A (36-150)				NZM ... 3-AE (250-630)			NZM ... 3-VE (50-150)		
80	**100**	**125**	**160**	**200**	**250**	**100**	**160**	**250**	**250**	**320**	**400**	**500**	**250**	**400**	**630**	**250**	**400**	**630**
0.8	1.5	1.5	1.5	2	3	1.5	1.5	3	3	4	6	7	7.5	20	20	12.5	25	25
0.8	1.5	1.5	1.5	2	3	1.5	1.5	3	3	4	6	7	7.5	20	20	12.5	25	25
-	1.5	1.5	1.5	2	3	1.5	1.5	3	3	4	6	7	6	15	15	11	20	20
-	-	1.5	1.5	2	3	-	1.5	3	3	4	6	7	6	15	15	11	20	20
-	-	-	1.5	2	3	-	1.5	3	3	4	6	7	6	15	15	11	20	20
-	-	-	-	2	3	-	-	3	3	4	6	7	6	15	15	11	20	20
-	-	-	-	2	3	-	-	3	3	4	6	7	6	15	15	11	20	20
-	-	-	-	2.4	3	-	-	3	3.4	4	6	6.3	2.7	4.4	5	3.6	6.3	10
-	-	-	-	-	2.9	-	-	3	3.3	4	6	6.2	2.7	4.4	5	3.5	6.2	10
-	-	-	-	-	-	-	-	-	-	3.9	5.9	6	-	4.4	5	-	6	9.8
-	-	-	-	-	-	-	-	-	-	3.9	5.8	6	-	4.4	5	-	6	9.5
-	1.2	1.7	2.1	2.6	3.1	1.2	1.9	3	3.6	4.2	6	6.6	2.7	4.4	5	3.7	6.6	10
-	-	-	-	2.3	3	-	-	3	3.4	4	6	6.1	2.7	4.4	5	3.5	6.1	9.7
-	-	-	-	-	-	-	-	-	-	3.9	6	6	2.7	4.4	5	3.5	6	9.4
-	-	-	-	-	-	-	-	-	-	3.9	5.8	6	-	4.4	5	-	6	9.4
-	-	-	-	-	-	-	-	-	-	3.6	4.7	5.4	-	4.3	4.7	-	5.4	5.4
-	-	-	-	-	-	-	-	-	-	-	-	5.1	-	-	4.7	-	-	5.3
-	-	-	-	-	-	-	-	-	-	-	-	-	-	-	-	-	-	-
-	-	-	-	-	-	-	-	-	-	-	-	-	-	-	-	-	-	-
-	-	-	-	-	-	-	-	-	-	-	-	-	-	-	-	-	-	-
-	-	-	-	-	-	-	-	-	-	-	-	-	-	-	-	-	-	-
-	-	-	-	-	-	-	-	-	-	-	-	-	-	-	-	-	-	-
-	-	-	-	-	-	-	-	-	-	-	-	-	-	-	-	-	-	-
-	-	-	-	-	-	-	-	-	-	-	-	-	-	-	-	-	-	-
-	-	-	-	-	-	-	-	-	-	-	-	-	-	-	-	-	-	-
-	-	-	-	-	-	-	-	-	-	-	-	-	-	-	-	-	-	-
-	-	-	-	-	-	-	-	-	-	-	-	-	-	-	-	-	-	-

Selective Protection

	Nr of entries	Upstream		NZM ... 4-AE (50-85)				
			I_n [A]	630	800	1000	1250	1600
			$II(I_{cu})$	7560 (85kA)	9600 (85kA)	12000 (85kA)	15000 (85kA)	19200 (85kA)
PDC breakers	**PDC1 A-A**							
PDC1 A-A	PDC1 A-A	16-40	70	T	T	T	T	T
	PDC1 A-A	50	70	T	T	T	T	T
	PDC1 A-A	63	70	T	T	T	T	T
	PDC1 A-A	80	70	T	T	T	T	T
	PDC1 A-A	100	70	T	T	T	T	T
	PDC1 A-A	125	70	T	T	T	T	T
	PDC1 A-A	160	70	T	T	T	T	T
PDC2 A-A TMTU	**PDC2 A-A**							
PDC2 A-A TMTU	PDC2 A-A	125	70	T	T	T	T	T
	PDC2 A-A	160	70	T	T	T	T	T
	PDC2 A-A	200	70	T	T	T	T	T
	PDC2 A-A	250	70	T	T	T	T	T
PDC2 PXR	**PDC2 PXR**							
PDC2 PXR	PDC2 PXR	63	70	T	T	T	T	T
	PDC2 PXR	160	70	T	T	T	T	T
	PDC2 PXR	200	70	T	T	T	T	T
	PDC2 PXR	250	70	T	T	T	T	T
PDC3 A-A TMTU	**PDC3 A-A**							
PDC3 A-A TMTU	PDC3 A-A	250	70	11.4	37.6	39.3	39.3	39.3
	PDC3 A-A	400	70	11.2	35.4	38	38	38
	PDC3 A-A	500	70	11.1	31.5	37.6	37.6	37.6
	PDC3 A-A	630	70	-	30.7	37.3	37.3	37.3
PDC3 PXR	**PDC3 PXR**							
PDC3 PXR	PDC3 PXR	630	70	-	30.6	37.3	37.3	37.3
PDC4 A-A TMTU	**PDC4 A-A**							
PDC4 A-A TMTU	PDC4 A-A	800	70	-	-	18.7	25.3	25.5
PDC4 PXR	**PDC4 PXR**							
PDC4 PXR	PDC4 PXR	800	70	-	-	19.4	25.3	25.6
PDC5 PXR	**PDC5 PXR**							
PDC5 PXR	PDC5 PXR	630	100	-	T	T	T	T
	PDC5 PXR	800	100	-	-	T	T	T
	PDC5 PXR	1000	100	-	-	-	T	T
	PDC5 PXR	1250	100	-	-	-	-	T
	PDC5 PXR	1600	100	-	-	-	-	-

NZM ... 4-VE (50-85)				
630	**800**	**1000**	**1250**	**1600**
7560 (85kA)	**9600 (85kA)**	**12000 (85kA)**	**15000 (85kA)**	**19200 (85kA)**
T	T	T	T	T
T	T	T	T	T
T	T	T	T	T
T	T	T	T	T
T	T	T	T	T
T	T	T	T	T
T	T	T	T	T
T	T	T	T	T
T	T	T	T	T
T	T	T	T	T
T	T	T	T	T
T	T	T	T	T
T	T	T	T	T
T	T	T	T	T
T	T	T	T	T
11.4	37.6	39.3	39.3	39.3
11.2	35.4	38	38	38
11.1	31.5	37.6	37.6	37.6
-	30.7	37.3	37.3	37.3
-	30.6	37.3	37.3	37.3
-	-	18.7	25.3	25.5
-	-	19.4	25.3	25.6
-	T	T	T	T
-	-	T	T	T
-	-	-	T	T
-	-	-	-	T
-	-	-	-	-

Power Defense Molded Case Circuit Breaker
Selective Protection (PDC, NZM, FAZ)

Selective Protection

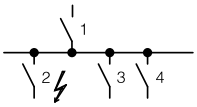

I_n Rated operational current
I_u Rated uninterrupted current
I_{cu} Rated short-circuit breaking capacity
I_i Set value non-delayed short-circuit releases

Selectivity 415 V AC
Between circuit-breakers it enables the separate discon-nec-tion of faulty system sections.
Selectivity exists between incoming circuit breaker 1 and outgoing circuit-breaker 2 if, only outgoing breaker 2 trips at position 2 during a short-circuit. System sections 3 and 4 remain operational.

Provided that the short-circuit current does not exceed those values specified ($I_{cc\ rms}$).
These details represent the limits of selec-tivity. Both circuit breakers will switch off with higher short-circuit currents.
On IZM circuit-breakers with trip units, the delay time t_{sd} must be at least 100 ms longer than the delay time of the next downstream levels (2, 3, 4).

Incoming circuit breaker（1）			**Incoming circuit breaker**											
		I_n [A]	630	630	630	800	800	800	1000	1000	1000	1250	1250	1250
		I_{cu} [KA]	42	50	65	42	50	65	42	50	65	42	50	65
		I_i [A]	7560	7560	7560	9600	9600	9600	12000	12000	12000	15000	15000	15000
Outgoing circuit breaker（2）	I_u [A]	$I_{cu2\ (415V)}$ [KA]	B	N	H	B	N	H	B	N	H	B	N	H
			Prospective short circuit current ($I_{cc\ rms}$ in kA)											
PDC1F(G)(K)(M)-TAA ...	16	25-50	T	T	T	T	T	T	T	T	T	T	T	T
	20	25-50	T	T	T	T	T	T	T	T	T	T	T	T
	25	25-50	T	T	T	T	T	T	T	T	T	T	T	T
	32	25-50	T	T	T	T	T	T	T	T	T	T	T	T
	40	25-50	T	T	T	T	T	T	T	T	T	T	T	T
	50	25-50	T	T	T	T	T	T	T	T	T	T	T	T
	63	25-50	T	T	T	T	T	T	T	T	T	T	T	T
	80	25-50	T	T	T	T	T	T	T	T	T	T	T	T
	100	25-50	T	T	T	T	T	T	T	T	T	T	T	T
	125	25-50	T	T	T	T	T	T	T	T	T	T	T	T
	160	25-50	T	T	T	T	T	T	T	T	T	T	T	T
PDC9G(K)(M)-B(D)(E)(P)) ...	63	36-70	T	T	T	T	T	T	T	T	T	T	T	T
	100	36-70	T	T	T	T	T	T	T	T	T	T	T	T
	160	36-70	T	T	T	T	T	T	T	T	T	T	T	T
PDC2F(G)(K)(N)-TAA ...	90	25-70	T	T	T	T	T	T	T	T	T	T	T	T
	125	25-70	T	T	T	T	T	T	T	T	T	T	T	T
	160	25-70	T	T	T	T	T	T	T	T	T	T	T	T
	200	25-70	T	T	T	T	T	T	T	T	T	T	T	T
	220	25-70	T	T	T	T	T	T	T	T	T	T	T	T
	250	25-70	T	T	T	T	T	T	T	T	T	T	T	T
PDC2G(N)(K)-B(D)(E)(P)) ...	160	36-70	T	T	T	T	T	T	T	T	T	T	T	T
	200	36-70	T	T	T	T	T	T	T	T	T	T	T	T
	250	36-70	T	T	T	T	T	T	T	T	T	T	T	T
PDC3F(G)(K)(N)-TAA ...	250	25-70	T	T	T	T	T	T	T	T	T	T	T	T
	320	25-70	T	T	T	T	T	T	T	T	T	T	T	T
	400	25-70	T	T	T	T	T	T	T	T	T	T	T	T
	500	25-70	T	T	T	T	T	T	T	T	T	T	T	T
	630	25-70	T	T	T	T	T	T	T	T	T	T	T	T
PDC3G(N)(K)-B(D)(E)(P) ...	250	36-70	T	T	T	T	T	T	T	T	T	T	T	T
	400	36-70	T	T	T	T	T	T	T	T	T	T	T	T
	630	36-70	-	-	-	T	T	T	T	T	T	T	T	T
PDC4F(G)(K)(N)-TAA ...	800	36-70	-	-	-	-	-	-	T	T	T	T	T	T
PDC4G(N)(K)	800	36-70	-	-	-	-	-	-	T	T	T	T	T	T
PDC5(K)(P)(H)	630	50-100	-	-	-	T	T	T	T	T	T	T	T	T
	800	50-100	-	-	-	-	-	-	T	T	T	T	T	T
	1000	50-100	-	-	-	-	-	-	-	-	-	T	T	T
	1250	50-100	-	-	-	-	-	-	-	-	-	-	-	-
	1600	50-100	-	-	-	-	-	-	-	-	-	-	-	-

Notes B = Basic switching capacity, N = Normal switching capacity, H = High switching capacity, T = Total selectivity

Incoming circuit breaker																	
1600	1600	1600	630	630	630	800	800	800	1000	1000	1000	1250	1250	1250	1600	1600	1600
42	50	65	42	50	65	42	50	65	42	50	65	42	50	65	42	50	65
19200	19200	19200	7560	7560	7560	9600	9600	9600	12000	12000	12000	15000	15000	15000	19200	19200	19200
B	N	H	B	N	H	B	N	H	B	N	H	B	N	H	B	N	H
Prospective short circuit current ($I_{cc\ rms}$ in kA)																	
T	T	T	T	T	T	T	T	T	T	T	T	T	T	T	T	T	T
T	T	T	T	T	T	T	T	T	T	T	T	T	T	T	T	T	T
T	T	T	T	T	T	T	T	T	T	T	T	T	T	T	T	T	T
T	T	T	T	T	T	T	T	T	T	T	T	T	T	T	T	T	T
T	T	T	T	T	T	T	T	T	T	T	T	T	T	T	T	T	T
T	T	T	T	T	T	T	T	T	T	T	T	T	T	T	T	T	T
T	T	T	T	T	T	T	T	T	T	T	T	T	T	T	T	T	T
T	T	T	T	T	T	T	T	T	T	T	T	T	T	T	T	T	T
T	T	T	T	T	T	T	T	T	T	T	T	T	T	T	T	T	T
T	T	T	T	T	T	T	T	T	T	T	T	T	T	T	T	T	T
T	T	T	T	T	T	T	T	T	T	T	T	T	T	T	T	T	T
T	T	T	T	T	T	T	T	T	T	T	T	T	T	T	T	T	T
T	T	T	T	T	T	T	T	T	T	T	T	T	T	T	T	T	T
T	T	T	T	T	T	T	T	T	T	T	T	T	T	T	T	T	T
T	T	T	T	T	T	T	T	T	T	T	T	T	T	T	T	T	T
T	T	T	T	T	T	T	T	T	T	T	T	T	T	T	T	T	T
T	T	T	T	T	T	T	T	T	T	T	T	T	T	T	T	T	T
T	T	T	T	T	T	T	T	T	T	T	T	T	T	T	T	T	T
T	T	T	T	T	T	T	T	T	T	T	T	T	T	T	T	T	T
T	T	T	T	T	T	T	T	T	T	T	T	T	T	T	T	T	T
T	T	T	T	T	T	T	T	T	T	T	T	T	T	T	T	T	T
T	T	T	T	T	T	T	T	T	T	T	T	T	T	T	T	T	T
T	T	T	T	T	T	T	T	T	T	T	T	T	T	T	T	T	T
T	T	T	T	T	T	T	T	T	T	T	T	T	T	T	T	T	T
T	T	T	T	T	T	T	T	T	T	T	T	T	T	T	T	T	T
T	T	T	T	T	T	T	T	T	T	T	T	T	T	T	T	T	T
T	T	T	T	T	T	T	T	T	T	T	T	T	T	T	T	T	T
T	T	T	T	T	T	T	T	T	T	T	T	T	T	T	T	T	T
T	T	T	T	T	T	T	T	T	T	T	T	T	T	T	T	T	T
T	T	T	T	T	T	T	T	T	T	T	T	T	T	T	T	T	T
T	T	T	T	T	T	T	T	T	T	T	T	T	T	T	T	T	T
T	T	T	T	T	T	T	T	T	T	T	T	T	T	T	T	T	T
T	T	T	T	T	T	T	T	T	T	T	T	T	T	T	T	T	T
T	T	T	T	-	-	-	T	T	T	T	T	T	T	T	T	T	T
T	T	T	T	-	-	-	-	-	-	T	T	T	T	T	T	T	T
T	T	T	T	-	-	-	-	-	-	T	T	T	T	T	T	T	T
T	T	T	-	-	-	T	T	T	T	T	T	T	T	T	T	T	T
T	T	T	-	-	-	-	-	-	T	T	T	T	T	T	T	T	T
T	T	T	-	-	-	-	-	-	-	-	-	T	T	T	T	T	T
T	T	T	-	-	-	-	-	-	-	-	-	-	-	-	T	T	T
-	-	-	-	-	-	-	-	-	-	-	-	-	-	-	-	-	-

Power Defense Molded Case Circuit Breaker
Selective Protection (PDC, NZM, FAZ)

Selective Protection

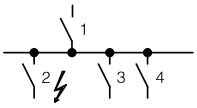

I_n Rated operational current
I_u Rated uninterrupted current
I_{cu} Rated short-circuit breaking capacity
I_i Set value non-delayed short-circuit releases

Selectivity 415 V AC
Between circuit-breakers it enables the separate discon-nec-tion of faulty system sections.
Selectivity exists between incoming circuit breaker 1 and outgoing circuit-breaker 2 if, only outgoing breaker 2 trips at position 2 during a short-circuit. System sections 3 and 4 remain operational.

Provided that the short-circuit current does not exceed those values specified ($I_{cc\ rms}$).
These details represent the limits of selec-tivity. Both circuit breakers will switch off with higher short-circuit currents.
On IZM circuit-breakers with trip units, the delay time t_{sd} must be at least 100 ms longer than the delay time of the next downstream levels (2, 3, 4).

Incoming circuit breaker（1）			**Incoming circuit breaker**											
		I_n [A]	800	800	800	1000	1000	1000	1250	1250	1250	1600	1600	1600
		I_{cu} [KA]	66	85	100	66	85	100	66	85	100	66	85	100
		I_i [A]	11200	11200	11200	14000	14000	14000	17500	17500	17500	19200	19200	19200
Outgoing circuit breaker（2）	I_u [A]	$I_{cu2\ (415V)}$ [KA]	B	N	H	B	N	H	B	N	H	B	N	H
			Prospective short circuit current ($I_{cc\ rms}$ in kA）											
PDC1F(G)(K)(M) -TAA ...	16	25-50	T	T	T	T	T	T	T	T	T	T	T	T
	20	25-50	T	T	T	T	T	T	T	T	T	T	T	T
	25	25-50	T	T	T	T	T	T	T	T	T	T	T	T
	32	25-50	T	T	T	T	T	T	T	T	T	T	T	T
	40	25-50	T	T	T	T	T	T	T	T	T	T	T	T
	50	25-50	T	T	T	T	T	T	T	T	T	T	T	T
	63	25-50	T	T	T	T	T	T	T	T	T	T	T	T
	80	25-50	T	T	T	T	T	T	T	T	T	T	T	T
	100	25-50	T	T	T	T	T	T	T	T	T	T	T	T
	125	25-50	T	T	T	T	T	T	T	T	T	T	T	T
	160	25-50	T	T	T	T	T	T	T	T	T	T	T	T
PDC9G(K)(M) -B(D)(E)(P)) ...	63	36-70	T	T	T	T	T	T	T	T	T	T	T	T
	100	36-70	T	T	T	T	T	T	T	T	T	T	T	T
	160	36-70	T	T	T	T	T	T	T	T	T	T	T	T
PDC2F(G)(K)(N) -TAA ...	90	25-70	T	T	T	T	T	T	T	T	T	T	T	T
	125	25-70	T	T	T	T	T	T	T	T	T	T	T	T
	160	25-70	T	T	T	T	T	T	T	T	T	T	T	T
	200	25-70	T	T	T	T	T	T	T	T	T	T	T	T
	220	25-70	T	T	T	T	T	T	T	T	T	T	T	T
	250	25-70	T	T	T	T	T	T	T	T	T	T	T	T
PDC2G(N)(K) -B(D)(E)(P)) ...	160	36-70	T	T	T	T	T	T	T	T	T	T	T	T
	200	36-70	T	T	T	T	T	T	T	T	T	T	T	T
	250	36-70	T	T	T	T	T	T	T	T	T	T	T	T
PDC3F(G)(K)(N) -TAA ...	250	25-70	T	T	T	T	T	T	T	T	T	T	T	T
	320	25-70	T	T	T	T	T	T	T	T	T	T	T	T
	400	25-70	T	T	T	T	T	T	T	T	T	T	T	T
	500	25-70	T	T	T	T	T	T	T	T	T	T	T	T
	630	25-70	T	T	T	T	T	T	T	T	T	T	T	T
PDC3G(N)(K) -B(D)(E)(P)) ...	250	36-70	T	T	T	T	T	T	T	T	T	T	T	T
	400	36-70	T	T	T	T	T	T	T	T	T	T	T	T
	630	36-70	T	T	T	T	T	T	T	T	T	T	T	T
PDC4F(G)(K)(N) -TAA ...	800	36-70	-	-	-	T	T	T	T	T	T	T	T	T
PDC3G(N)(K)	800	36-70	-	-	-	T	T	T	T	T	T	T	T	T
PDC5(K)(P)(H)	630	50-100	T	T	T	T	T	T	T	T	T	T	T	T
	800	50-100	-	-	-	T	T	T	T	T	T	T	T	T
	1000	50-100	-	-	-	-	-	-	T	T	T	T	T	T
	1250	50-100	-	-	-	-	-	-	-	-	-	T	T	T
	1600	50-100	-	-	-	-	-	-	-	-	-	-	-	-

Notes B = Basic switching capacity, N = Normal switching capacity, H = High switching capacity, T = Total selectivity

Incoming circuit breaker								
2000	2000	2000	2500	2500	2500	3200	3200	3200
66	85	100	66	85	100	66	85	100
24000	24000	24000	30000	30000	30000	32000	32000	32000
B	N	H	B	N	H	B	N	H
Prospective short circuit current ($I_{cc\ rms}$ in kA)								
T	T	T	T	T	T	T	T	T
T	T	T	T	T	T	T	T	T
T	T	T	T	T	T	T	T	T
T	T	T	T	T	T	T	T	T
T	T	T	T	T	T	T	T	T
T	T	T	T	T	T	T	T	T
T	T	T	T	T	T	T	T	T
T	T	T	T	T	T	T	T	T
T	T	T	T	T	T	T	T	T
T	T	T	T	T	T	T	T	T
T	T	T	T	T	T	T	T	T
T	T	T	T	T	T	T	T	T
T	T	T	T	T	T	T	T	T
T	T	T	T	T	T	T	T	T
T	T	T	T	T	T	T	T	T
T	T	T	T	T	T	T	T	T
T	T	T	T	T	T	T	T	T
T	T	T	T	T	T	T	T	T
T	T	T	T	T	T	T	T	T
T	T	T	T	T	T	T	T	T
T	T	T	T	T	T	T	T	T
T	T	T	T	T	T	T	T	T
T	T	T	T	T	T	T	T	T
T	T	T	T	T	T	T	T	T
T	T	T	T	T	T	T	T	T
T	T	T	T	T	T	T	T	T
T	T	T	T	T	T	T	T	T
T	T	T	T	T	T	T	T	T
T	T	T	T	T	T	T	T	T
T	T	T	T	T	T	T	T	T
T	T	T	T	T	T	T	T	T
T	T	T	T	T	T	T	T	T
T	T	T	T	T	T	T	T	T
T	T	T	T	T	T	T	T	T
T	T	T	T	T	T	T	T	T
T	T	T	T	T	T	T	T	T
T	T	T	T	T	T	T	T	T
T	T	T	T	T	T	T	T	T
T	T	T	T	T	T	T	T	T
T	T	T	T	T	T	T	T	T
T	T	T	T	T	T	T	T	T
T	T	T	T	T	T	T	T	T
T	T	T	T	T	T	T	T	T
T	T	T	T	T	T	T	T	T
T	T	T	T	T	T	T	T	T
T	T	T	T	T	T	T	T	T
T	T	T	T	T	T	T	T	T
T	T	T	T	T	T	T	T	T
T	T	T	T	T	T	T	T	T
T	T	T	T	T	T	T	T	T
T	T	T	T	T	T	T	T	T
T	T	T	T	T	T	T	T	T
T	T	T	T	T	T	T	T	T
T	T	T	T	T	T	T	T	T
T	T	T	T	T	T	T	T	T
T	T	T	T	T	T	T	T	T
T	T	T	T	T	T	T	T	T
T	T	T	T	T	T	T	T	T
T	T	T	T	T	T	T	T	T
T	T	T	T	T	T	T	T	T
T	T	T	T	T	T	T	T	T
T	T	T	T	T	T	T	T	T
T	T	T	T	T	T	T	T	T
T	T	T	T	T	T	T	T	T
T	T	T	T	T	T	T	T	T
T	T	T	T	T	T	T	T	T
T	T	T	T	T	T	T	T	T
T	T	T	T	T	T	T	T	T
T	T	T	T	T	T	T	T	T
T	T	T	T	T	T	T	T	T
T	T	T	T	T	T	T	T	T
T	T	T	T	T	T	T	T	T
T	T	T	T	T	T	T	T	T

Power Defense Molded Case Circuit Breaker
Selective Protection (PDC, NZM, FAZ)

Selective Protection

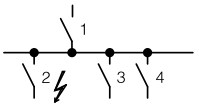

I_n Rated operational current
I_u Rated uninterrupted current
I_{cu} Rated short-circuit breaking capacity
I_i Set value non-delayed short-circuit releases

Selectivity 415 V AC
Between circuit-breakers it enables the separate discon-nec-tion of faulty system sections.
Selectivity exists between incoming circuit breaker 1 and outgoing circuit-breaker 2 if, only outgoing breaker 2 trips at position 2 during a short-circuit. System sections 3 and 4 remain operational.

Provided that the short-circuit current does not exceed those values specified ($I_{cc\ rms}$).
These details represent the limits of selec-tivity. Both circuit breakers will switch off with higher short-circuit currents.
On IZM circuit-breakers with trip units, the delay time t_{sd} must be at least 100 ms longer than the delay time of the next downstream levels (2, 3, 4).

Incoming circuit breaker（1）			**Incoming circuit breaker**											
		I_n [A]	800	800	800	1000	1000	1000	1250	1250	1250	1600	1600	1600
		I_{cu} [KA]	66	85	100	66	85	100	66	85	100	66	85	100
		I_i [A]	11200	11200	11200	14000	14000	14000	17500	17500	17500	19200	19200	19200
Outgoing circuit breaker（2）	I_u [A]	$I_{cu2\ (415V)}$ [KA]	B	N	H	B	N	H	B	N	H	B	N	H
			Prospective short circuit current ($I_{cc\ rms}$ in kA）											
PDC1F(G)(K)(M) -TAA ...	16	25-50	T	T	T	T	T	T	T	T	T	T	T	T
	20	25-50	T	T	T	T	T	T	T	T	T	T	T	T
	25	25-50	T	T	T	T	T	T	T	T	T	T	T	T
	32	25-50	T	T	T	T	T	T	T	T	T	T	T	T
	40	25-50	T	T	T	T	T	T	T	T	T	T	T	T
	50	25-50	T	T	T	T	T	T	T	T	T	T	T	T
	63	25-50	T	T	T	T	T	T	T	T	T	T	T	T
	80	25-50	T	T	T	T	T	T	T	T	T	T	T	T
	100	25-50	T	T	T	T	T	T	T	T	T	T	T	T
	125	25-50	T	T	T	T	T	T	T	T	T	T	T	T
	160	25-50	T	T	T	T	T	T	T	T	T	T	T	T
PDC9G(K)(M) -B(D)(E)(P)) ...	63	36-70	T	T	T	T	T	T	T	T	T	T	T	T
	100	36-70	T	T	T	T	T	T	T	T	T	T	T	T
	160	36-70	T	T	T	T	T	T	T	T	T	T	T	T
PDC2F(G)(K)(N) -TAA ...	90	25-70	T	T	T	T	T	T	T	T	T	T	T	T
	125	25-70	T	T	T	T	T	T	T	T	T	T	T	T
	160	25-70	T	T	T	T	T	T	T	T	T	T	T	T
	200	25-70	T	T	T	T	T	T	T	T	T	T	T	T
	220	25-70	T	T	T	T	T	T	T	T	T	T	T	T
	250	25-70	T	T	T	T	T	T	T	T	T	T	T	T
PDC2G(N)(K) -B(D)(E)(P)) ...	160	36-70	T	T	T	T	T	T	T	T	T	T	T	T
	200	36-70	T	T	T	T	T	T	T	T	T	T	T	T
	250	36-70	T	T	T	T	T	T	T	T	T	T	T	T
PDC3F(G)(K)(N) -TAA ...	250	25-70	T	T	T	T	T	T	T	T	T	T	T	T
	320	25-70	T	T	T	T	T	T	T	T	T	T	T	T
	400	25-70	T	T	T	T	T	T	T	T	T	T	T	T
	500	25-70	T	T	T	T	T	T	T	T	T	T	T	T
	630	25-70	T	T	T	T	T	T	T	T	T	T	T	T
PDC3G(N)(K) -B(D)(E)(P)) ...	250	36-70	T	T	T	T	T	T	T	T	T	T	T	T
	400	36-70	T	T	T	T	T	T	T	T	T	T	T	T
	630	36-70	T	T	T	T	T	T	T	T	T	T	T	T
PDC4F(G)(K)(N) -TAA ...	800	36-70	-	-	-	T	T	T	T	T	T	T	T	T
PDC3G(N)(K)	800	36-70	-	-	-	T	T	T	T	T	T	T	T	T
PDC5(K)(P)(H)	630	50-100	T	T	T	T	T	T	T	T	T	T	T	T
	800	50-100	-	-	-	T	T	T	T	T	T	T	T	T
	1000	50-100	-	-	-	-	-	-	T	T	T	T	T	T
	1250	50-100	-	-	-	-	-	-	-	-	-	T	T	T
	1600	50-100	-	-	-	-	-	-	-	-	-	-	-	-

Notes B = Basic switching capacity, N = Normal switching capacity, H = High switching capacity, T = Total selectivity

Incoming circuit breaker								
2000	2000	2000	2500	2500	2500	3200	3200	3200
66	85	100	66	85	100	66	85	100
24000	24000	24000	30000	30000	30000	32000	32000	32000
B	N	H	B	N	H	B	N	H
Prospective short circuit current ($I_{cc\ rms}$ in kA)								
T	T	T	T	T	T	T	T	T
T	T	T	T	T	T	T	T	T
T	T	T	T	T	T	T	T	T
T	T	T	T	T	T	T	T	T
T	T	T	T	T	T	T	T	T
T	T	T	T	T	T	T	T	T
T	T	T	T	T	T	T	T	T
T	T	T	T	T	T	T	T	T
T	T	T	T	T	T	T	T	T
T	T	T	T	T	T	T	T	T
T	T	T	T	T	T	T	T	T
T	T	T	T	T	T	T	T	T
T	T	T	T	T	T	T	T	T
T	T	T	T	T	T	T	T	T
T	T	T	T	T	T	T	T	T
T	T	T	T	T	T	T	T	T
T	T	T	T	T	T	T	T	T
T	T	T	T	T	T	T	T	T
T	T	T	T	T	T	T	T	T
T	T	T	T	T	T	T	T	T
T	T	T	T	T	T	T	T	T
T	T	T	T	T	T	T	T	T
T	T	T	T	T	T	T	T	T
T	T	T	T	T	T	T	T	T
T	T	T	T	T	T	T	T	T
T	T	T	T	T	T	T	T	T
T	T	T	T	T	T	T	T	T
T	T	T	T	T	T	T	T	T
T	T	T	T	T	T	T	T	T
T	T	T	T	T	T	T	T	T
T	T	T	T	T	T	T	T	T
T	T	T	T	T	T	T	T	T
T	T	T	T	T	T	T	T	T
T	T	T	T	T	T	T	T	T
T	T	T	T	T	T	T	T	T
T	T	T	T	T	T	T	T	T
T	T	T	T	T	T	T	T	T
T	T	T	T	T	T	T	T	T
T	T	T	T	T	T	T	T	T
T	T	T	T	T	T	T	T	T
T	T	T	T	T	T	T	T	T
T	T	T	T	T	T	T	T	T
T	T	T	T	T	T	T	T	T
T	T	T	T	T	T	T	T	T
T	T	T	T	T	T	T	T	T
T	T	T	T	T	T	T	T	T
T	T	T	T	T	T	T	T	T
T	T	T	T	T	T	T	T	T
T	T	T	T	T	T	T	T	T
T	T	T	T	T	T	T	T	T
T	T	T	T	T	T	T	T	T
T	T	T	T	T	T	T	T	T
T	T	T	T	T	T	T	T	T
T	T	T	T	T	T	T	T	T
T	T	T	T	T	T	T	T	T
T	T	T	T	T	T	T	T	T
T	T	T	T	T	T	T	T	T
T	T	T	T	T	T	T	T	T
T	T	T	T	T	T	T	T	T
T	T	T	T	T	T	T	T	T
T	T	T	T	T	T	T	T	T
T	T	T	T	T	T	T	T	T
T	T	T	T	T	T	T	T	T
T	T	T	T	T	T	T	T	T
T	T	T	T	T	T	T	T	T
T	T	T	T	T	T	T	T	T
T	T	T	T	T	T	T	T	T
T	T	T	T	T	T	T	T	T
T	T	T	T	T	T	T	T	T
T	T	T	T	T	T	T	T	T
T	T	T	T	T	T	T	T	T
T	T	T	T	T	T	T	T	T
T	T	T	T	T	T	T	T	T
T	T	T	T	T	T	T	T	T
T	T	T	T	T	T	T	T	T
T	T	T	T	T	T	T	T	T
T	T	T	T	T	T	T	T	T

Power Defense Molded Case Circuit Breaker
Selective Protection (PDC, NZM, FAZ)

Selective Protection

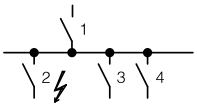

I_n Rated operational current
I_u Rated uninterrupted current
I_{cu} Rated short-circuit breaking capacity
I_i Set value non-delayed short-circuit releases

Selectivity 415 V AC
Between circuit-breakers it enables the separate discon-nec-tion of faulty system sections.
Selectivity exists between incoming circuit breaker 1 and outgoing circuit-breaker 2 if, only outgoing breaker 2 trips at position 2 during a short-circuit. System sections 3 and 4 remain operational.

Provided that the short-circuit current does not exceed those values specified ($I_{cc\ rms}$).
These details represent the limits of selec-tivity. Both circuit breakers will switch off with higher short-circuit currents.
On IZM circuit-breakers with trip units, the delay time t_{sd} must be at least 100 ms longer than the delay time of the next downstream levels (2, 3, 4).

Incoming circuit breaker（1）			**IZM99...-V**						**IZM99...-U**					
		I_n [A]	4000	4000	5000	5000	6300	6300	4000	4000	5000	5000	6300	6300
		I_{cu} [KA]	85	100	85	100	85	100	85	100	85	100	85	100
		I_i [A]	48000	48000	60000	60000	63000	63000	48000	48000	60000	60000	63000	63000
Outgoing circuit breaker（2）	I_u [A]	$I_{cu2\ (415V)}$ [KA]	N	H	N	H	N	H	N	H	N	H	N	H
			Prospective short circuit current ($I_{cc\ rms}$ in kA)											
PDC1F(G)(K)(M) -TAA ...	16	25-50	T	T	T	T	T	T	T	T	T	T	T	T
	20	25-50	T	T	T	T	T	T	T	T	T	T	T	T
	25	25-50	T	T	T	T	T	T	T	T	T	T	T	T
	32	25-50	T	T	T	T	T	T	T	T	T	T	T	T
	40	25-50	T	T	T	T	T	T	T	T	T	T	T	T
	50	25-50	T	T	T	T	T	T	T	T	T	T	T	T
	63	25-50	T	T	T	T	T	T	T	T	T	T	T	T
	80	25-50	T	T	T	T	T	T	T	T	T	T	T	T
	100	25-50	T	T	T	T	T	T	T	T	T	T	T	T
	125	25-50	T	T	T	T	T	T	T	T	T	T	T	T
	160	25-50	T	T	T	T	T	T	T	T	T	T	T	T
PDC9G(K)(M) -B(D)(E)(P)) ...	63	36-70	T	T	T	T	T	T	T	T	T	T	T	T
	100	36-70	T	T	T	T	T	T	T	T	T	T	T	T
	160	36-70	T	T	T	T	T	T	T	T	T	T	T	T
PDC2F(G)(K)(N) -TAA ...	90	25-70	T	T	T	T	T	T	T	T	T	T	T	T
	125	25-70	T	T	T	T	T	T	T	T	T	T	T	T
	160	25-70	T	T	T	T	T	T	T	T	T	T	T	T
	200	25-70	T	T	T	T	T	T	T	T	T	T	T	T
	220	25-70	T	T	T	T	T	T	T	T	T	T	T	T
	250	25-70	T	T	T	T	T	T	T	T	T	T	T	T
PDC2G(N)(K) -B(D)(E)(P)) ...	160	36-70	T	T	T	T	T	T	T	T	T	T	T	T
	200	36-70	T	T	T	T	T	T	T	T	T	T	T	T
	250	36-70	T	T	T	T	T	T	T	T	T	T	T	T
PDC3F(G)(K)(N) -TAA ...	250	25-70	T	T	T	T	T	T	T	T	T	T	T	T
	320	25-70	T	T	T	T	T	T	T	T	T	T	T	T
	400	25-70	T	T	T	T	T	T	T	T	T	T	T	T
	500	25-70	T	T	T	T	T	T	T	T	T	T	T	T
	630	25-70	T	T	T	T	T	T	T	T	T	T	T	T
PDC3G(N)(K) -B(D)(E)(P)) ...	250	36-70	T	T	T	T	T	T	T	T	T	T	T	T
	400	36-70	T	T	T	T	T	T	T	T	T	T	T	T
	630	36-70	T	T	T	T	T	T	T	T	T	T	T	T
PDC4F(G)(K)(N) -TAA ...	800	36-70	T	T	T	T	T	T	T	T	T	T	T	T
PDC3G(N)(K)	800	36-70	T	T	T	T	T	T	T	T	T	T	T	T
PDC5(K)(P)(H)	630	50-100	T	T	T	T	T	T	T	T	T	T	T	T
	800	50-100	T	T	T	T	T	T	T	T	T	T	T	T
	1000	50-100	T	T	T	T	T	T	T	T	T	T	T	T
	1250	50-100	T	T	T	T	T	T	T	T	T	T	T	T
	1600	50-100	T	T	T	T	T	T	T	T	T	T	T	T

Notes B = Basic switching capacity, N = Normal switching capacity, H = High switching capacity, T = Total selectivity

I Dimensions I

Circuit Breaker's Basic Device

3P

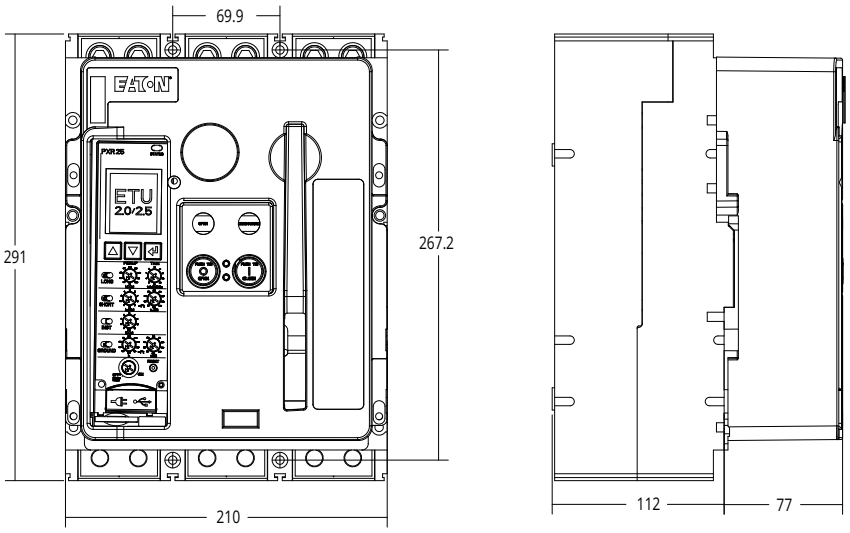

4P

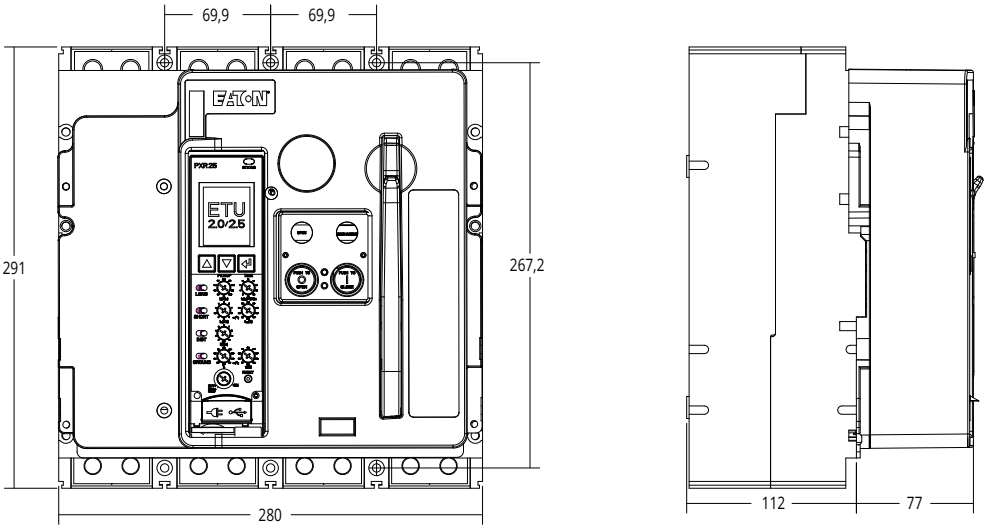

Circuit Breaker's Accessories

Phase barrier 100 3P

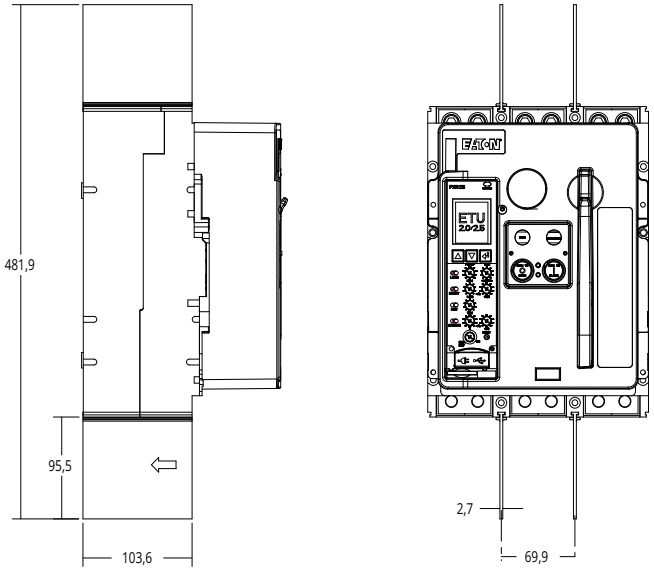

Phase barrier 100 4P

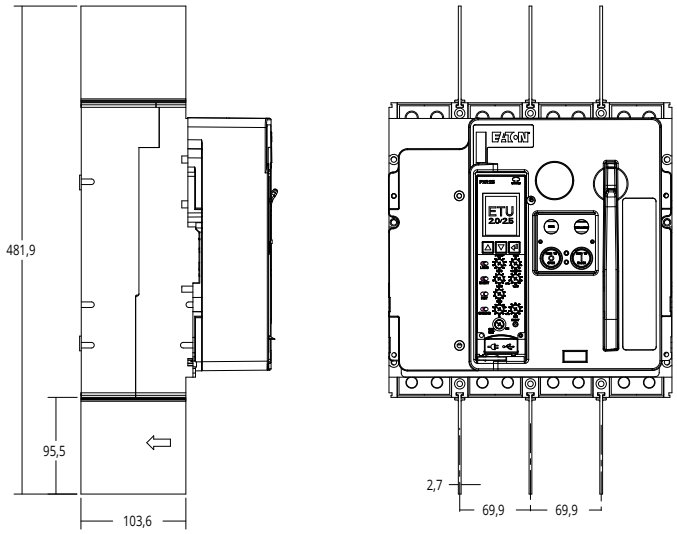

Circuit Breaker's Accessories

Phase barrier 200 3P

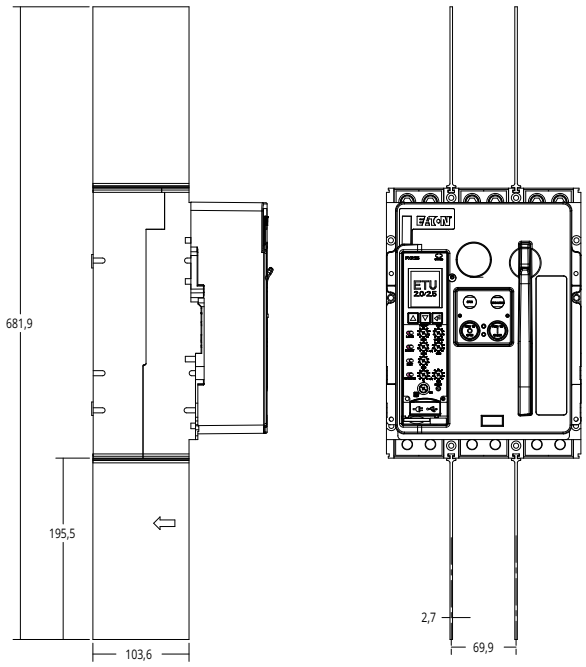

Phase barrier 200 4P

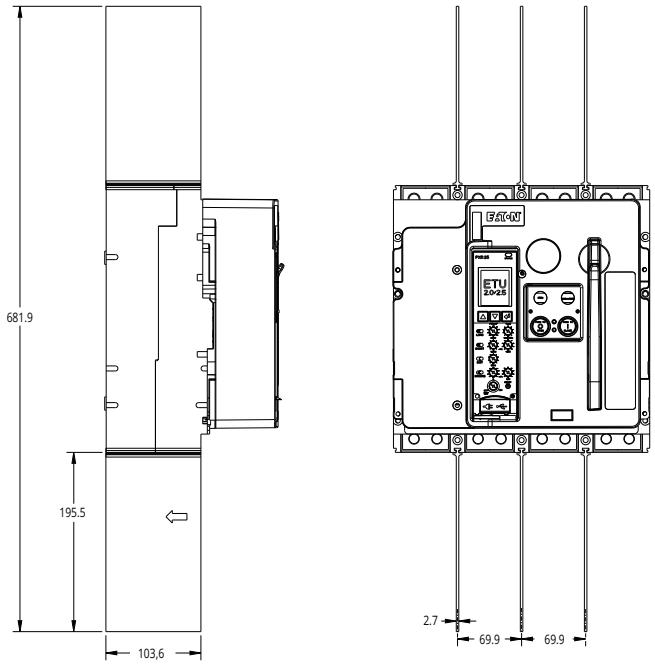

Circuit Breaker's Accessories

95MM phase spacing extended board 3P

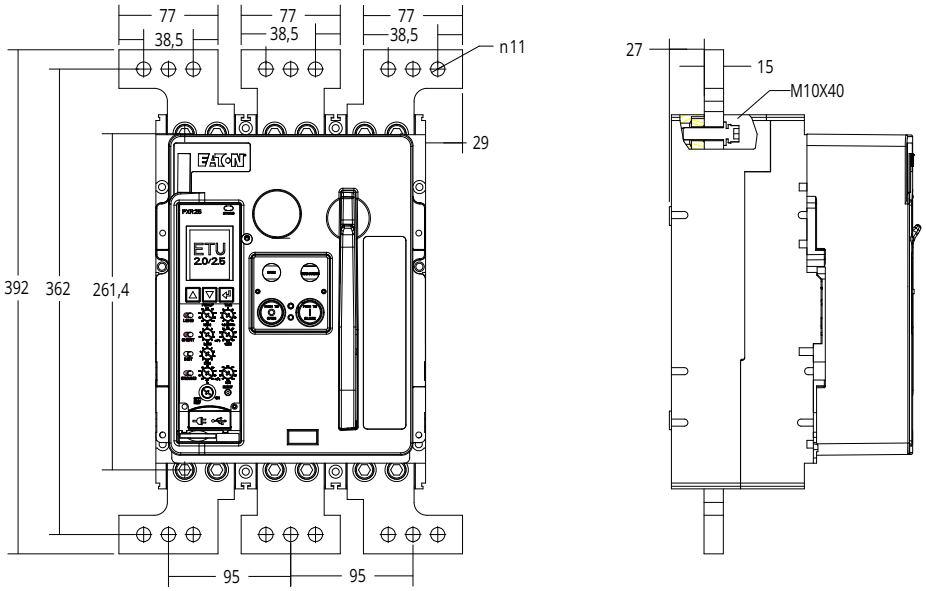

95MM spacing extended board 4P

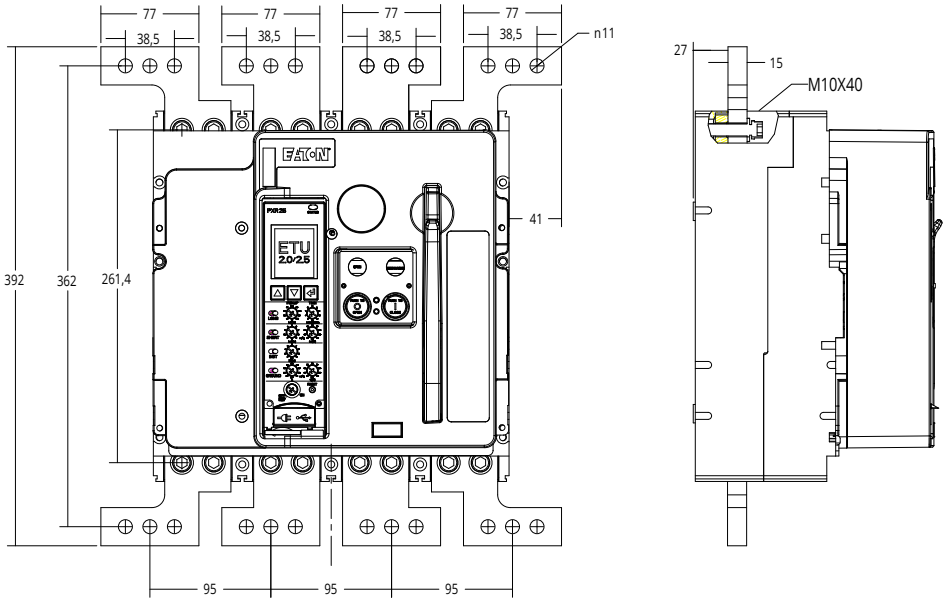

Circuit Breaker's Accessories

116MM spacing extended board 3P

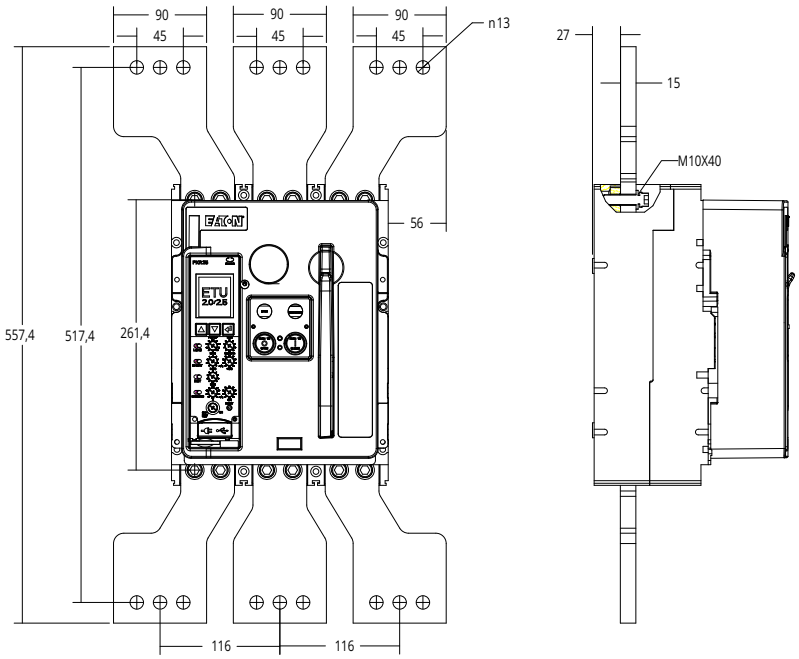

116MM spacing extended board 4P

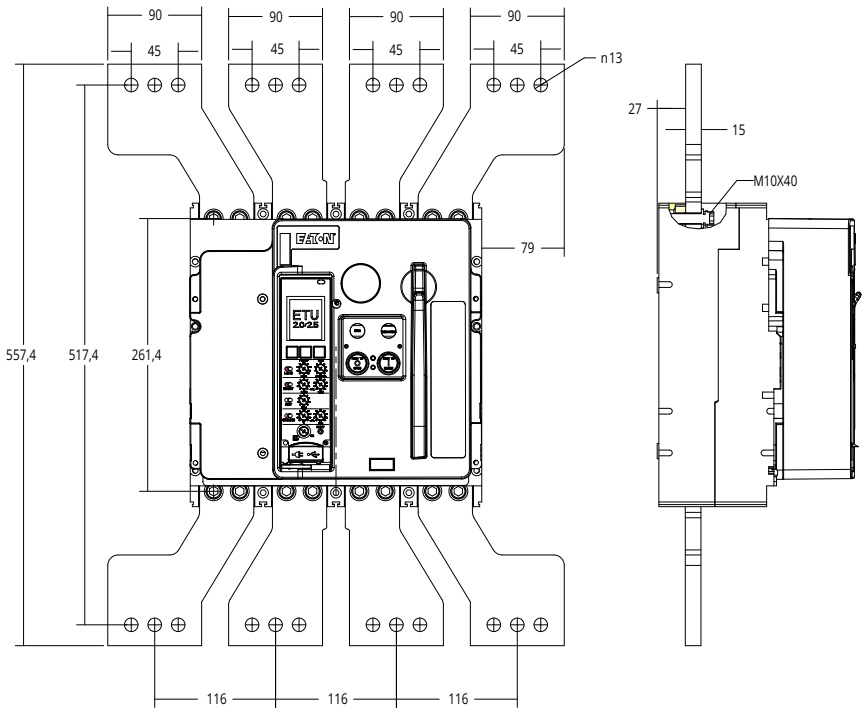

OFF Position Safety Lock

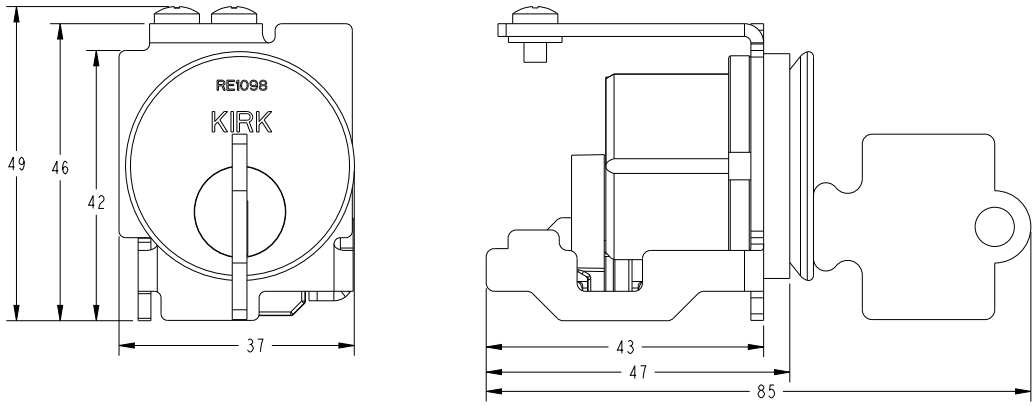

Fixed Type Door Escutcheon

Cabinet door cutout dimensions

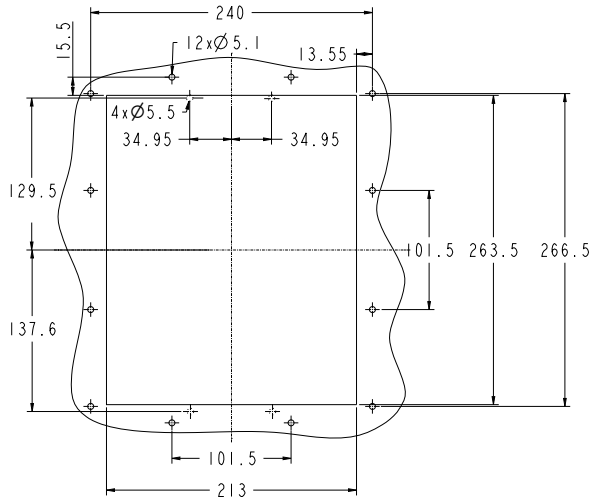

Lock Bracket

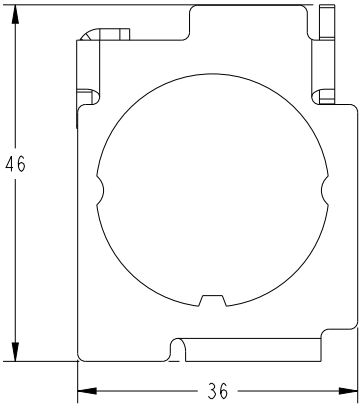

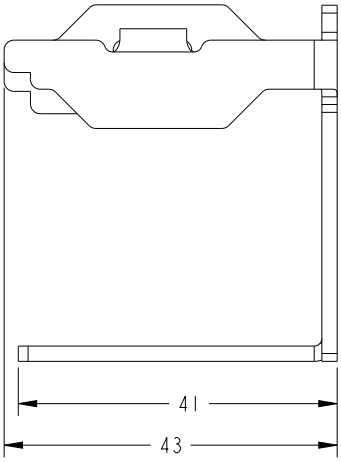

Communication Module

Operations Counter

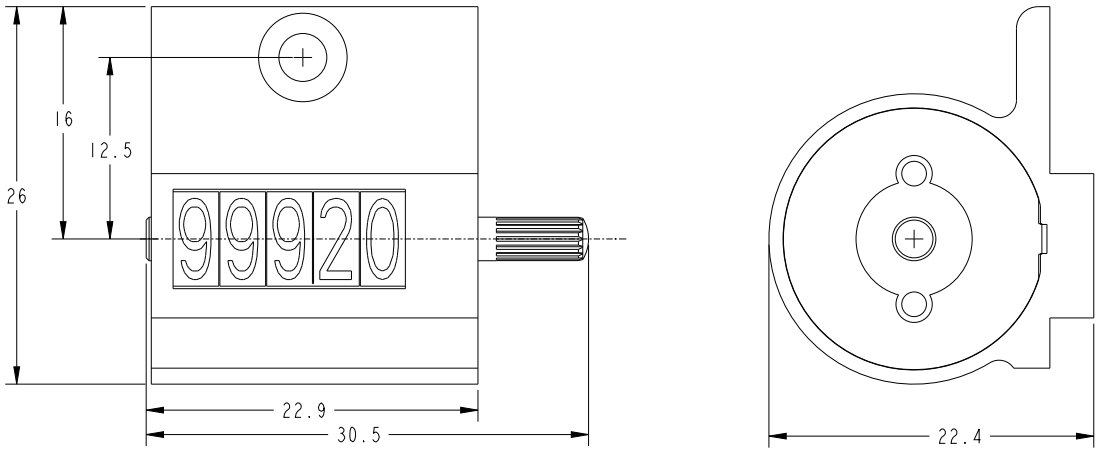

Power Module

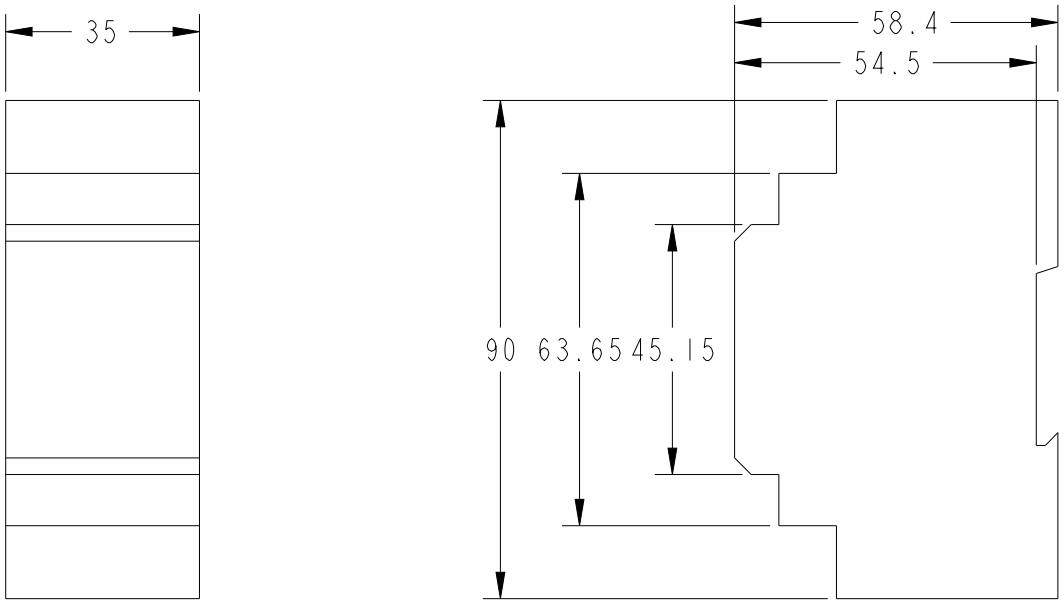

Button Cover

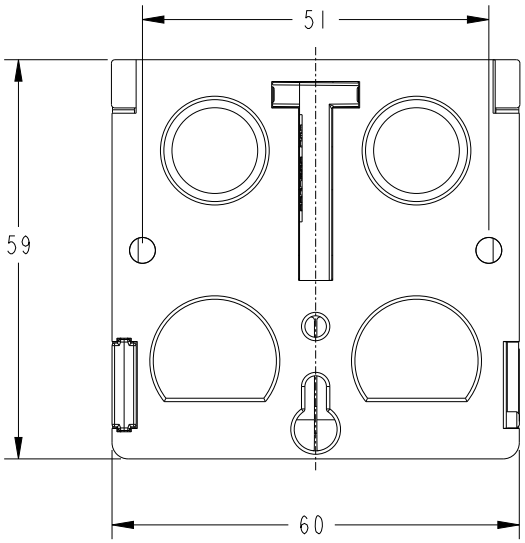

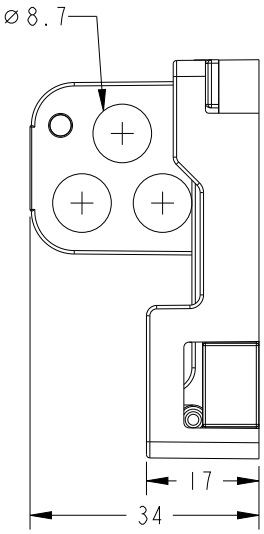

Motor Operator

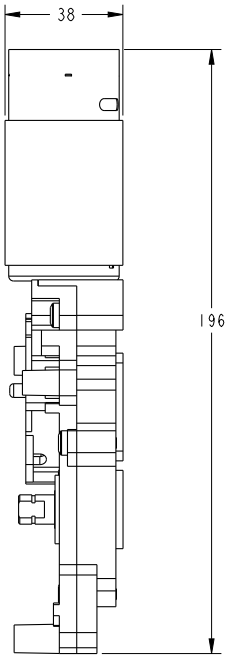

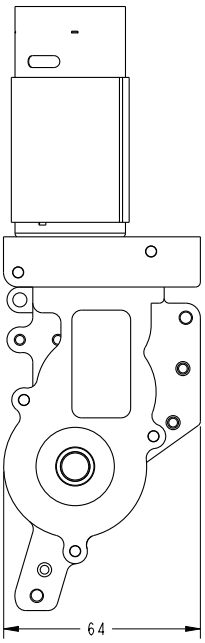

Eaton is an intelligent power management company dedicated to improving the quality of life and protecting the environment for people everywhere. We are guided by our commitment to do business right, to operate sustainably and to help our customers manage power - today and well into the future. By capitalizing on the global growth trends of electrification and digitalization, we ' re accelerating the planet ' s transition to renewable energy, helping to solve the world ' s most urgent power management challenges, and doing what ' s best for our stakeholders and all of society.

Eaton was founded in 1911 and has been listed on the New York Stock Exchange for over a century. We reported revenues of $23.2 billion in 2023 and serve customers in more than 160 countries. Eaton entered the Chinese market in 1993 and has grown significantly since then. In 2004, Eaton moved its Asia-Pacific headquarters from Hong Kong to Shanghai. Today, Eaton has nearly 8,000 employees and 19 manufacturing facilities in China.

For more information about Eaton China, visit **www.eaton.com.cn**
Follow Eaton China WeChat account: **Eaton_China**

Eaton
Asia Pacific Headquarters
No.3, Lane 280, Linhong Road,
Shanghai 200335, P.R. China
www.eaton.com.cn/electrical

© 2025 Eaton
All rights reserved to interpret and modify the catalogue without notice.
Public No:Power Defense
8th August,2025

Customer Service Center
Contact: 800-988-1203
400-921-0826
Working hours:
09:00-17:00 (Mon-Fri)

Technical service email:
TechCareCPCD@Eaton.com

Scan the above QR code and follow "伊顿电气官方" through Wechat

Powering Business Worldwide